This is a digital copy of a book that was preserved for generations on library shelves before it was carefully scanned by Google as part of a project to make the world's books discoverable online.

It has survived long enough for the copyright to expire and the book to enter the public domain. A public domain book is one that was never subject to copyright or whose legal copyright term has expired. Whether a book is in the public domain may vary country to country. Public domain books are our gateways to the past, representing a wealth of history, culture and knowledge that's often difficult to discover.

Marks, notations and other marginalia present in the original volume will appear in this file - a reminder of this book's long journey from the publisher to a library and finally to you.

Usage guidelines

Google is proud to partner with libraries to digitize public domain materials and make them widely accessible. Public domain books belong to the public and we are merely their custodians. Nevertheless, this work is expensive, so in order to keep providing this resource, we have taken steps to prevent abuse by commercial parties, including placing technical restrictions on automated querying.

We also ask that you:

+ *Make non-commercial use of the files* We designed Google Book Search for use by individuals, and we request that you use these files for personal, non-commercial purposes.
+ *Refrain from automated querying* Do not send automated queries of any sort to Google's system: If you are conducting research on machine translation, optical character recognition or other areas where access to a large amount of text is helpful, please contact us. We encourage the use of public domain materials for these purposes and may be able to help.
+ *Maintain attribution* The Google "watermark" you see on each file is essential for informing people about this project and helping them find additional materials through Google Book Search. Please do not remove it.
+ *Keep it legal* Whatever your use, remember that you are responsible for ensuring that what you are doing is legal. Do not assume that just because we believe a book is in the public domain for users in the United States, that the work is also in the public domain for users in other countries. Whether a book is still in copyright varies from country to country, and we can't offer guidance on whether any specific use of any specific book is allowed. Please do not assume that a book's appearance in Google Book Search means it can be used in any manner anywhere in the world. Copyright infringement liability can be quite severe.

About Google Book Search

Google's mission is to organize the world's information and to make it universally accessible and useful. Google Book Search helps readers discover the world's books while helping authors and publishers reach new audiences. You can search through the full text of this book on the web at `http://books.google.com/`

TRANSPORTATION
LIBRARY
TF
240
.R65

A 757,581 DUPL

TRANSPORTATION LIBRARY

Gift
Edwy Taylor
3-3-38

Transportation
Library
TF
240
.R65

TRANSPORTATION LIBRARY

Gift
Edwy Taylor
3-3-38

Transportation
Library
TF
240
.R65

TRACK FORMULÆ AND TABLES

TRACK FORMULÆ AND TABLES

A HANDBOOK

OF THE THEORY AND PRACTICE OF TURNOUTS AND TRACK CONNECTIONS

WITH USEFUL TABLES ORIGINAL AND SELECTED FOR THE USE OF STUDENTS AND ENGINEERS IN THE CLASSROOM, OFFICE AND FIELD

BY

SHELBY SAUFLEY ROBERTS, C. E.

MEMBER AMERICAN SOCIETY OF CIVIL ENGINEERS; MEMBER AMERICAN RAILWAY ENGINEERING AND MAINTENANCE OF WAY ASSOCIATION

TRANSPORTATION LIBRARY

FIRST EDITION

FIRST THOUSAND

NEW YORK

JOHN WILEY & SONS

LONDON: CHAPMAN & HALL, LIMITED

1910

COPYRIGHT, 1910
BY
SHELBY SAUFLEY ROBERTS

Stanhope Press
F. H. GILSON COMPANY
BOSTON, U.S.A.

PREFACE

No attempt has been made in this book to enter upon the discussion of the theory of railroad curves. It is assumed that the engineer intrusted with the design or staking out of tracks and the student will have previously acquired this information.

The purpose of the book is to present in a practical manner those track problems most frequently met in actual practice, supplemented by time-saving tables in connection therewith and other tables of assistance in estimating.

Doubtless other engineers in their practice have developed and made use of some, possibly all, of the formulæ demonstrated herein. However, with the exception of problem 1 and problem 4, the author has never seen any of them in print or use prior to his development of them.

The formulæ are based on the actual properties of the frog and split switch. Most of them were worked out in the field and have therefore been tested in actual practice and have been found to give results which, when expressed in "hubs" on the ground, are capable of being followed by track foremen to obtain track connections that fit without "fudging."

The necessity of considering the frog and switch rail straight is readily apparent in calculating switch leads. The necessity of working from the heel of the frog is quite as apparent in crowded yard and terminal work, where it is desired to use the maximum permissible degree of curve tangent to the heel of the frog, and wherever economy of space is of the essence of the work.

Where the degree of the curve tangent to the heel of the frog is light, the curve long, and where there is latitude in the location of the frog, the above consideration is not so essential.

In all cases to consider the frog and switch rail straight, as they are made, is correct and as convenient for calculation as

to neglect it. Throughout the author has held to this principle and, after developing the formulæ for switch leads, has ceased to consider the leads and has worked from the heel of the frog, giving the location of the theoretical point of frog referred to the distance measured along the center line of the principal or main track from the point of intersection with the center line of the track with which the connection is to be made.

The author believes a strict adherence to the principles involved, if not to the formulæ themselves, will result in better track work than some to be found on almost any of the railroads of the country.

The author wishes to acknowledge here his indebtedness to W. P. Cronican, W. G. Nusz and C. B. Penick, Assistant Engineers with the Illinois Central Railroad, for assistance rendered in the construction of sketches for illustration and in checking the computation of tables. Of others, from whom certain tables were obtained, special mention will be made later.

SHELBY S. ROBERTS.

LOUISVILLE, KY.,
March, 1910.

TABLE OF CONTENTS

CHAPTER I

FROGS AND SPLIT SWITCHES

	PAGE
Frogs.	
Description of parts	1
Angle	1
Number	1, 2
Distance from point to intersection of center lines	2
Distance on rail from point to intersection of rail and center line	3
Simple Turnouts	
Length of switch lead	4
Radius and degree of lead curve	4
Length of outer or curved rail	4
Length of straight rail	4
Summary	7
Coördinates of outer or curved rail	8
Approximate formulæ	14
Lengthening and Shortening Switch Leads	
Corrections where lead is lengthened	10
Corrections where lead is shortened	12
Switch Leads on Curves	14
Switch Stands	14
Slip Switches	
Location of frogs	16
Radius and degree of lead curve	17
Three-throw and Tandem Switches	18
Angle of crotch frog, standard frogs fixed	20
Angle of crotch frog, switch rails fixed	24
To locate point of crotch frog	27
Length of leads, radii and degree of lead curves	27

CHAPTER II

TURNOUTS INTO DIVERGING TRACKS

Location of Frog for Turnout from	
Straight track to straight track	30
Outside of curve to straight track	32
Summary	38
Graphic solutions	40
Inside of curve to straight track	42

CHAPTER III

CROSSOVERS

Frogs Same Number PAGE
Parallel tracks, straight track between frogs..... 52
Reverse curve between frogs..... 58
Frogs Different Number
Parallel tracks, simple curve between frogs..... 53
Simple curve and tangent between frogs..... 55
Reverse curve between frogs..... 60

CHAPTER IV

CONNECTING TRACKS

Location of Frogs for Connecting Tracks between
Diverging straight tracks.....63, 67
Intersecting straight tracks..... 72
The outside of a curve and a straight track..... 73
The inside of a curve and a straight track..... 77
The outside of one and the inside of the other of two curved tracks 84
The outside of both of two intersecting curved tracks..... 86
The inside of both of two intersecting curved tracks..... 89

CHAPTER V

WYES

Location of Frogs for Wyes Composed of
Three simple curves
Wye on outside of principal curve..... 92
Wye on inside of principal curve..... 94
A straight principal track and two curves..... 96
Special Wyes.....99, 103

CHAPTER VI

PARALLEL AND CONCENTRIC SIDINGS

Parallel Sidings..... 104
Concentric Sidings
On the outside of the principal track..... 105
On the inside of the principal track..... 109

CHAPTER VII

CROSSINGS

Crossing between Straight Tracks..... 118
Crossing between a Straight and a Curved Track
Frog angles..... 118
Length of rail between frogs..... 118
Crossings between Curved Tracks
Frog angles..... 121
Length of rail between frogs..... 121

CHAPTER VIII

LADDER TRACKS

PAGE

Minimum Distance between Switch Points 127

Location of Frogs on Ladder when the angle between the ladder and body tracks is

The frog angle 126
Twice the frog angle 129
Three times the frog angle 129
Greater than the frog angle but less than twice the frog angle 137
Greater than twice but less than three times the frog angle 140

To connect a ladder and a drill track, when the angle of the ladder and the body tracks is

Twice the frog angle 131, 133
Three times the frog angle 135
Greater than the frog angle but less than twice the frog angle 137
Greater than twice but less than three times the frog angle 143

CHAPTER IX

VERTICAL CURVES

By Uniform Rate of Change of Grade 148
Recommended rate of change of grade 149
Examples 149

By Offsets to Tangent Grades 153
Examples 154

CHAPTER X

CAPITALIZATION, ANNUAL COST, EQUIVALENT COST

Elements affecting relative economy 156
Capitalization 156
Annual Cost 157
Equivalent Cost 158

CHAPTER XI

MISCELLANEOUS FORMULÆ AND RULES OF THE THUMB

Acres 159

Bridge Weights

Highway bridges 159
Railway bridges 160
Bridge towers 160
Bridge span 160

Concrete

Approximate quantities of materials per cu. yd. 161
More exact quantities of materials per cu. yd. 162
Cement 162

CHAPTER XI — *Continued*

Curves PAGE
Curve resistance 162
Compensation for 162
Approximate determination of degree of 162
Elevation of outer rail on 163
Widening gage on 165
Foundations
Resistance to overturning 165
Resistance to settlement 165
Grade Resistance 166
Equivalent tangent grade 166
Locomotive rating
Tractive effort 166
Gross rating 168
Net rating 168
Engine and grade problems 168
Miles 169
Piles 169
Rail Section 169
Right of Way 170
Right-angle Triangles 170
Train Resistance 170
Tons 170
Track
Lead for split switches 170
Radius of lead curve 171
Degree of lead curve 171
Degree of lead curve on curves 171
Slip switches 171
Crossovers — straight track
Frogs of same number 171
Frogs of different number 171
Concentric curved tracks 171
Waterways 171

TABLES

PAGE

1. Convenient Conversion Multiples 175
2. Conversion of Decimals of an Inch into Inches 176
3. Conversion of Decimals of a Foot into Inches 177
4. Conversion of Linear Feet into Miles 178
5. Conversion of Linear Miles of 100 Ft. Wide Right-of-Way into Acres 179
   Conversion of Linear Feet of 100 Ft. Wide Right-of-Way into Acres 180
6. Reduction of Rise in Feet per Mile to Rate Per Cent of Grade. 181
7. Conversion of Pounds into Tons 182
8. Seconds in Decimals of a Degree 183
9. Minutes in Decimals of a Degree 183
10. Conversions of Minutes and Seconds into Decimals of a Degree. 184
11. Middle Ordinate for Curving Rails 187
12. Elevation of Outer Rail on Curves 188
13. Gage on Curves 188
14. Frogs and Switch Rails 189
15. Theoretical Switch Leads 190
16. Practical Switch Leads 192
17. Switch Leads for Rigid Frogs 193
18. Switch Leads for Spring Frogs 194
19. Coördinates for Locating Parallel Sidings with Tape 195
20. Frog Distance for Crossovers, Frogs of Same Number, Straight Track between Frogs 201
21. Frog Distance for Crossovers, Frogs of Different Number, Simple Curve between Frogs 202
22. Frog Distance for Crossovers, Frogs of Different Number, Simple Curve and Tangent between Frogs 204
23. Frog Distance for Crossovers, Frogs of Same Number, Reverse Curve between Frogs 208
24. Frog Distance for Crossovers, Frogs of Different Number, Reverse Curve between Frogs 212
25. NG and Other Distances 218
26. Location of Frog and other Distances for Turnouts from Straight Track into Diverging Spurs 219
27. Switch Ties — Track Ties 6″ × 8″ × 8′ 00″ 244
28. Switch Ties — Track Ties 7″ × 9″ × 8′ 6″ 245
29. Switch Ties — Track Ties 7″ × 9″ × 9′ 0″ 246
30. Crossover Ties — Track Ties 7″ × 9″ × 8′ 6″ 247
31. Rail Sections 250

PAGE
32. Quantities of Material per Mile and per 100 Feet of Track..... 251
33. Ballast Tables..... 252
34. Drainage Areas..... 264
35. Cast Iron Pipe..... 265
36. Cast Iron Pipe Culverts..... 266
37. Stone Box Culverts..... 267
38. Arch Culverts..... 269
39. Deck Plate Girder..... 270
40. Through Plate Girder Spans, I-Beam Floor..... 271
41. Through Plate Girder Spans, Stringer Floor..... 272
42. Curves of Contents of Abutments..... 273
43. Cost Curves Timber Trestles..... 274
44. Interest, Capitalization, Annual Cost and Equivalent Cost (4%) 277
44A. Interest, Capitalization, Annual Cost and Equivalent Cost (5%) 279
45. Velocity Heads in Feet for Various Velocities in Miles per Hour 281
46. General Geometric Problems..... 282
47. General Trigonometric Formulæ..... 288
48. General Properties of Triangles
Right Triangles..... 291
In General..... 292
49. Simple Curve Formulæ..... 294
50. Compound Curve Formulæ..... 295
51. Reverse Curve Formulæ..... 296
52. Radii..... 298
53. Tangents and Arcs of a One-degree Curve..... 302
53A. Corrections to be added to Tangents..... 338
54. Logarithms of Numbers..... 339
55. Logarithmic Sines, Cosines, Tangents and Cotangents..... 364
56. Auxiliary Tables for Logarithmic Sines and Tangents of Small Angles..... 409
57. Logarithmic Versed Sines and External Secants..... 411
58. Auxiliary Table of Versed Sines and External Secants of Small Angles..... 456
59. Natural Sines and Cosines..... 458
60. Natural Tangents and Cotangents..... 467
61. Natural Versed Sines and External Secants..... 479
62. Lengths of Circular Arcs; Radius = 1..... 502
Acknowledgments..... 503
Explanation of Tables..... 503

INTRODUCTION

Definitions

The modern turnout is a combination of appliances by means of which the transfer or passage of an engine car or train from one track to another is accomplished, and consists of a frog, lead rails, switch rails with the mechanism for operating the latter, and the ties upon which all are supported.

A three-throw switch is a double turnout, either to the same or opposite sides of the principal or main track, requiring three frogs and two sets of switch rails having three positions.

A slip switch may be either single or double and is a combination of a crossing and a connecting track or a crossing and two connecting tracks where the angle of the crossing is equal to the frog angle.

A connecting track is a combination of two turnouts and the track between the heels of the frogs, by means of which is accomplished the transfer or passage of an engine, car or train from one track to another crossing or intersecting track, or from one track to another parallel or concentric track remote from it.

A crossover is a combination of two turnouts by means of which is accomplished the transfer or passage of an engine, car or train from one track to another not remotely distant parallel or concentric track.

A wye is a combination of three turnouts and two connecting tracks, which, with the principal or main track, resemble the letter Y with the top closed, by means of which an engine, car or train may be turned.

Yard Design

After the location for a yard has been selected and after its size and type have been determined from a careful and thorough study of present and possible future traffic and

operation conditions, the actual detailed design by the engineer begins. He then selects and arranges in series various ones of the combinations particularly defined above so as to obtain the desired train movements. The best design of any yard is the one of simplest and most uniform arrangement to accomplish the desired train movements within a given space and in which the maximum permissible degree of curvature is nowhere exceeded. To accomplish this condition all the turnouts, crossovers, etc., must be properly located, which is in fact a statement that the frogs must be properly located. The location of the frog is therefore the key to practical and successful track designing.

TRACK FORMULÆ AND TABLES

CHAPTER I

Frogs and Split Switches

Properties of Frogs. — There are numerous designs of frogs in use, among which are stiff or rigid frogs, spring frogs, double spring frogs, swing rail frogs and movable point frogs. The same principle holds true in all of them. Therefore the rigid frog, which is the simplest form, is shown in Fig. 1.

The ends B and D or either of them are referred to as the "heel." The ends E and G or either of them are referred to as the "toe." $\overline{AB}$ and $\overline{AD}$ are the "point rails" and the

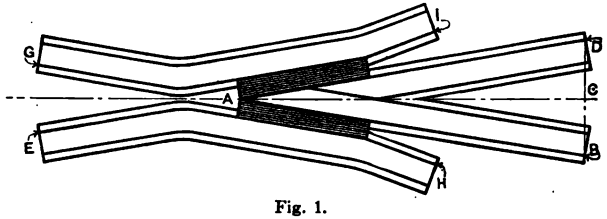

Fig. 1.

intersection of the gage sides of the point rails at A, is the theoretical "frog point," which is referred to hereinafter in all cases unless otherwise particularly designated. $\overline{EH}$ and $\overline{GI}$ are the "wing rails." The distance $\overline{GE}$ between the gage sides of the wing rails at the toe and the distance $\overline{BD}$ between the gage sides of the point rails at the heel are the "spread" at the "toe" and "heel" respectively. Unless otherwise particularly designated, hereinafter when the "spread" is referred to the distance $\overline{BD}$, the spread at the heel, is meant. The angle $\overline{BAD}$ is the frog angle, and hereinafter will be designated by the letter F. The number of a frog is the quotient obtained by dividing the perpendicular distance from the point to a line joining the heels by the spread, or it is the number of units measured along the line

$\overline{AC}$ in which the frog spreads one unit, and hereinafter will be designated by the letter N.

In the discussions that follow, $\overline{AD} = \overline{AB}$, the distance from the point to the heel, measured along the point rails, will be designated by the letter K; and $\overline{AE} = \overline{AG}$, the distance from the point to the toe, or, if any part of the wing rail is curved, the length of the straight portion of it from the point of frog to the point of curve will be designated by the letter W.

Problem 1.

To determine the frog number (N) in terms of the frog angle (F).

In Fig. 1,

$\overline{ABD}$ is an isosceles triangle since $\overline{AB} = \overline{AD}$.

$\overline{AC}$ is $\perp$ to the base $\overline{BD}$. $\therefore \overline{BC} = \overline{CD}$ and $\measuredangle BAC = \measuredangle CAD$.

$F = \measuredangle BAD = \measuredangle BAC + \measuredangle CAD$. $\therefore F = 2 \measuredangle BAC = 2 \measuredangle CAD$.

$$N = \frac{\overline{AC}}{\overline{BD}} = \frac{1}{2} \cdot \frac{\overline{AC}}{\overline{BC}} = \frac{1}{2} \cot \measuredangle BAC = \frac{1}{2} \cot \frac{F}{2}.$$

Problem 2.

To determine the distance, in terms of the frog number (N) and the gage (G), from the point of intersection of the center lines to the foot of a perpendicular from the frog point upon either center line.

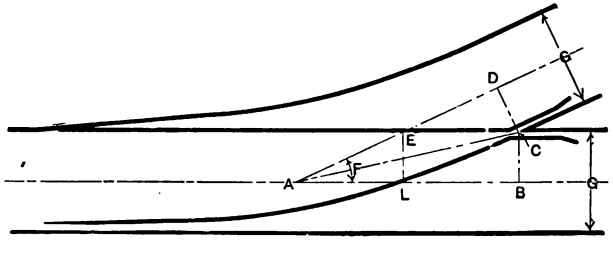

Fig. 2.

In Fig. 2,

Given: G = Gage,
N = Frog number
F = Frog angle.

Required: $\overline{AB}$ and $\overline{AD}$.

Let AB be the center line of one track $\parallel$ to one point rail of the frog. Let AD be the center line of the connecting track $\parallel$ to the other point rail of the frog. Let A be the point of intersection of said center lines. Let C be the frog point. Let $\overline{CB}$ and $\overline{CD}$ be $\perp$s from the frog point upon said center lines. Connect A and C.

$$F = \measuredangle BAD. \qquad \overline{CB} = \overline{CD} = \frac{G}{2}.$$

$$\triangle ABC = \triangle ADC \text{ and } \measuredangle BAC = \measuredangle DAC = \frac{F}{2}.$$

$$\overline{AB} = \overline{AD} = \overline{CB} \cdot \cot \measuredangle BAC = \frac{G}{2} \cdot \cot \frac{F}{2} = \left(\frac{1}{2} \cot \frac{F}{2}\right) \cdot G = NG.$$

Problem 3.

To determine the distance from the frog point to the point of intersection of the gage side of the main track rail and the center line of the connecting track parallel to the point rail.

First: When measured on the gage side of the main track rail. In Fig. 2,

Given: G = Gage,
N = Frog number,
F = Frog angle.

Required: Distance $\overline{EC}$.

Let E = said point of intersection. Draw $\overline{EL} \perp$ to $\overline{AB}$.

$$\triangle AEL = \triangle ECD.$$

$$\overline{EC} = \overline{AE} = \overline{AD} - \overline{ED} = NG - \frac{G}{2} \cot F.$$

Second: When measured on the center line of the connecting track parallel to point rail.

Given: same as above.

Required: Distance $\overline{ED}$.

$$\overline{ED} = \frac{G}{2} \cot F.$$

Simple Turnouts

There are two methods of considering the curve of the switch lead or turnout.

First, to consider the curve of the outer rail of the lead curve as tangent to the toe of the frog and to the main track

rail, and the switch rail as a chord of this curve from the point of tangency with the main track rail to a point on the outer rail of the lead curve, the offset from which to the main track rail will equal the heel distance, or to consider the switch rail simply as a piece of straight rail, of arbitrarily assumed length, which connects the main track rail and the outer curved rail of the lead and is neither tangent to nor a chord of the curve.

Second, to consider the curve of the outer rail of the lead curve as tangent to the toe of the frog and the heel of the switch rail.

Only the second method will be considered, and under it the most ideal condition will obviously be when the tangent distance from the heel of the switch rail to the point of intersection of the switch rail and wing rail produced equals the tangent distance from the said point of intersection to the toe of the frog.

Problem 4.

To determine the length of the lead, that is, the distance from the point of switch to the point of the frog, measured on the main track; the radius and degree of the lead curve; the length of the outer rail of the lead curve, and the length of the straight rail in the lead.

Given: G = Gage,
N = Frog number,
F = Frog angle,
W = Straight length of wing rail,
S = Length of switch rail,
H = Heel distance.

Required: α = Switch angle,
L = Lead,
R = Radius of center line of lead curve,
D = Degree of lead curve,
CE_1ED = Arc of outer rail of lead curve,
Z_1D_1 = Length straight rail in lead.

In Fig. 3,

Let $ATZVB$ and Z_1D_1P represent points on the gage side of the main track rails,

ACE_1EDP and Z_1D_1 represent points on the gage side of the lead rails,

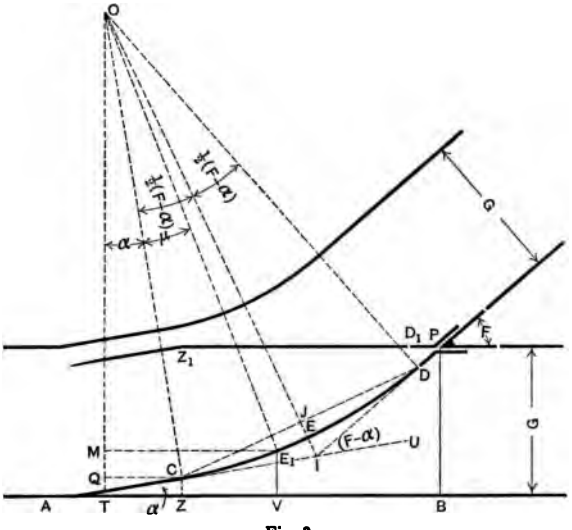

Fig. 3.

G = Gage,

P = Theoretical point of frog,

D = Toe of frog, or if any portion of the wing rail is curved, D = point of curve,

PD = Length of straight portion of wing rail $= W$,

$\measuredangle Z_1PD = \measuredangle Z_1PI$ = frog angle $= F$,

A = Point of switch rail,

C = Heel of switch rail,

$\overline{AC}$ = Length of switch rail $= S$,

Z = Foot of $\perp$ from gage side of switch rail at heel upon gage side of main track rail,

$\overline{CZ}$ = Heel distance $= H$,

$\measuredangle CAZ = \measuredangle IAB$ = switch angle $= \alpha$,

$\overline{CE_1ED}$ = Arc of curved or outer rail of lead, tangent to heel of switch rail at C and to toe of frog at D,

O = Center of lead curve,

R = Radius of lead curve,

$\overline{OC} = \overline{OE_1} = \overline{OE} = \overline{OD}$ = radii of outer rail of lead curve $= \left(R + \frac{G}{2}\right)$,

D = Degree of lead curve,

$\overline{CD}$ = Long chord of lead curve.

Extend $\overline{PD}$ and $\overline{AC}$ to intersect at I; then $\overline{DI} = \overline{CI} =$ tangent distances of lead curve.

$\measuredangle DIU =$ Angle of intersection $= (F - \alpha) = \measuredangle DOC$ = center angle.

$\measuredangle DCI = \measuredangle DCU = \measuredangle DOI = \measuredangle IOC = \frac{1}{2}(F - \alpha)$.

$B =$ Foot of $\perp$ from point of frog upon gage side of opposite main track rail.

$\overline{AB} =$ Lead $= L$.

$$\sin \measuredangle \overline{CAZ} = \frac{\overline{CZ}}{\overline{AC}} = \sin \alpha = \frac{H}{S}.$$

$$\therefore \alpha = \sin^{-1} \frac{H}{S}. \tag{1}$$

$$(\overline{AC} \cdot \sin \measuredangle \overline{CAZ}) + [\overline{CD} \cdot \sin (\measuredangle DCI + \measuredangle CAZ)] + (\overline{DP} \cdot \sin \measuredangle A_1PD) = G.$$

$$S \cdot \sin \alpha + \overline{CD} \cdot \sin [\tfrac{1}{2}(F - \alpha) + \alpha] + W \cdot \sin F = G.$$

$$S \cdot \sin \alpha + \overline{CD} \cdot \sin \tfrac{1}{2}(F + \alpha) + W \cdot \sin F = G.$$

$$\overline{CD} = \frac{G - (W \cdot \sin F + S \cdot \sin \alpha)}{\sin \frac{1}{2}(F + \alpha)}. \tag{2}$$

$$\overline{AB} = (\overline{AC} \cdot \cos \measuredangle CAZ) + [\overline{CD} \cdot \cos (\measuredangle DCI + \measuredangle CAZ)] + (\overline{DP} \cdot \cos \measuredangle A_1PD).$$

$$L = S \cdot \cos \alpha + \overline{CD} \cdot \cos \tfrac{1}{2}(F + \alpha) + W \cdot \cos F. \tag{3}$$

Substitute in (3) the value for $\overline{CD}$ given in (2).

$$L = S \cdot \cos \alpha + \frac{[G - (W \cdot \sin F + S \sin \alpha)] \cos \frac{1}{2}(F + \alpha)}{\sin \frac{1}{2}(F + \alpha)} + W \cdot \cos F.$$

Reduce to a common denominator and factor.

$$L = \frac{S [\sin \frac{1}{2}(F + \alpha) \cos \alpha - \cos \frac{1}{2}(F + \alpha) \sin \alpha]}{\sin \frac{1}{2}(F + \alpha)} - \frac{W \cdot [\sin F \cdot \cos \frac{1}{2}(F + \alpha) - \cos F \cdot \sin \frac{1}{2}(F + \alpha)]}{\sin \frac{1}{2}(F + \alpha)} + G \cdot \cot \tfrac{1}{2}(F + \alpha).$$

Simplifying,

$$L = \frac{S \cdot \sin [\frac{1}{2}(F + \alpha) - \alpha] - W \cdot \sin [F - \frac{1}{2}(F + \alpha)]}{\sin \frac{1}{2}(F + \alpha)} + G \cdot \cot \tfrac{1}{2}(F + \alpha).$$

$$L = (S - W) \frac{\sin \frac{1}{2}(F - \alpha)}{\sin \frac{1}{2}(F + \alpha)} + G \cdot \cot \tfrac{1}{2}(F + \alpha). \tag{4}$$

By construction $\overline{OE}$ is a radius of the outer rail of the lead curve at E, the center of the arc $\overline{CE_1ED}$. $\therefore$ $\overline{OE}$ is $\perp$ to the chord $\overline{CD}$ and bisects it at J and

$$\measuredangle DOJ = \measuredangle JOC = \tfrac{1}{2}(F - \alpha).$$

$$\overline{OD} = \frac{\overline{JD}}{\sin \measuredangle DOJ} = \frac{\overline{CD}}{2 \cdot \sin \frac{1}{2}(F - \alpha)}. \tag{5}$$

Substitute for $\overline{CD}$ in (5) the value given in (2).

$$\left(R + \frac{G}{2}\right) = \frac{G - (W \cdot \sin F + S \sin \alpha)}{2 \cdot \sin \frac{1}{2}(F - \alpha) \cdot \sin \frac{1}{2}(F + \alpha)}.$$

$$R = \frac{G - (W \cdot \sin F + H)}{2 \sin \frac{1}{2}(F - \alpha) \cdot \sin \frac{1}{2}(F + \alpha)} - \frac{G}{2}, \tag{6}$$

or the value for R may be expressed as follows:

$$R = \frac{G - (W \sin F + H)}{\cos \alpha - \cos F} - \frac{G}{2}. \tag{7}$$

$$D = 2 \cdot \sin^{-1} \frac{50}{R}. \tag{8}$$

Length of outer or curved rail of lead,

$$\overline{CE_1ED} : 2 \cdot \pi \cdot \left(R + \frac{G}{2}\right) :: (F - \alpha) : 360.$$

$$\overline{CE_1ED} = \frac{2 \cdot \pi \cdot \left(R + \frac{G}{2}\right) \cdot (F - \alpha)}{360}$$

$$= 0.017453 \cdot \left(R + \frac{G}{2}\right) \cdot (F - \alpha). \tag{9}$$

The angle $(F - \alpha)$ in (9) is expressed in degrees and decimals of a degree.

Length of straight rail in lead between the points Z_1 and D_1,

$$\overline{Z_1D_1} = L - (W + S). \tag{10}$$

Summary

$$\alpha = \sin^{-1} \frac{H}{S}. \tag{1}$$

$$L = (S - W) \frac{\sin \frac{1}{2}(F - \alpha)}{\sin \frac{1}{2}(F + \alpha)} + G \cdot \cot \tfrac{1}{2}(F + \alpha). \tag{4}$$

$$R = \frac{G - H - W \cdot \sin F}{2 \cdot \sin \frac{1}{2}(F - \alpha) \cdot \sin \frac{1}{2}(F + \alpha)} - \frac{G}{2}. \tag{6}$$

$$R = \frac{G - H - W \cdot \sin F}{\cos \alpha - \cos F} - \frac{G}{2}. \tag{7}$$

$$D = 2 \cdot \sin^{-1} \frac{50}{R} \cdot \tag{8}$$

$$\overline{CE_1ED} = 0.017453 \cdot \left(R + \frac{G}{2}\right) \cdot (F - \alpha) \tag{9}$$

$(F - \alpha)$ being in degrees and decimals.

$$Z_1D_1 = L - (W + S). \tag{10}$$

In the actual condition met with in practice the switch rail is generally $0\frac{1}{4}''$ thick at the point and beveled to about $0\frac{1}{8}''$ to reduce the blow of the wheels on the point. In practice the actual point of the frog is blunt and about $0\frac{1}{2}''$ thick.

In the above formulæ, in order to meet the first of these conditions, before solving (1), H should be reduced by $0\frac{1}{4}''$.

Before solving (4), G should be reduced by $0\frac{1}{4}''$. Elsewhere, where H and G occur their full values must be used.

To meet the second condition named, after solving (4) as outlined above, L should be increased by an amount equal to $0\frac{1}{2}'' \cdot N = 0.0417' \times N$.

Problem 5.

To determine the perpendicular offset from the gage side of the main track rail to any point on the gage side of the lead curve, and the distance from the point of the switch rail to the foot of such offset.

Given: R = Radius of center line of lead curve,
G = Gage,
S = Length of switch rail,
H = Heel distance,
α = Switch angle,
μ = Center angle of lead curve from heel of switch rail to given point.

Required: y = offset,
x = distance from point of switch rail to foot of offset.

In Fig. 3,

Let E_1 be any point on the gage side of the outer rail of the lead. Draw the radius $\overline{OE}$. Drop a $\perp$ from the center O upon the gage side of the main track rail at T. From O draw the radius $\overline{OC} \perp$ to the switch rail at its heel. $\measuredangle \overline{COT} = \alpha$. From E_1 let fall a $\perp$ upon the gage side of the main track rail at V and upon $\overline{OT}$ at M. Let fall a $\perp$ from C

upon the gage side of the main track rail at Z and upon $\overline{OT}$ at Q. Let $\measuredangle E_1OC = \mu$ and A = point of switch rail.

$$y = \overline{E_1V} = \overline{MT} = \overline{OQ} - \overline{OM} + \overline{QT} = \overline{OQ} - \overline{OM} + \overline{CZ}$$
$$= (\overline{OC} \cdot \cos\measuredangle COT) - [\overline{OE_1} \cdot \cos(\measuredangle E_1OC + \measuredangle COT)]$$
$$+ (\overline{AC} \cdot \sin\measuredangle \overline{CAZ})$$
$$= \left(R + \frac{G}{2}\right) \cdot \cos\alpha - \left(R + \frac{G}{2}\right) \cdot \cos(\mu + \alpha) + S \cdot \sin\alpha,$$
$$y = \left[H + \left(R + \frac{G}{2}\right) \cdot \cos\alpha\right] - \left(R + \frac{G}{2}\right) \cdot \cos(\mu + \alpha), \quad (11)$$
$$x = \overline{AT} + \overline{TV} = (\overline{AZ} - \overline{TZ}) + \overline{TV} = (\overline{AZ} - \overline{QC}) + \overline{ME_1}$$
$$= [(\overline{AC} \cdot \cos\measuredangle CAZ) - (\overline{OC} \cdot \sin\measuredangle COT)]$$
$$+ [\overline{OE_1} \cdot \sin(\measuredangle E_1OC + \measuredangle COT)],$$
$$x = \left[S \cdot \cos\alpha - \left(R + \frac{G}{2}\right) \cdot \sin\alpha\right] + \left(R + \frac{G}{2}\right) \cdot \sin(\mu + \alpha),$$

which may be written without appreciable error,

$$x = \left[S - \left(R + \frac{G}{2}\right) \cdot \sin\alpha\right] + \left(R + \frac{G}{2}\right) \cdot \sin(\mu + \alpha). \quad (12)$$

It is very convenient in practice to know the coördinates of the center and quarter points of the lead curve. For any particular frog, switch rail and switch angle the quantities within the brackets in equations (11) and (12) are constant. For this reason, where the coördinates of a number of points are desired, these formulæ are very convenient of solution, the quantities $\left(R + \frac{G}{2}\right) \cdot \cos(\mu + \alpha)$ and $\left(R + \frac{G}{2}\right) \cdot \sin(\mu + \alpha)$ being the only variable quantities.

Where the coördinates of a single point on the lead curve are desired, the values of y and x may be expressed as follows:

$$y = H + \left[2 \cdot \left(R + \frac{G}{2}\right) \cdot \sin\left(\frac{\mu}{2} + \alpha\right) \cdot \sin\frac{\mu}{2}\right], \quad (13)$$

$$x = S + \left[2 \cdot \left(R + \frac{G}{2}\right) \cdot \cos\left(\frac{\mu}{2} + \alpha\right) \cdot \sin\frac{\mu}{2}\right], \quad (14)$$

which may be convenient when working with logarithms. Having corrected α in the solution of equation (1), Prob. 4, for the actual thickness of the point of the switch rail, no correction is necessary in equations (11), (12), (13) and (14) to make them fit actual conditions.

Lengthening and Shortening Switch Leads

Switch leads computed as demonstrated in Prob. 4 are termed in practice "theoretical switch leads." To put in a switch with one of such leads necessitates the cutting of rails and the loss of the difference between the cost price and the price as "scrap" of the short pieces of rail left over plus the labor of cutting and drilling the rails and handling the scrap.

Some railroads prefer to sacrifice the lead curve slightly and to permit the points of the switch rails to be not opposite each other, in order to avoid such loss. Hence "practical switch leads" slightly longer or shorter than the "theoretical switch leads" are adopted. The lengths of the "practical switch leads" are selected so that the straight rail between the heel of the switch point and the toe of the frog is composed of one or more pieces of rail of commercial length or of such a fraction thereof that both pieces of the rail may be used. The curved rail may be made of the same number and length of pieces as the straight rail. In justification of the "practical switch leads" are claimed the saving outlined before; the fact that the degree of the curve is only very slightly increased; the fact that a portion of the error in making the straight and curved rail the same may be overcome by laying the straight rail with tight joints and the curved rail with open joints; the fact that only one of the two switch rails is in service at one time; the fact that it throws the bending of the stock rail a little farther ahead of the point of the switch rail on the opposite side of the track, giving a slightly wider gage at point of switch rail when switch is set for siding; and the fact that the head and second rods do not form with the switch rails a figure of stability and will probably keep their adjustment as well with one point of switch rail slightly in advance of the other as when the points of switch rails are directly opposite. It is also claimed that no disadvantage is experienced where a "practical lead" is connected up to an interlocking plant.

Problem 6, Case 1.

To determine the correction to the radius of the lead curve and the length of the tangent adjacent to the heel of the switch rail when the practical lead is longer than the theoretical lead.

Given: L = Theoretical lead,
S = Length of switch rail,
α = Switch angle,
F = Frog angle,
W = Distance point to toe of frog,
R = Radius of center line of theoretical lead curve,
G = Gage of track,
L_1 = Practical lead.

Required: C correction to radius.
C_2C_1 = Tangent adjacent to heel of switch rail.

In Fig. 4, let $\overline{EJ}$ and $\overline{E_1J_1}$ represent the gage side of the main track rails,

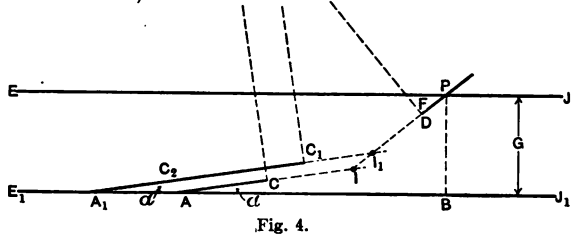

Fig. 4.

P = Point of frog,
D = Toe of frog,
$\overline{PD}$ = Distance point to toe of frog = W,
$\measuredangle EPI$ = Frog angle = F,
A = Point of switch rail for theoretical lead,
$\overline{AC}$ = $\overline{A_1C_2}$ = Length of switch rail = S,
$\measuredangle CAB$ = $\measuredangle C_2A_1B$ = Switch angle = α,
A_1 = Point of switch rail for practical lead,
B = Foot of $\perp$ from point of frog P upon $\overline{E_1J_1}$,
$\overline{PB}$ = Gage = G,
I = Point of intersection of $\overline{PD}$ and $\overline{AC}$ extended,
$\overline{CI}$ = $\overline{DI}$ = Tangent distances theoretical lead curve = T (outer rail),
I_1 = Point of intersection of $\overline{DI}$ and the extension of $\overline{A_1C_2}$,
$\overline{C_1I_1}$ = $\overline{DI_1}$ = Tangent distance practical lead curve = T_1 (outer rail),
$\overline{AB}$ = Theoretical lead = L,
$\overline{A_1B}$ = Practical lead = L_1,
$\measuredangle C_2I_1I$ = Central angle of lead curves = $(F - \alpha)$.

$$\overline{AA_1} \cdot \sin \measuredangle C_2A_1B = II_1 \cdot \sin \measuredangle C_2I_1I.$$

$$\therefore I_1I = \frac{\overline{AA_1} \cdot \sin \measuredangle C_2A_1B}{\sin \measuredangle C_2I_1I} = \frac{(L_1 - L)\sin\alpha}{\sin(F-\alpha)} = \overline{DI} - \overline{DI_1}$$

$$= \text{correction to tangent distance.}$$

$$\therefore C = \frac{(L_1 - L)\sin\alpha}{\sin(F-\alpha)} \cot \tfrac{1}{2}(F-\alpha). \qquad (1)$$

$$\overline{A_1I_1} = \overline{A_1A} \cdot \cos \measuredangle C_2A_1B + \overline{AI} + \overline{II_1} \cdot \cos \measuredangle C_2I_1I$$

$$= (L_1 - L)\cos\alpha + S + T + \frac{(L_1 - L)\sin\alpha}{\sin(F-\alpha)} \cos(F-\alpha)$$

$$= (L_1 - L)\frac{\cos\alpha \sin(F-\alpha) + \sin\alpha\cos(F-\alpha)}{\sin(F-\alpha)}$$

$$+ S + T = (L_1 - L)\frac{\sin F}{\sin(F-\alpha)} + S + T$$

$$C_2C_1 = \overline{A_1I_1} - \overline{A_1C_2} - \overline{C_1I_1}$$

$$= (L_1 - L)\frac{\sin F}{\sin(F-\alpha)} + S + T - S - T + \frac{(L_1 - L)\sin\alpha}{\sin(F-\alpha)}$$

$$= (L_1 - L)\frac{\sin F + \sin\alpha}{\sin(F-\alpha)}$$

$$= (L_1 - L)\frac{\sin\frac{1}{2}(F+\alpha)}{\sin\frac{1}{2}(F-\alpha)}. \qquad (2)$$

Problem 6, Case 2.

To determine the correction to the radius of the lead curve and the length of the tangent adjacent to the toe of the frog when the practical lead is shorter than the theoretical lead.

Given the same quantities as in Case 1.

Required: C = Correction to radius,
$\overline{DD_1}$ = Tangent adjacent to toe of frog.

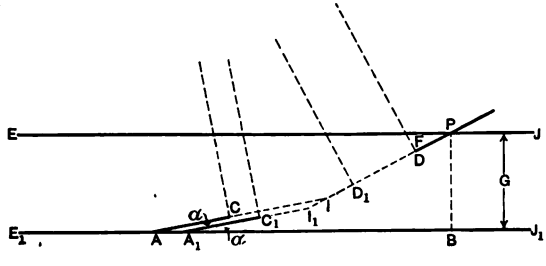

Fig. 5.

$$\overline{AA_1} \sin \measuredangle CAB = \overline{I_1I} \sin \measuredangle CII_1.$$

$$\overline{I_1I} = \frac{\overline{AA_1} \sin \measuredangle CAB}{\sin \measuredangle CII_1} = \frac{(L - L_1) \sin \alpha}{\sin (F - \alpha)}.$$

$$\overline{A_1I_1} = \overline{AI} - \overline{AA_1} \cos \measuredangle CAB - \overline{II_1} \cos \measuredangle CII_1.$$

$$\overline{A_1C_1} + \overline{C_1I_1} = \overline{AC} + \overline{CI} - \overline{AA_1} \cos \measuredangle CAB - \overline{II_1} \cos \measuredangle CII_1.$$

$$S + T_1 = S + T - (L - L_1) \cos \alpha - \frac{(L - L_1) \sin \alpha}{\sin (F - \alpha)} \cos (F - \alpha).$$

$$\therefore \quad T - T_1 = (L - L_1) \frac{\sin F}{\sin (F - \alpha)} = \text{correction to tangent.}$$

$$\therefore \quad C = (L - L_1) \frac{\sin F}{\sin (F - \alpha)} \cot \tfrac{1}{2} (F - \alpha). \tag{1}$$

$$\begin{aligned}
\overline{DD_1} &= \overline{DI} + \overline{II_1} - \overline{D_1I_1} \\
&= T + \frac{(L - L_1) \sin \alpha}{\sin (F - \alpha)} - T_1 \\
&= T + \frac{(L - L_1) \sin \alpha}{\sin (F - \alpha)} - T + \frac{(L - L_1) \sin F}{\sin (F - \alpha)}.
\end{aligned}$$

$$\begin{aligned}
\overline{DD_1} &= (L - L_1) \frac{\sin F + \sin \alpha}{\sin (F - \alpha)} \\
&= (L - L_1) \frac{\sin \frac{1}{2} (F + \alpha)}{\sin \frac{1}{2} (F - \alpha)}.
\end{aligned} \tag{2}$$

Having corrected the radius, the remaining functions of the curve may be readily figured.

In Problem 6, Case 1, or where the practical lead is longer than the theoretical lead, when figuring the coördinates to points on the lead curve given by the formulæ of Problem 5, it must be remembered that correction must be made for the tangent adjacent to the heel of the switch rail. Applying the correction, formulæ (11) and (12), Problem 5, become

$$\begin{aligned}
y = &\left[(H + \overline{C_1C_2} \cdot \sin \alpha) + \left(R_1 + \frac{G}{2}\right) \cdot \cos \alpha \right] \\
&- \left(R_1 + \frac{G}{2}\right) \cdot \cos (\mu + \alpha).
\end{aligned}$$

$$\begin{aligned}
x = &\left[(S + \overline{C_1C_2}) \cdot \cos \alpha - \left(R_1 + \frac{G}{2}\right) \cdot \sin \alpha \right] \\
&+ \left(R_1 + \frac{G}{2}\right) \cdot \sin (\mu + \alpha),
\end{aligned}$$

which may be written without appreciable error

$$x = \left[(S + \overline{C_1C_2}) - \left(R_1 + \frac{G}{2}\right) \cdot \sin \alpha\right] + \left(R_1 + \frac{G}{2}\right) \cdot \sin (\mu + \alpha).$$

In Problem 6, Case 2, or where the practical lead is shorter than the theoretical lead, to figure the coördinates of points on the lead curve the formulæ of Problem 5 are correct without correction.

Switch Leads on Curves

On curves the switch leads should be of the same length as figured for straight track and as given by Problem 4, formula (4). For all practical purposes the effect of the curve is: — First, when the turnout is on the inside of a curved track, the degree of the lead curve equals degree of lead curve on straight track plus the degree of curve of the curved track. Second, when the turnout is on the outside of a curved track, the degree of the lead curve equals the degree of lead curve on straight track less the degree of curve of the curved track.

Switch Stands

In locating switch stands, care should be exercised to place the stand on the side of the track from which it may be best seen by the engineman when approaching it in the direction facing the points of the switch rails. Where the stand may be seen equally well on either side of the track it should be placed so as to be on the engineman's right side when approaching it in the direction facing the points of the switch rails.

On double track a turnout so located that the points of the switch rails face the normal direction of traffic, is called a "facing point switch" and should be avoided when possible.

Similarly when the turnout is so located that the normal direction of traffic is from the frog to the switch rails, it is called a "trailing switch."

On single track all switches are both facing point and trailing switches.

Problem 7.

To determine approximate formulæ for the tangent to the lead curve, the length of the lead and the radius of the lead curve.

Given: F = Frog angle,
N = Frog number,
W = Distance point to toe of frog,
S = Length of switch rail,
H = Heel distance,
G = Gage of track.

Required: T = Tangent to lead curve,
L = Length of lead,
R = Radius of center line of lead curve.

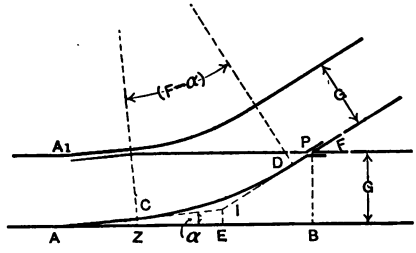

Fig. 6.

In Fig. 6, let A_1P and AB be the rails of the principal track, P = the point of frog, A = the point of switch rail, B = perpendicular from P upon AB, $AB = L$, $AC = S$, $CI = ID = T$, $DP = W$, $\measuredangle A_1PI = F$, $\measuredangle IAB = \alpha$, $CZ = H$, $IE = x$ = length of perpendicular from I upon AB, G = Gage. Let N' be the number of the switch rail

$$= \frac{S \text{ (measured in feet)}}{H \text{ (measured in inches)}} \times 12;$$

then
$$\left.\begin{aligned} S + T &= xN' \\ W + T &= (G - x)\,N \end{aligned}\right\} \text{approximately,}$$

$$\frac{S+T}{N'} = x,$$

$$\frac{W+T}{N} - G = -x,$$

from which

$$\frac{S+T}{N'} + \frac{W+T}{N} - G = 0.$$

Solving for T:

$$T = \frac{N'(NG - W) - SN}{N + N'} \tag{1}$$

$$L = (S + W) + 2\left[\frac{N'(NG - W) - SN}{N + N'}\right] \quad \text{use } G = 4.7 \qquad (2)$$

$$R = T \cot \tfrac{1}{2}(F - \alpha) = T \times \frac{4\,NN' + 1}{2\,(N' - N)}$$

$$= \frac{N'(NG - W) - SN}{N + N'} \times \frac{4\,NN' + 1}{2\,(N' - N)}. \qquad (3)$$

Problem 8.

To locate the points of frogs for a combination turnout and crossover (slip switch).

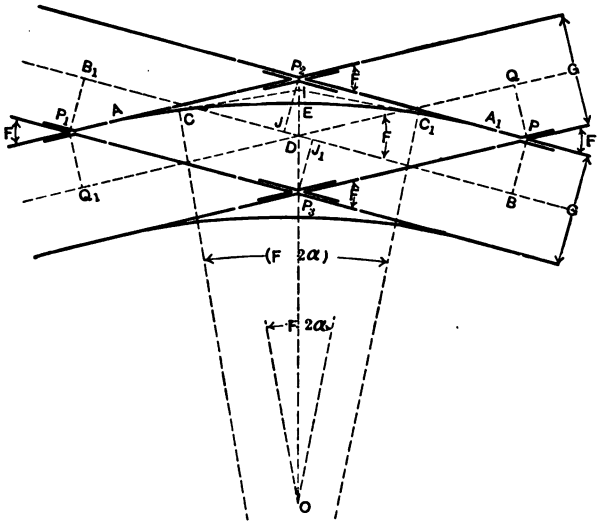

Fig. 7.

Given: N = The number of the frogs P, P_1, P_2 and P_3,
F = The angle of the frogs P, P_1, P_2 and P_3,
W = Distance point to toe of single-pointed frogs P and P_1,
G = Gage of tracks.

Required: $BB_1 = QQ_1$,
$PP_2 = P_1P_3$.

In Fig. 7, BB_1 and QQ_1 are the center lines of the tracks and intersect at D. PB, P_1B_1 and PQ and P_1Q_1 are perpendiculars from the points of frogs P and P_1 upon BB_1 and QQ_1. Angle QDB = angle $Q_1DB_1 = F$. $PB = PQ = P_1B_1 = P_1Q_1 = \frac{G}{2}$. It follows then by Problem 2 that $DB = DQ = DB_1 = DQ_1 = NG$.

$$\therefore \quad BB_1 = QQ_1 = 2\,NG. \tag{1}$$

P_2J and P_3J_1 are perpendiculars from the points of the double-pointed frogs P_2 and P_3 upon the center line BB_1. Angle P_2AC = Angle $P_2A_1C_1 = \alpha$. $CO = CO_1 =$ Radii of outer rail of lead curve $= \left(R + \frac{G}{2}\right)$. Angle $COC_1 = (F - 2\alpha)$. P_2O bisects angles APA_1 and COC_1.

$\measuredangle AP_2O = \left(90 - \frac{F}{2}\right)$ and $\measuredangle AP_2J = (90 - F)$. $\therefore \measuredangle JP_2D = \frac{F}{2}$.

$$JD = J_1D = P_2J \cdot \tan \measuredangle JP_2D = \frac{G}{2} \cdot \tan \frac{F}{2} = \frac{G}{2} \times \frac{1}{\cot \frac{F}{2}} = \frac{G}{4\,N} \tag{2}$$

$$PP_2 = P_1P_3 = JD + DB = J_1D + DB_1 = NG + \frac{G}{4\,N}. \tag{3}$$

Problem 9.

To determine the radius and degree of the lead curve and the mid ordinate of the outer rail of a combination turnout and crossover (slip switch).

In Fig. 7, Given: N, F, W, G, $AC = A_1C_1 = S$, α = switch angle, or H = heel distance, and also the clearance "V" between the toe of the frogs P and P_1 and the point of the switch rails A and A_1 so that $PA_1 = P_1A = (W + V)$.

$$AI = A_1I = (S + T).$$

$$AP_2 = P_1P_2 - P_1A = \left(NG + \frac{G}{4\,N}\right) - (W + V).$$

$$AI : AP_2 :: \sin \measuredangle AP_2I : \sin \measuredangle P_2IA.$$

$$\frac{(S + T)}{\left(NG + \frac{G}{4\,N}\right) - (W + V)} = \frac{\sin\left(90 - \frac{F}{2}\right)}{\sin\left[90 + \left(\frac{F - 2\alpha}{2}\right)\right]}.$$

$$T = \left(NG + \frac{G}{4N} - W - V\right) \frac{\cos\frac{F}{2}}{\cos\frac{F-2\alpha}{2}} - S. \qquad (1)$$

$$\left(R + \frac{G}{2}\right) = T \cdot \cot\frac{F-2\alpha}{2}$$

$$= \left(NG + \frac{G}{4N} - W - V\right) \cdot \frac{\cos\frac{F}{2}}{\sin\frac{F-2\alpha}{2}} - S \cdot \cot\frac{F-2\alpha}{2}.$$

$$R = \left(NG + \frac{G}{4N} - W - V\right) \frac{\cos\frac{F}{2}}{\sin\frac{F-2\alpha}{2}} - S\cot\frac{F-2\alpha}{2} - \frac{G}{2}. \qquad (2)$$

Mid ordinate outer rail of lead curve

$$= \left(R + \frac{G}{2}\right)\left(1 - \cos\frac{F-2\alpha}{2}\right)$$

$$= \left(R + \frac{G}{2}\right)\operatorname{vers}\frac{F-2\alpha}{2}. \qquad (3)$$

$$\text{Arc } CEC_1 = 0.017453 \cdot \left(R + \frac{G}{2}\right) \cdot \frac{F-2\alpha}{2}. \qquad (4)$$

Three-throw and Tandem Switches

A three-throw switch is a double turnout with two pairs of switch rails having three positions, and requires three frogs.

If the turnouts are to the opposite sides of the main or principal track there will be one frog in each rail of the main track and a third frog, called the crotch frog, in the outer rails of the lead curves at their point of intersection between the rails of the main or principal track.

If the turnouts are to the same side of the main track there will be two frogs in one rail of the main track and an exterior frog outside of the main track at the point of intersection of the outer rail of one turnout and the inner rail of the other turnout.

In each case of a three-throw switch to the same side of the main track there are two methods of solution: (*a*) To make both frogs in the main track rail standard frogs and the exterior frog a special frog. (*b*) To make one frog in the

main track rail and the exterior frog standard frogs and the remaining main track frog a special frog.

If the turnouts are so located that the switch rails of one clears the switch rails of the other, but comes between them and their frog, the arrangement might more appropriately be termed a tandem switch.

Three-throw or tandem switches should never be used where it is possible to avoid doing so. By a little patience in design and careful study of the situation, and possibly by the use of a few frogs of greater angle and sharper curvature, such switches may almost always be avoided. However, very congested conditions or very valuable waylands that otherwise could not be fully utilized, may, at times, justify the use of three-throw or tandem switches.

If a number of three-throw or tandem switches, of the same combination, are used in one locality, the special frogs should be made with the wing and point rails curved to correspond to the curves in which they are located; then the lengths of the leads, the degree of either lead curve, and the degree of the curves beyond the heel of the main track frog will not be altered, and it is necessary to figure only the angle of the special frog and its location.

If a single three-throw or tandem switch turning out to the opposite sides of the main track, is used in a track over which there are no important train movements, it is usually customary to figure the angle between the tangents to the curves, in which the crotch frog is located, at their point of intersection, then to select a standard frog of angle most nearly corresponding for use as the crotch frog. Interposing the straight crotch frog in the lead curves increases the degree of curve and makes of the lead of each turnout two curves of different degree, one on either side of the crotch frog.

In careful switch work, having selected the crotch frog, it is then necessary to figure the degree of the lead curves and the length of the lead, that is, the distance parallel to the main track from the points of the switch rails to the point of the crotch frog and the distance from the point of the crotch frog to the points of the frogs in the main track, together with the perpendicular distance from the gage side of either main track rail to the point of the crotch frog.

Problem 10.

To determine the angle between the tangents to the lead curves at their point of intersection for the selection of a crotch frog for a three-throw or tandem switch turning out to the opposite sides of the principal or main track.

Case 1. Where the location of the frogs in the main track is fixed and where F, F_1, W, W_1, R, R_1, S, S_1, and α and α_1 are different and the points of the frogs in the principal or main track are not opposite.

This case presupposes that the frogs in the principal or main track rails have been located by the previous problems to give the desired conditions beyond the heels of these frogs and are therefore fixed.

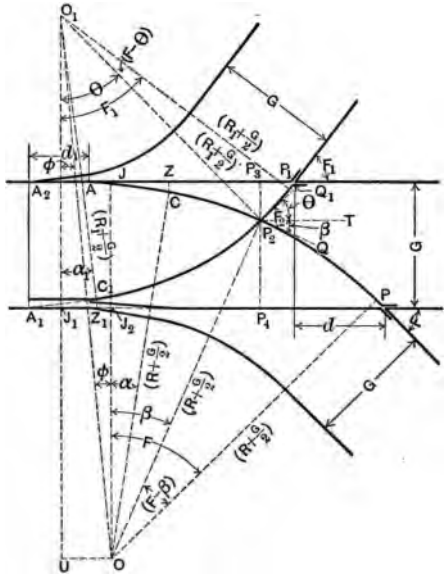

Fig. 8.

In Fig. 8,

Given: N = Number of one of the frogs in the main track rails,

F = Frog angle,

W = Distance point to toe of frog,

K = Distance point to heel of frog,
S = Length of switch rail,
α = Switch angle,
R = Radius of lead curve,
N_1 = Number of the other frog in the main track rail,
F_1 = Frog angle,
W_1 = Distance point to toe of frog,
K_1 = Distance point to heel of frog,
S_1 = Length of switch rail,
α_1 = Switch angle,
R_1 = Radius of lead curve,
d = Distance $\parallel$ to main track between points of main track frogs,
G = Gage of tracks.

Required: $F_2 = \measuredangle QP_2Q_1$ = Angle of crotch frog.

Let O and O_1 be the centers of the lead curves. Drop a $\perp$ from O_1 upon the gage side of the main track rail at J_1. Extend O_1J_1 to U. Draw $OU \parallel$ to center line of main track. Drop a $\perp$ from O upon the gage side of the main track rail at J and intersecting the other main track rail at J_2. Draw OO_1.

Let P and P_1 be the points of the frogs in the main track rails.

Let P_2 be the point of the crotch frog, i.e., the point of intersection of the gage side of the outer rails of the lead curves. Let A and A_1 be the points, and C and C_1 the heels of the switch rails S and S_1. Let the central angle of the curve between the toe of frog F and P_2 equal $(F - \beta)$ and that of the curve between the toe of frog F_1 and P_2 equal $(F_1 - \theta)$. Draw $P_2T \parallel$ to the center line of the main track; then $\measuredangle Q_1P_2T = \theta$ and $\measuredangle TP_2Q = \beta$. Draw the radii $= \left(R_1 + \frac{G}{2}\right)$ from O_1 to the toe of frog F_1, to P_2 and to C_1. Draw the radii $= \left(R + \frac{G}{2}\right)$ from O to the toe of frog F, to P_2 and to C. Draw Q_1P_2 and QP_2 tangent to the lead curves at P_2; then $\measuredangle QP_2Q_1 = F_2$.

$\measuredangle P_1O_1J_1 = F_1$, $\measuredangle P_1O_1P_2 = (F_1 - \theta)$, $\measuredangle P_2O_1J_1 = Q_1P_2T = \theta$.
$\measuredangle C_1O_1J_1 = \alpha_1$, $\measuredangle OO_1U = \measuredangle JOO_1 = \phi$, $\measuredangle POP_2 = (F - \beta)$.
$\measuredangle P_2OJ = \beta$, $\measuredangle COJ = \alpha$, $\measuredangle POJ = F$.

$$\overline{AC} = S,\ \overline{A_1C_1} = S_1,\ S \cdot \sin\alpha = H = \text{heel distance}$$

and
$$S_1 \cdot \sin\alpha_1 = H_1.$$

$$\overline{O_1U} = \overline{O_1J_1} + \overline{JO} - G = \left[\left(R_1 + \frac{G}{2}\right)\cos\alpha_1 + S_1 \cdot \sin\alpha_1\right]$$
$$+ \left[\left(R + \frac{G}{2}\right) \cdot \cos\alpha + S \cdot \sin\alpha\right] - G$$
$$= \left(R_1 + \frac{G}{2}\right) \cdot \cos\alpha_1 + \left(R + \frac{G}{2}\right) \cdot \cos\alpha + H_1 + H - G.$$

$$\overline{OU} = \overline{PJ_1} - \overline{PJ_2} = \left[d + W_1 \cdot \cos F_1 + \left(R_1 + \frac{G}{2}\right)\sin F_1\right]$$
$$- \left[W \cdot \cos F + \left(R + \frac{G}{2}\right)\sin F\right].$$

$$\tan\phi = \tan \measuredangle OO_1U = \frac{OU}{O_1U} =$$
$$\frac{\left[d + W_1 \cdot \cos F_1 + \left(R_1 + \frac{G}{2}\right) \cdot \sin F_1\right] - \left[W \cdot \cos F + \left(R + \frac{G}{2}\right) \cdot \sin F\right]}{\left(R_1 + \frac{G}{2}\right) \cdot \cos\alpha_1 + \left(R + \frac{G}{2}\right) \cdot \cos\alpha + H_1 + H - G} \qquad (1)$$

$$\overline{OO_1} = \frac{\overline{OU}}{\sin \measuredangle OO_1U} =$$
$$\frac{\left[d + W_1 \cdot \cos F_1 + \left(R_1 + \frac{G}{2}\right) \cdot \sin F_1\right] - \left[W \cdot \cos F + \left(R + \frac{G}{2}\right) \cdot \sin F\right]}{\sin\phi} \qquad (2)$$

Let $s = \frac{1}{2}$ perimeter of triangle $P_2O_1OP_2$.

$$\tan\tfrac{1}{2}(\theta - \phi) = \tan\tfrac{1}{2} \measuredangle P_2O_1O$$
$$= \sqrt{\frac{\left[s - \left(R_1 + \frac{G}{2}\right)\right](s - \overline{OO_1})}{s\left[s - \left(R + \frac{G}{2}\right)\right]}}. \qquad (3)$$

$$\tan\tfrac{1}{2}(\theta + \phi) = \tan\tfrac{1}{2} \measuredangle P_2OO_1$$
$$= \sqrt{\frac{\left[s - \left(R + \frac{G}{2}\right)\right](s - \overline{OO_1})}{s\left[s - \left(R_1 + \frac{G}{2}\right)\right]}}. \qquad (4)$$

$$F_2 = (\beta + \theta). \qquad (5)$$

Problem 10, Case 2.

Where the location of the frogs in the main track rails is fixed and where F, F_1, W, W_1, R, R_1, S, S_1, and α and α_1 are different and the points of the frogs in the principal or main track are directly opposite, i.e., $d = 0$.

$$\tan\phi = \frac{\left[W_1\cdot\cos F_1+\left(R_1+\frac{G}{2}\right)\cdot\sin F_1\right]-\left[W\cdot\cos F+\left(R+\frac{G}{2}\right)\cdot\sin F\right]}{\left(R_1+\frac{G}{2}\right)\cdot\cos\alpha_1+\left(R+\frac{G}{2}\right)\cdot\cos\alpha+H_1+H-G} \qquad (1)$$

$$\overline{OO_1} = \frac{\left[W_1\cdot\cos F_1+\left(R_1+\frac{G}{2}\right)\cdot\sin F_1\right]-\left[W\cdot\cos F+\left(R+\frac{G}{2}\right)\cdot\sin F\right]}{\sin\phi} \qquad (2)$$

Let $s = \frac{1}{2}$ perimeter of triangle $P_2O_1OP_2$.

$$\tan\tfrac{1}{2}(\theta-\phi) = \sqrt{\frac{\left[s-\left(R_1+\frac{G}{2}\right)\right]\cdot(s-\overline{OO_1})}{s\left[s-\left(R+\frac{G}{2}\right)\right]}}. \qquad (3)$$

$$\tan\tfrac{1}{2}(\beta+\phi) = \sqrt{\frac{\left[s-\left(R+\frac{G}{2}\right)\right]\cdot(s-\overline{OO_1})}{s\left[s-\left(R_1+\frac{G}{2}\right)\right]}}. \qquad (4)$$

$$F_2 = (\beta+\theta). \qquad (5)$$

Problem 10, Case 3.

Where the location of the frogs in the main track rails is fixed and where $F = F_1$, $W = W_1$, $R = R_1$, $S = S_1$ and $\alpha = \alpha_1$, and the points of the frogs in the rails of the principal or main track are not opposite.

$$\overline{O_1U} = 2\left[\left(R+\frac{G}{2}\right)\cos\alpha+H\right]-G.$$

$$OU = d.$$

$$\tan\phi = \frac{d}{2\left[\left(R+\frac{G}{2}\right)\cdot\cos\alpha+H\right]-G}. \qquad (1)$$

$$\overline{OO_1} = \frac{d}{\sin\phi}. \qquad (2)$$

Triangle $P_2O_1OP_2$ is an isosceles triangle.

$$\cos(\theta - \phi) = \cos(\beta + \phi) = \frac{\overline{OO_1}}{2\left[R + \frac{G}{2}\right]}. \tag{3}$$

$$F_2 = (\beta + \theta). \tag{4}$$

Problem 10, Case 4.

Where the location of the frogs in the main track rails is fixed and where $F = F_1$, $W = W_1$, $R = R_1$, $S = S_1$ and $\alpha = \alpha_1$, *and the points of the frogs in the rails of the principal or main track are directly opposite.*

$$\overline{O_1U} = 2 \cdot \left[\left(R + \frac{G}{2}\right) \cdot \cos\alpha + H\right] - G.$$

$\overline{OU} = 0$. $\therefore \measuredangle\phi = 0$ and point O coincides with U, $\overline{O_1U} = \overline{OO_1}$ and $\overline{OO_1}$ is $\perp$ to the center line of the main track and triangle $P_2O_1OP_2$ is an isosceles triangle. $\therefore \theta = \beta = \frac{F_2}{2}$ and

$$\cos\frac{F_2}{2} = \frac{\left[\left(R + \frac{G}{2}\right) \cdot \cos\alpha + H\right] - \frac{G}{2}}{R + \frac{G}{2}} = \left(\cos\alpha + \frac{2H - G}{2R + G}\right), \tag{1}$$

which might also be written

$$\cos\frac{F_2}{2} = \cos F + \frac{G - 2 \cdot W \cdot \sin F}{2R + G}.$$

Problem 11.

To determine the angle between the tangents to the lead curves at their point of intersection, for the selection of a crotch frog for a three-throw or tandem switch turning out to the opposite sides of the principal or main track.

This problem presupposes that the frogs in the rails of the principal or main track are known, but that their exact location is not important because of conditions beyond the heels of the frogs and that a certain arrangement of the switch rails is controlling. Therefore the points of the switch rails are fixed.

Case 1. *When the location of the points of the switch rails is fixed and when* F, F_1, W, W_1, R, R_1, S, S_1, *and* α *and* α_1 *are different and the points of the switch rails are not opposite.*

In Fig. 8, let d_1 = distance ∥ to center line of main track between the points of the switch rails.

$$\overline{O_1U} = \left[\left(R_1 + \frac{G}{2}\right)\cdot\cos\alpha_1 + H_1\right] + \left[\left(R + \frac{G}{2}\right)\cdot\cos\alpha + H\right] - G.$$

$$\overline{OU} = (\overline{A_2A} + \overline{AZ} - JZ) - (\overline{A_1Z_1} - J_1Z) = \left[d_1 + S\cdot\cos\alpha - \left(R + \frac{G}{2}\right)\cdot\sin\alpha\right] - \left[S_1\cdot\cos\alpha_1 - \left(R_1 + \frac{G}{2}\right)\cdot\sin\alpha_1\right],$$

which may be written without appreciable error

$$\overline{OU} = \left[d_1 + (S - S_1) - \left(R + \frac{G}{2}\right)\cdot\sin\alpha + \left(R_1 + \frac{G}{2}\right)\cdot\sin\alpha_1\right].$$

Tan ϕ = tan $\measuredangle\, OO_1U$ =

$$\frac{\overline{OU}}{\overline{O_1U}} = \frac{d_1 + (S - S_1) - \left(R + \frac{G}{2}\right)\cdot\sin\alpha + \left(R_1 + \frac{G}{2}\right)\cdot\sin\alpha_1}{\left(R_1 + \frac{G}{2}\right)\cdot\cos\alpha_1 + \left(R + \frac{G}{2}\right)\cdot\cos\alpha + H_1 + H - G}. \quad (1)$$

$$\overline{OO_1} = \frac{\overline{OU}}{\sin\measuredangle\, OO_1U}$$

$$= \frac{d_1 + (S - S_1) - \left(R + \frac{G}{2}\right)\cdot\sin\alpha + \left(R_1 + \frac{G}{2}\right)\cdot\sin\alpha_1}{\sin\phi}. \quad (2)$$

Let $s = \frac{1}{2}$ perimeter of triangle $P_2O_1OP_2$.

$\tan\frac{1}{2}(\theta - \phi) = \tan\frac{1}{2}\measuredangle\, P_2O_1O$

$$= \sqrt{\frac{\left[s - \left(R_1 + \frac{G}{2}\right)\right]\cdot(s - \overline{OO_1})}{s\cdot\left[s - \left(R + \frac{G}{2}\right)\right]}}. \quad (3)$$

$\tan\frac{1}{2}(\beta + \phi) = \tan\frac{1}{2}\measuredangle\, P_2OO_1$

$$= \sqrt{\frac{\left[s - \left(R + \frac{G}{2}\right)\right]\cdot(s - \overline{OO_1})}{s\cdot\left[s - \left(R_1 + \frac{G}{2}\right)\right]}}. \quad (4)$$

$$F_2 = (\beta + \theta). \quad (5)$$

Problem 11, Case 2.

When the points of the switch rails are fixed and when F, F_1, W, W_1, R, R_1, S, S_1, and α and α_1 are different and the points of the switch rails are directly opposite.

$$\tan\phi = \frac{(S - S_1) - \left(R + \frac{G}{2}\right)\cdot\sin\alpha + \left(R_1 + \frac{G}{2}\right)\cdot\sin\alpha_1}{\left(R_1 + \frac{G}{2}\right)\cdot\cos\alpha_1 + \left(R + \frac{G}{2}\right)\cdot\cos\alpha + H_1 + H - G} \quad (1)$$

$$\overline{OO_1} = \frac{(S - S_1) - \left(R + \frac{G}{2}\right)\cdot\sin\alpha + \left(R_1 + \frac{G}{2}\right)\cdot\sin\alpha_1}{\sin\phi}. \quad (2)$$

$$\tan\tfrac{1}{2}(\theta - \phi) = \sqrt{\frac{\left[s - \left(R_1 + \frac{G}{2}\right)\right]\cdot(s - \overline{OO_1})}{s\cdot\left[s - \left(R + \frac{G}{2}\right)\right]}}. \quad (3)$$

$$\tan\tfrac{1}{2}(\beta + \phi) = \sqrt{\frac{\left[s - \left(R + \frac{G}{2}\right)\right]\cdot(s - \overline{OO_1})}{s\cdot\left[s - \left(R_1 + \frac{G}{2}\right)\right]}}. \quad (4)$$

$$F_2 = (\beta + \theta). \quad (5)$$

Problem 11, Case 3.

When the points of the switch rails are fixed and when $F = F_1$, $W_1 = W_1$, $R = R_1$, $S = S_1$ and $\alpha = \alpha_1$ and the points of the switch rails are not opposite.

$$\overline{O_1U} = 2\left[\left(R + \frac{G}{2}\right)\cdot\cos\alpha + H\right] - G.$$

$$\overline{OU} = d_1.$$

$$\tan\phi = \frac{d_1}{2\cdot\left[\left(R + \frac{G}{2}\right)\cdot\cos\alpha + H\right] - G}. \quad (1)$$

$$\overline{OO_1} = \frac{d_1}{\sin\phi}. \quad (2)$$

$$\cos(\theta - \phi) = \cos(\beta + \phi) = \frac{\overline{OO_1}}{2\left(R + \frac{G}{2}\right)}. \quad (3)$$

$$F_2 = (\beta + \theta). \quad (4)$$

Problem 11, Case 4.

When the points of the switch rails are fixed and when $F = F_1$, $W = W_1$, $R = R_1$, $S = S_1$ and $\alpha = \alpha_1$ and the points of the switch rails are directly opposite.

$$\cos\frac{F_2}{2} = \left(\cos\alpha + \frac{2H - G}{2R + G}\right), \tag{1}$$

or,

$$\cos\frac{F_2}{2} = \cos F + \frac{G - 2 \cdot W \cdot \sin F}{2R + G}.$$

Problem 12.

To determine the perpendicular offset from the gage side of either rail of the principal or main track to the point of intersection of the gage side of the outer rails of the lead curves, i.e., to the point of the crotch frog.

Having determined β and θ, Fig. 8, then substituting $(\beta - \alpha)$ and $(\theta - \alpha_1)$ and $\left(R + \frac{G}{2}\right)$ and $\left(R_1 + \frac{G}{2}\right)$ for μ and $\left(R + \frac{G}{2}\right)$ respectively in equation (11), Problem 5, we have,

$$y = \overline{P_3P_2} = \left[H + \left(R + \frac{G}{2}\right) \cdot \cos\alpha\right] - \left(R + \frac{G}{2}\right) \cdot \cos\beta \tag{1}$$

$$y_1 = \overline{P_4P_2} = (G - y) = \left[H_1 + \left(R_1 + \frac{G}{2}\right) \cdot \cos\alpha_1\right] - \left(R_1 + \frac{G}{2}\right) \cdot \cos\theta. \tag{3}$$

If the crotch frog is made special with wing and point rails curved then the distance from the point of either switch rail, parallel to the center line of the principal or main track, to the point of intersection of the gage side of the outer rails of the lead curves, i.e., to the point of the crotch frog, is from equation (12), Problem 5,

$$x = \overline{AP_3} = \left[S - \left(R + \frac{G}{2}\right) \cdot \sin\alpha\right] + \left(R + \frac{G}{2}\right) \cdot \sin\beta. \tag{2}$$

$$x_1 = \overline{A_1P_4} = \left[S_1 - \left(R_1 + \frac{G}{2}\right) \cdot \sin\alpha_1\right] + \left(R_1 + \frac{G}{2}\right) \cdot \sin\theta. \tag{4}$$

Problem 13.

To determine the length of the leads, the radii and degree of the lead curves of a three-throw or tandem switch turning out to the opposite sides of the principal or main track.

First: When a special crotch frog with curved point and wing rails, as determined by Problem 10 or 11, isused, the length of the leads, the radii and degree of the lead curves

are the same as for the simple turnouts for frogs F and F_1, Fig. 8, and given in Problem 4. The location of the crotch frog is given by the equations (1) and (2) or (3) and (4), Problem 12.

Second: When a standard frog with straight point and wing rails and angle nearly but not equal to F_2 of Problem 9 is used for a crotch frog and when the location of the points of the frogs in the principal or main track is fixed,

(a) Determine $\measuredangle F_2$ by the proper case of Problem 10.

(b) Determine $\measuredangle \beta$ and $\measuredangle \theta$ by the proper case of Problem 10.

(c) Determine y and y_1 by equation (1) or (3) Problem 12.

(d) Select for the crotch frog a standard frog of angle most nearly corresponding to $\measuredangle F_2$; call the angle F_2'.

(e) Divide the angle of the crotch into two angles, which call β' and θ', so that $\beta' = \frac{\beta}{F_2} \times F_2'$ and $\theta' = F_2' - \beta'$, where the angles are expressed in degrees and decimals.

Then referring to Fig. 8 and Problem 4,

$$\overline{P_4P} = (K_2' - W) \cdot \frac{\sin \frac{1}{2}(F - \beta')}{\sin \frac{1}{2}(F + \beta')} + (G - y) \cdot \cot \tfrac{1}{2}(F + \beta'). \quad (1)$$

$$\overline{P_3P_1} = \overline{PP_4} - d. \quad (2)$$

$$\overline{AP_3} = (S - W_2') \cdot \frac{\sin \frac{1}{2}(\beta' - \alpha)}{\sin \frac{1}{2}(\beta' + \alpha)} + y \cdot \cot \tfrac{1}{2}(\beta' + \alpha). \quad (3)$$

$$\overline{A_1P_4} = (S_1 - W_2') \cdot \frac{\sin \frac{1}{2}(\theta' - \alpha_1)}{\sin \frac{1}{2}(\theta' + \alpha_1)} + (G - y) \cdot \cot \tfrac{1}{2}(\theta' + \alpha_1). \quad (4)$$

$$L_F = \overline{AP_3} + \overline{P_4P}. \quad (5)$$

$$L_{F_1} = \overline{A_1P_4} + \overline{P_3P_1} = \overline{A_1P_4} + (\overline{P_4P} - d). \quad (6)$$

R = Radius of curve between c and crotch frog

$$= \frac{y - H - W_2' \cdot \sin \beta'}{2 \cdot \sin \frac{1}{2}(\beta' - \alpha) \cdot \sin \frac{1}{2}(\beta' + \alpha)} - \frac{y}{2}. \quad (7)$$

R' = Radius of curve between crotch frog and frog F

$$= \frac{(G - y) - K_2' \cdot \sin \beta - W \cdot \sin F}{2 \cdot \sin \frac{1}{2}(F - \beta') \cdot \sin \frac{1}{2}(F + \beta')} - \frac{G - y}{2}. \quad (8)$$

R_1 = Radius of curve between c_1 and crotch frog

$$= \frac{(G - y) - H_1 - W_2' \cdot \sin \theta'}{2 \cdot \sin \frac{1}{2}(\theta' - \alpha_1) \sin \frac{1}{2}(\theta' + \alpha_1)} - \frac{G - y}{2}. \quad (9)$$

R_1' = Radius of curve between crotch frog and frog F_1

$$= \left[\frac{y\cos\theta' - (\overline{P_4P} - d)\sin\theta'}{\sin(F_1 - \theta')} - W_1\right]\cot\tfrac{1}{2}(F_1 - \theta'). \qquad (10)$$

Degree of curve $= 2 \cdot \sin^{-1}\dfrac{50}{R}$.

Third: When a standard frog with straight point and wing rails and angle nearly but not equal to F_2 of Problem 11 is used for the crotch frog and when the location of the points of the switch rails is fixed.

Proceed as in case 2, (a) to (e) inclusive. Then

$$\overline{AP_3} = (S - W_2') \cdot \frac{\sin\frac{1}{2}(\beta' - \alpha)}{\sin\frac{1}{2}(\beta' + \alpha)} + y \cdot \cot\tfrac{1}{2}(\beta' + \alpha). \qquad (1)$$

$$\overline{A_1P_4} = (\overline{AP_3} + d_1). \qquad (2)$$

$$\overline{P_4P} = (K_2' - W) \cdot \frac{\sin\frac{1}{2}(F - \beta')}{\sin\frac{1}{2}(F + \beta')} + (G - y) \cdot \cot\tfrac{1}{2}(F + \beta'). \qquad (3)$$

$$\overline{P_3P_1} = (K_2' - W_1) \cdot \frac{\sin\frac{1}{2}(F_1 - \theta')}{\sin\frac{1}{2}(F_1 + \theta')} + y \cdot \cot\tfrac{1}{2}(F_1 + \theta'). \qquad (4)$$

$$L_F = \overline{AP_3} + \overline{P_4P}. \qquad (5)$$

$$L_{F_1} = \overline{A_1P_4} + \overline{P_3P_1} = (\overline{AP_3} + d) + \overline{P_3P_1}. \qquad (6)$$

$$R = \frac{y - H - W_2' \cdot \sin\beta'}{2 \cdot \sin\frac{1}{2}(\beta' - \alpha) \cdot \sin\frac{1}{2}(\beta' + \alpha)} - \frac{y}{2}. \qquad (7)$$

$$R' = \frac{(G - y) - K_2' \cdot \sin\beta - W\sin F}{2 \cdot \sin\frac{1}{2}(F - \beta') \cdot \sin\frac{1}{2}(F + \beta')} - \frac{G - y}{2}. \qquad (8)$$

$$R_1 = \left[\frac{(G - y) \cdot \cos\alpha_1 - (AP_3 + d_1) \cdot \sin\alpha_1}{\sin(\theta' - \alpha_1)} - W_2'\right] \cdot \cot\tfrac{1}{2}(\theta' - \alpha_1) \qquad (9)$$

$$R_1' = \frac{y - K_2' \cdot \sin\theta' - W_1 \cdot \sin F_1}{2 \cdot \sin\frac{1}{2}(F_1 - \theta')\sin\frac{1}{2}(F_1 + \theta')} - \frac{y}{2}. \qquad (10)$$

Degree of curve $= 2 \cdot \sin^{-1}\dfrac{50}{R}$.

CHAPTER II

Turnouts into Diverging Tracks

Problem 14.

To locate the frog point for a spur track diverging at any angle from a straight main track, using a given simple curve tangent to the given spur and to the heel of the frog, when all measurements are referred to the center lines of both tracks.

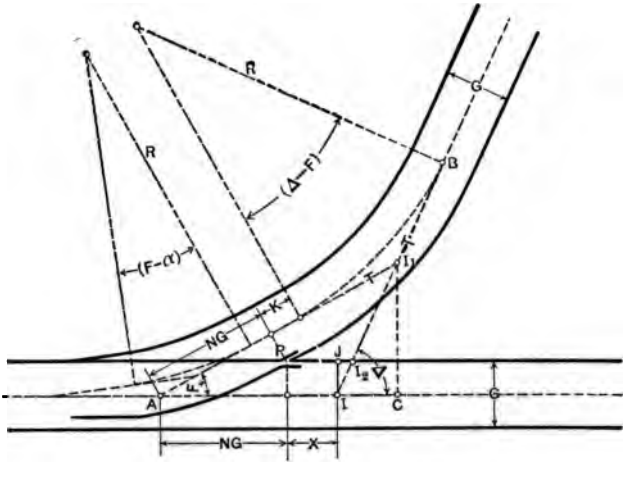

Fig. 9.

Given: N = Frog number,
F = Frog angle,
G = Gage of track,
K = Distance point to heel of frog.
R or D = the radius or degree of given curve.

Required:

x = Distance from the point of intersection of the center line of the given spur produced with the center line of the principal track to the point of frog, measured on the center line of the principal track.

Δ = Angle of intersection of the center line of given spur produced with the center line of the principal track. To be measured in the field.

$T = R \cdot \tan \frac{1}{2}(\Delta - F)$ = Tangent distance for $(\Delta - F)°$ of the given curve. To be computed or taken from tables.

Let AC be the center line of the main track and let BI be the extension of the center line of the spur track intersecting AC at I. Measure angle $BIC = \Delta$. Let angle $I_1AC = F$. In triangle I_1AI

$$\overline{AI} : \overline{AI_1} :: \sin \measuredangle AI_1I : \sin \measuredangle AII_1,$$

$$(NG + x) : (NG + K + T) :: \sin(\Delta - F) : \sin \Delta.$$

$$\therefore \quad x = \frac{(NG + K + T)\sin(\Delta - F)}{\sin \Delta} - NG. \tag{1}$$

When x is negative $(-)$ the distance is measured from I away from the point of switch. When $x = 0$, then I = point of frog, and when x is positive $(+)$ the distance is measured from I towards the point of switch.

The distance x may also be obtained in the following manner. Drop a $\perp$ from I_1 on the center line of the main track at C; then

$$\overline{I_1C} = \overline{AI_1} \sin \measuredangle I_1AC.$$

$$\overline{IC} = \overline{I_1C} \cot \measuredangle I_1IC = \overline{AI_1} \sin \measuredangle I_1AC \cdot \cot \measuredangle I_1IC$$

$$= (NG + K + T) \sin F \cot \Delta.$$

$$\overline{AC} = \overline{AI_1} \cos \measuredangle I_1AC.$$

$$NG + x + IC = (NG + K + T) \cos F.$$

$$\therefore \quad x = [(NG + K + T)(\cos F - \sin F \cot \Delta)] - NG. \tag{2}$$

The work in the field is sometimes facilitated by knowing the distance $\overline{II_1}$, which may be found as follows:

$$\overline{II_1} : \overline{AI_1} :: \sin \measuredangle I_1AI : \sin \measuredangle AII_1,$$

$$\overline{II_1} = \frac{\overline{AI_1} \sin \measuredangle I_1AI}{\sin AII_1} = \frac{(NG + K + T)\sin F}{\sin \Delta}. \tag{3}$$

Unless all the work is new, in practice the main track will be constructed, in which case it is frequently convenient and time-saving to refer the problem to the center line of the diverging track and the gage side of the main track rail in which the frog is located. To do this in Fig. 9 let I_2 be the point of intersection of the extension of the center line of the diverging track and the gage side of the said main track rail. Drop a perpendicular from I on the gage side of the main track rail at J. Let P be the frog point. Angle $II_2J = \Delta$. Then

$$\overline{I_2J} = \overline{IJ} \cot \measuredangle II_2J = \frac{G}{2} \cot \Delta, \tag{4}$$

which is added to x as given in (1) or (2) and is positive (+) for values of $\Delta < 90°$ and negative (−) for values of $\Delta > 90°$ for all values of Δ from $\Delta = F$ to $\Delta = (180° - F)$.

$$\overline{II_2} = \frac{\overline{IJ}}{\sin \measuredangle II_2J} = \frac{G}{2 \sin \Delta}. \tag{5}$$

$$\overline{I_2I_1} = \overline{II_1} - \overline{II_2} = \frac{2\,(NG + K + T) \sin F - G}{2 \sin \Delta}. \tag{6}$$

At times physical conditions may limit the distance x or $\overline{BI}$ and it is desired to know the degree or radius of curve that may be used to connect the given frog and spur track. Let the value of x be fixed measure x and Δ and solve (1) for T.

$$T = \frac{(x + NG) \sin \Delta}{\sin (\Delta - F)} - (NG + K). \tag{7}$$

$$R = T \cot \tfrac{1}{2} (\Delta - F).$$

Let $\overline{BI}$ be fixed, measure $\overline{BI}$ and Δ and solve (3) for T.

$$T = \frac{\overline{BI} \sin \Delta - (NG + K) \sin F}{\sin \Delta + \sin F}. \tag{8}$$

Solve for T, substitute value of T in equation (1) or (2) and solve for x.

Problem 15.

To locate the frog point of a spur track diverging at any angle from the outside of a curved main track, using simple curve tangent to heel of frog.

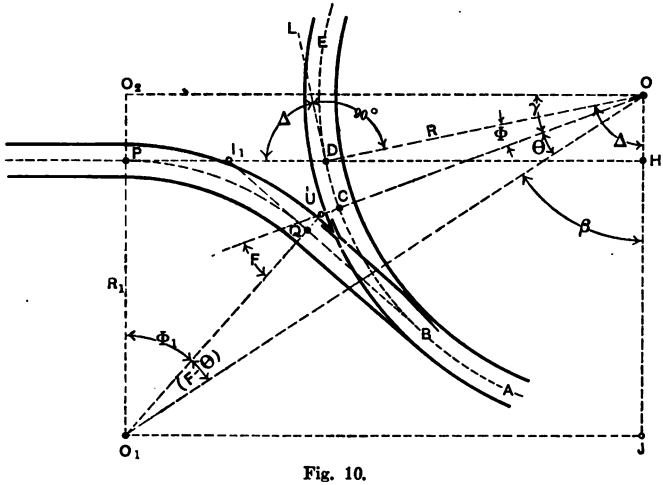

Fig. 10.

Given:

R = Radius of center line main track curve,
R_1 = Radius of center line of connecting curve tangent to heel of frog and diverging track,
N = Frog number,
K = Distance from point to heel of frog,
c = Spread of frog at heel,
F = Frog angle,
G = Gage of tracks.

Measure

Δ = Angle of intersection between PH and DL, the tangent to the center line of the main track curve at the point of intersection D.

NOTE. — When $\Delta > 90°$ the proper algebraic sign must be given to the functions of Δ.

Required:

ϕ = Center angle of main track curve between D and C, the point opposite the heel of the frog.
$x = \overline{DC}$ = chord of main track curve between D and C plus K.
ϕ_1 = Center angle of connecting curve,

$\overline{DP}$ = Distance from point of intersection D to point of tangency of connecting curve.

$\overline{DI_1}$ = Distance from D to the point of intersection of the tangents to the connecting curve.

Let O be the center of the main track curve. Draw $\overline{OD} = R$ and $\overline{OC} \perp$ to point rail of frog at heel. Draw $\overline{OHJ} \perp$ to $\overline{PH}$ at H.

Let O_1 be the center of the connecting curve. Join OO_1. Draw $\overline{O_1P} \perp$ to $\overline{PH}$ at P and equal to R_1. Draw $O_1Q \perp$ to other point rail of frog at heel and draw $O_1J \parallel$ to $\overline{PH}$. Extend $\overline{OC}$ and O_1Q to intersect at U. As stated before, DL is tangent to center line of main track curve at D, the point of intersection of the center lines of the main and diverging tracks.

$$\overline{CU} = \overline{QU} = \frac{1}{2}G + \frac{\frac{c}{2}}{\cos \frac{1}{2} F},$$

which without appreciable error may be written $\frac{1}{2}(G + c)$.

$$\overline{OU} = R + \tfrac{1}{2}(G + c),$$
$$\overline{O_1U} = R_1 + \tfrac{1}{2}(G + c),$$
$$\measuredangle UOO_1 = \theta \text{ and } \measuredangle UO_1O = (F - \theta),$$
$$\frac{\overline{OU} + \overline{O_1U}}{\overline{OU} - \overline{O_1U}} = \frac{\tan \frac{1}{2} F}{\tan \frac{1}{2}(F - 2\theta)},$$

$$\tan \frac{1}{2}(F - 2\theta) = \frac{(\overline{OU} - \overline{O_1U}) \tan \frac{1}{2} F}{\overline{OU} + \overline{O_1U}} = \frac{(R - R_1) \tan \frac{1}{2} F}{R + R_1 + G + c}. \quad (1)$$

Solve for θ.

$$\overline{OH} = \overline{OD} \cdot \cos \measuredangle DOH = R \cdot \cos \Delta,$$
$$\overline{OJ} = \overline{OH} + \overline{HJ} = \overline{OH} + \overline{PO_1} = R \cdot \cos \Delta + R_1.$$

Solve for $\overline{OJ}$.

$$\overline{OO_1} : \overline{O_1U} :: \sin \measuredangle OUO_1 : \sin \measuredangle UOO_1,$$

$$\overline{OO_1} = \frac{\left(R_1 + \frac{G + c}{2}\right) \sin (180 - F)}{\sin \theta} = \frac{\left(R_1 + \frac{G + c}{2}\right) \sin F}{\sin \theta}$$

Solve for $\overline{OO_1}$.

$$\cos \beta = \cos \measuredangle O_1OJ = \frac{\overline{OJ}}{\overline{OO_1}} = \frac{(R \cdot \cos \Delta + R_1) \sin \theta}{\left(R_1 + \frac{G + c}{2}\right) \sin F}. \quad (2)$$

Solve for β.

$$\phi = \Delta - (\beta + \theta). \tag{3}$$

$$x = \overline{DC} + K = \left(2 \cdot R \cdot \sin\frac{\phi}{2}\right) + K \tag{4}$$

$$= \text{approximately } \frac{\phi \times 100}{D} + K, \text{ where } \phi \text{ and } D \text{ are in degrees and decimals.}$$

$$\phi_1 = \beta - (F - \theta). \tag{5}$$

$$\overline{PH} = \overline{O_1J} = \overline{OO_1} \cdot \sin \measuredangle O_1OJ = \overline{OO_1} \cdot \sin\beta. \tag{6}$$

$$\overline{PD} = \overline{PH} - \overline{DH} = \overline{PH} - \overline{OD} \cdot \sin \measuredangle DOH = \overline{PH} - R \cdot \sin\Delta. \tag{7}$$

$$T_1 = \overline{PI_1} = \overline{I_1Q} = R_1 \cdot \tan\frac{\phi_1}{2}. \tag{8}$$

$$\overline{DI_1} = \overline{DP} - T_1.$$

Problem 15, Case 2.

Where $\overline{DC}$ is fixed; to find maximum R_1.

Measure $\overline{DC}$, and since R is known,

$$\phi = 2 \cdot \sin^{-1}\frac{\overline{DC}}{2R}, \text{ and since } \Delta = \phi_1 + F + \phi,$$

$\therefore \quad \phi_1 = \Delta - (F + \phi)$. Now from Fig. 10,

$$\left(R + \frac{G+c}{2}\right)\sin[(90-\Delta)+\phi] - R \cdot \cos\Delta = R_1 - \left(R_1 + \frac{G+c}{2}\right) \cdot \cos\phi_1.$$

$$\therefore \quad R_1 = \frac{\left(R + \frac{G+c}{2}\right)\cos(\Delta - \phi) - R \cdot \cos\Delta + \frac{G+c}{2}\cos\phi_1}{1 - \cos\phi_1}$$

$$= \frac{R \cdot [\cos(\Delta - \phi) - \cos\Delta] + \frac{G+c}{2} \cdot [\cos(\Delta - \phi) + \cos\phi_1]}{\text{vers } \phi_1}. \tag{9}$$

$$\overline{DP} = \left(R + \frac{G+c}{2}\right) \cdot \cos[(90-\Delta)+\phi] + \left(R_1 + \frac{G+c}{2}\right) \cdot \sin\phi_1 - R \cdot \sin\Delta$$

$$= \left(R + \frac{G+c}{2}\right) \cdot \sin(\Delta - \phi) + \left(R_1 + \frac{G+c}{2}\right) \cdot \sin\phi_1 - R \cdot \sin\Delta. \tag{10}$$

$$DI_1 = \overline{DP} - \overline{I_1P} = \overline{DP} - R_1 \cdot \tan\frac{\phi_1}{2}. \tag{11}$$

In the field it would not be necessary to solve (9), (10) and (11) unless for a check.

In work from a curved main track already constructed it is necessary to make some approximation owing to the frog being straight. The frog may be placed with the frog point actually on a point of the main track curve and the main track wing and point rails tangent to the curve at that point. Or it may be placed so that the heel and toe of the main track point and wing rails are on actual points of the main track curve. When so located the frog is a chord of the main track curve.

With $\overline{CD}$ fixed, and considering the frog a chord of the main track curve, set up over C opposite the heel of the frog. Turn $\parallel$ to the frog. Measure from C, in the direction from the heel to the toe of the frog, the distance $(NG + K)$ and set a temporary point. Set up over this point. Sight on C, turn the frog angle toward the side of the turnout. Measure $(NG + K)$ and set a stake. This gives the point Q. Project the line to obtain the point of intersection I_1. Measure $\overline{QI_1}$ = tangent distance of connecting curve. Set up over I_1. Measure $\measuredangle \phi_1 = \measuredangle QI_1D$ = Center angle of curve.

$$R_1 = \overline{QI_1} \cdot \cot \tfrac{1}{2} \measuredangle QI_1D = T_1 \cdot \cot \frac{\phi_1}{2}.$$

While at I, measure $\overline{I_1P} = \overline{QI_1}$ and set stake for P. T. of connecting curve. Set the center point on the connecting curve by the external.

Problem 15, Case 3. *If the distance $\overline{PD}$ is for any reason fixed, to find the distance $\overline{DC}$ and the maximum radius R_1 for connecting curve so that P may be the point of tangency for the connecting curve.*

From O drop a $\perp$ on O_1P produced. Let the point where this $\perp$ meets O_1P produced be O_2. Let the $\measuredangle O_2OU = \gamma = (90 - \Delta + \phi)$. To determine the value of γ we have

$$\overline{OU} \cdot \cos \gamma = \text{projection of } \overline{OU} \text{ on } \overline{OO_2},$$

$$\overline{OU} \cdot \sin \gamma = \text{projection of } \overline{OU} \text{ on } \overline{O_1O_2},$$

$$(\overline{OD} \cdot \sin \Delta + \overline{PD}) - \overline{OU} \cdot \cos \gamma = (\overline{OC} \cdot \sin \Delta + \overline{PD})$$

$$- \overline{OU} \cdot \cos \gamma = \text{projection of } \overline{O_1U} \text{ on } \overline{OO_2},$$

$$\overline{O_1O_2} = \overline{O_1P} + \overline{PO_2} = (\overline{O_1U} + \overline{OH} - \overline{QU}) = (\overline{O_1U} + \overline{OH} - \overline{CU}),$$

$$\overline{O_1U} + (\overline{OH} - \overline{CU}) - \overline{OU} \cdot \sin \gamma = \text{projection of } \overline{O_1U} \text{ on } \overline{O_1O_2}.$$

$\overline{O_1U}$ makes with $\overrightarrow{OO_2}$ the angle $(F+\gamma)$.

$$\therefore \quad (\overline{OC}\cdot\sin\Delta+\overline{PD})-\overline{OU}\cdot\cos\gamma=\overline{O_1U}\cdot\cos(F+\gamma) \quad (12)$$

and $\overline{O_1U}+(\overline{OH}-\overline{CU})-\overline{OU}\cdot\sin\gamma=\overline{O_1U}\cdot\sin(F+\gamma)$,

$$(\overline{OH}-\overline{CU})-OU\cdot\sin\gamma=-\overline{O_1U}+\overline{O_1U}\cdot\sin(F+\gamma)$$
$$=-\overline{O_1U}\cdot[1-\sin(F+\gamma)]. \quad (13)$$

Multiply (12) by $[1-\sin(F+\gamma)]$ and (13) by $\cos(F+\gamma)$, add (12) and (13) and simplify.

$$[\overline{OU}+(\overline{OC}\cdot\sin\Delta+\overline{PD})\sin F-(\overline{OH}-\overline{CU})\cos F]\cos\gamma$$
$$+[(\overline{OC}\cdot\sin\Delta+\overline{PD})\cos F+(\overline{OH}-\overline{CU})\sin F]\sin\gamma$$
$$=\overline{OC}\cdot\sin\Delta+\overline{PD}+\overline{OU}\cdot\sin F. \quad (14)$$

Let $\tan\rho$

$$=\frac{(\overline{OC}\cdot\sin\Delta+\overline{PD})\cos F+(\overline{OH}-\overline{CU})\sin F}{\overline{OU}+(\overline{OC}\cdot\sin\Delta+\overline{PD})\sin F-(\overline{OH}-\overline{CU})\cos F}. \quad (15)$$

$$\tan\rho=\frac{(R\cdot\sin\Delta+\overline{PD})\cos F+[R\cdot\cos\Delta-\frac{1}{2}(G+c)]\sin F}{[R+\frac{1}{2}(G+c)]+(R\cdot\sin\Delta+\overline{PD})\sin F-[R\cdot\cos\Delta-\frac{1}{2}(G+c)]\cos F} \quad (16)$$

which may also be written

$$\tan\rho=\frac{R\cdot\sin(\Delta+F)+\overline{PD}\cdot\cos F-\frac{1}{2}(G+c)\sin F}{R\cdot\operatorname{vers}(\Delta+F)+\overline{PD}\cdot\sin F+\frac{1}{2}(G+c)(1+\cos F)}.$$

Solve for ρ.

Also we may write

$$A\cdot\sin\rho=(\overline{OC}\cdot\sin\Delta+\overline{PD})\cos F+(\overline{OH}-\overline{CU})\sin F. \quad (17)$$

$$A\cdot\cos\rho=[\overline{OU}+(\overline{OC}\sin\Delta+\overline{PD})\sin F-(\overline{OH}-\overline{CU})\cos F] \quad (18)$$

From which by squaring, adding and solving for A^2 we have

$$A^2=(\overline{OC}\cdot\sin\Delta+\overline{PD})^2+\overline{OU}^2+(\overline{OH}-\overline{CU})^2$$
$$+2\cdot\overline{OU}\cdot[(\overline{OC}\cdot\sin\Delta+PD)\sin F-(\overline{OH}-\overline{CU})\cos F].$$

$$A^2=(R\cdot\sin\Delta+\overline{PD})^2+[R+\tfrac{1}{2}(G+c)]^2+[R\cdot\cos\Delta-\tfrac{1}{2}(G+c)]^2$$
$$+2\cdot[R+\tfrac{1}{2}(G+c)]\cdot\{(R\cdot\sin\Delta+\overline{PD})\sin F$$
$$-[R\cdot\cos\Delta-\tfrac{1}{2}(G+c)]\cos F\}. \quad (19)$$

Solve for A.

From (14), (17) and (18),

$$A\cos\rho\cos\gamma+A\sin\rho\sin\gamma=\overline{OC}\cdot\sin\Delta+\overline{PD}+\overline{OU}\cdot\sin F.$$

Divide by A and simplify.

$$\cos(\gamma - \rho) = \frac{R \cdot \sin\Delta + \overline{PD} + [R + \frac{1}{2}(G + c)] \cdot \sin F}{A}. \quad (20)$$

Solve for $(\gamma - \rho)$. Since ρ was obtained from (16), γ is known. But

$$\gamma = 90 - \Delta + \phi.$$

$$\therefore \quad \phi = (\gamma + \Delta) - 90. \quad (21)$$

$$\overline{DC} = 2 \cdot R \cdot \sin\frac{\phi}{2}. \quad (22)$$

$$\phi_1 = \Delta - (F + \phi). \quad (23)$$

From (12),

$$\overline{O_1U} = \frac{(\overline{OC} \cdot \sin\Delta + \overline{PD}) - \overline{OU} \cdot \cos\gamma}{\cos(F + \gamma)}.$$

$$\therefore R_1 = \frac{R \cdot \sin\Delta + \overline{PD} - \left(R + \frac{G + c}{2}\right) \cdot \cos\gamma}{\cos(F + \gamma)} - \frac{G + c}{2}. \quad (24)$$

$$T_1 = R_1 \cdot \tan\frac{\phi_1}{2}. \quad (25)$$

$$\overline{DI_1} = \overline{DP} - \overline{I_1P} = \overline{DP} - R_1 \cdot \tan\frac{\phi_1}{2}. \quad (26)$$

Summary of Problem 15

Case 1. *Given R and R_1, N, K, c, F, G and Δ.*

$$\tan\tfrac{1}{2}(F - 2\theta) = \frac{R - R_1}{R + R_1 + G + c}\tan\tfrac{1}{2}F. \quad (1)$$

$$\cos\beta = \frac{(R \cdot \cos\Delta + R_1)\sin\theta}{\left(R_1 + \frac{G + c}{2}\right)\sin F}. \quad (2)$$

$$\phi = \Delta - (\beta + \theta). \quad (3)$$

$$x = \left(2 \cdot R \cdot \sin\frac{\phi}{2}\right) + K. \quad (4)$$

$$= \text{Approximately } \frac{\phi \times 100}{D} + K,$$

where ϕ and D are in degrees and decimals.

$$\phi_1 = \beta - (F - \theta). \tag{5}$$

$$\overline{PH} = \frac{\left(R_1 + \frac{G+c}{2}\right) \cdot \sin F}{\sin \theta} \cdot \sin \beta. \tag{6}$$

$$\overline{PD} = \overline{PH} - R \cdot \sin \Delta. \tag{7}$$

$$T_1 = R_1 \cdot \tan \frac{\phi_1}{2}. \tag{8}$$

Case 2. *Given* $\overline{DC}$, R, N, K, c, F, G *and* Δ.

$$\phi = 2 \cdot \sin^{-1} \frac{\overline{DC}}{2R}.$$

$$\phi_1 = \Delta - (F + \phi).$$

$$R_1 = \frac{\left(R + \frac{G+c}{2}\right) \cdot \cos(\Delta - \phi) - R \cdot \cos \Delta + \frac{G+c}{2} \cos \phi_1}{1 - \cos \phi_1}$$

$$= \frac{R[\cos(\Delta - \phi) - \cos \Delta] + \frac{G+c}{2}[\cos(\Delta - \phi) + \cos \phi_1]}{\text{vers } \phi_1}. \tag{9}$$

$$\overline{DP} = \left(R + \frac{G+c}{2}\right) \cdot \sin(\Delta - \phi) + \left(R_1 + \frac{G+c}{2}\right) \cdot \sin \phi_1 - R \cdot \sin \Delta. \tag{10}$$

$$\overline{DI_1} = \overline{DP} - R_1 \cdot \tan \frac{\phi_1}{2}. \tag{11}$$

Case 3. *Given* $\overline{DP}$, R, N, K, c, F, G *and* Δ.

$$\tan \rho = \frac{(R \cdot \sin \Delta + \overline{PD}) \cdot \cos F + \left(R \cdot \cos \Delta - \frac{G+c}{2}\right) \sin F}{\left(R + \frac{G+c}{2}\right) + (R \cdot \sin \Delta + \overline{PD}) \cdot \sin F - \left(R \cdot \cos \Delta - \frac{G+c}{2}\right) \cdot \cos F} \tag{16}$$

Solve for ρ.

$$A^2 = (R \cdot \sin \Delta + \overline{PD})^2 + \left(R + \frac{G+c}{2}\right)^2 + \left(R \cdot \cos \Delta - \frac{G+c}{2}\right)^2$$
$$+ 2 \cdot \left(R + \frac{G+c}{2}\right) \cdot \left[(R \cdot \sin \Delta + \overline{PD}) \sin F - \left(R \cdot \cos \Delta - \frac{G+c}{2}\right) \cos F\right]. \tag{19}$$

Solve for A.

$$\cos(\gamma - \rho) = \frac{R \cdot \sin \Delta + \overline{PD} + \left(R + \frac{G + c}{2}\right) \sin F}{A}. \quad (20)$$

Solve for γ.

$$\phi = (\gamma + \Delta) - 90. \quad (21)$$

$$\overline{DC} = 2 \cdot R \cdot \sin \frac{\phi}{2}. \quad (22)$$

$$x = \overline{DC} + K.$$

$= \text{approximately } \frac{\phi \times 100}{D} + K$, where ϕ and D are in degrees and decimals.

$$\phi_1 = \Delta - (F + \theta). \quad (23)$$

$$R_1 = \frac{R \cdot \sin \Delta + \overline{PD} - \left(R + \frac{G + c}{2}\right) \cos \gamma}{\cos(F + \gamma)} - \frac{G + c}{2}. \quad (24)$$

$$T_1 = R_1 \cdot \tan \frac{\phi_1}{2}. \quad (25)$$

$$\overline{DI_1} = \overline{DP} - T_1. \quad (26)$$

To solve Problem 15, Case 3, is not extremely difficult, as it will be noted that a number of the quantities necessary to be calculated are the same in the various equations. However for all practical purposes it is generally sufficiently accurate to solve graphically not only Case 3, Problem 15, but all the cases of both Problem 15 and Problem 16.

Thus in Problem 15, Case 1 (Refer to Fig. 10),

(a) Draw accurately to as large scale as convenient the center line *ABCDE*. At any point *D* lay off a tangent to the curve, as *DL*. Draw DI_1P, the center line of the given straight track, making with the tangent, *DL*, the angle $I_1DL = \Delta$.

(b) On tracing cloth strike an arc of indefinite length with the radius of arc *ABCDE*. At any point on this arc, say *C*, draw a chord toward *B* equal to the length of the frog. Extend this chord from *C* a distance $NG + K$. From this point lay off the frog angle *F* towards *Q* and on this line measure $NG + K$ which will give *Q*, the point opposite the heel of the frog. Tangent to the last line at *Q* draw an arc

of indefinite length and of radius R_1. Place the tracing over the original drawing and, keeping the arc $ABCDE$ of the tracing coincident with the arc $ABCDE$ of the drawing, move the tracing around the original arc until the curve tangent at Q is also tangent to the given straight line DI_1P. Prick the points P, C and Q through on the original drawing.

Case 2. *When $\overline{DC}$ is fixed.*

(a) Proceed as in Case 1, (a).

(b) On the original drawing locate C from D since $\overline{DC}$ is fixed. From C draw a chord $\overline{CB}$ equal to the length of the frog. Extend this chord from C through B a distance equal to $NG + K$. From this point lay off the frog angle F toward Q. On this line measure $NG + K$ which gives Q, the point opposite the heel of the frog and also the P. C. of the connecting curve. Extend this line to intersect the given straight line, DI_1P, at I_1. Measure $\overline{QI_1} = T_1$ and angle $QID = \phi_1$. Then make $\overline{I_1P} = \overline{QI_1}$. $R_1 = T_1 \cot \frac{\phi_1}{2}$ and $D_1 = 2 \cdot \sin^{-1} \frac{50}{R_1}$.

Case 3. *When $\overline{PD}$ is fixed.*

(a) Proceed as in Case 1, (a).

(b) On tracing cloth strike an arc of indefinite length with radius R equal radius of arc $ABCDE$ of the original drawing. From any point C to B draw a chord equal to the length of the frog. Extend this chord from C through B a distance equal to $NG + K$. From this last point lay off the frog angle F towards Q. On this line measure $NG + K$, which gives the point Q opposite the heel of the frog. Extend this line indefinitely. Place the tracing over the original drawing and, keeping the arcs $ABCDE$ coincident, move the tracing around the original curve until $\overline{QI_1} = I_1\overline{P}$. Prick the points I_1, Q and C through on the original. Measure $\overline{QI_1} = \overline{I_1P} = T_1$. Measure angle $QI_1D = \phi_1$. Also measure $\overline{DC}$ and angle $DOC = \phi$. $R_1 = T_1 \cot \frac{\phi_1}{2}$ and $D_1 = 2 \cdot \sin^{-1} \frac{50}{R_1}$.

The rail lines may be used in the above graphical methods, if preferred. The author has always preferred to work from the center lines so that the work in the office and the field may be on the same basis. The various cases of Problem 16 may be solved in a similar manner.

Problem 16, Case 1.

To locate the frog point for a spur track diverging at any angle from the inside of a curved main track, using simple curve tangent to the heel of the frog.

When $R \cos \Delta < R_1$.

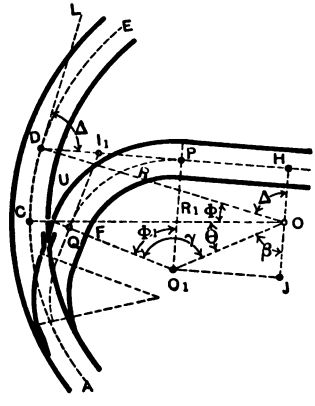

Fig 11.

Given: R = Radius of center line main track,
R_1 = Radius of center line of connecting track tangent to heel of frog and diverging track,
N = Frog number,
K = Distance from point to heel of frog,
c = Spread of frog at heel,
F = Frog angle,
G = Gage of tracks.

Measure $\Delta = \measuredangle LDH$ = angle of intersection between HPD, the center line of the diverging track produced, and DL, the tangent to the center line of the main track curve at the point of intersection.

Required:

ϕ = Center angle main track curve between the point of intersection D and the heel of the frog C,

$x = \overline{DC}$ = Chord of main track curve between D and C, plus K.
ϕ_1 = Center angle of connecting curve,
$T_1 = \overline{QI_1} = \overline{I_1P}$ = tangent distance to connecting curve,
$\overline{DP}$ = Distance from point of intersection D to point of tangency P of connecting curve,
$\overline{DI_1}$ = Distance from D to the point of intersection of the tangents to the connecting curve.

Let $ACDE$ = Center line of main track,
HP = Center line of diverging track,
HPD = Center line of diverging track produced,
DL = Tangent to center line of main track at D, point of intersection with HD.

Let O be the center of the main track curve. From O draw $\overline{OD} = R$. Draw $\overline{OC} \perp$ to frog at heel. Let O_1 be the center of the connecting curve. Join OO_1. Through O draw $JOH \perp$ to PH at H. From O_1 draw $O_1P \perp$ to PH at P and equal to R_1. Draw $O_1Q \perp$ to other point rail of frog at heel. Extend O_1Q to intersect OC at U. From O_1 draw $O_1J \parallel$ to PH.

$\overline{CU} = \overline{QU} = \frac{1}{2}G + \dfrac{\frac{c}{2}}{\cos\frac{1}{2}F}$, which may be written without appreciable error.

$$\overline{CU} = \overline{QU} = \tfrac{1}{2}(G + c).$$
$$\overline{OU} = R - \tfrac{1}{2}(G + c).$$
$$\overline{O_1U} = R_1 + \tfrac{1}{2}(G + c).$$
$$\measuredangle UOO_1 = \theta. \qquad \measuredangle OO_1U = \gamma. \qquad (\gamma + \theta) = 180° - F.$$

$$\frac{\overline{OU} + \overline{O_1U}}{\overline{OU} - \overline{O_1U}} = \frac{\tan\frac{1}{2}(\gamma + \theta)}{\tan\frac{1}{2}(\gamma - \theta)} = \frac{\tan\frac{1}{2}(180 - F)}{\tan\frac{1}{2}[180 - (F + 2\theta)]}$$

$$= \frac{\cot\frac{1}{2}F}{\cot\frac{1}{2}(F + 2\theta)} = \frac{\tan\frac{1}{2}(F + 2\theta)}{\tan\frac{1}{2}F}.$$

$$\therefore \quad \tan\frac{1}{2}(F + 2\theta) = \frac{R + R_1}{R - R_1 - G - c}\tan\frac{1}{2}F. \qquad (1)$$

Solve for θ.

$$\gamma = 180 - (F + \theta).$$

$$\overline{OH} = \overline{OD} \cdot \cos \measuredangle DOH = R \cdot \cos \Delta.$$

$$\overline{OJ} = \overline{JH} - \overline{OH} = \overline{PO_1} - \overline{OH} = R_1 - R \cdot \cos \Delta.$$

Solve for $\overline{OJ}$.

$$\overline{O_1O} : \overline{O_1U} :: \sin \measuredangle OUO_1 : \sin \measuredangle UOO_1.$$

$$\overline{O_1O} = \frac{\left(R_1 + \frac{G + c}{2}\right) \sin F}{\sin \theta}.$$

Solve for $\overline{O_1O}$.

$$\cos \beta = \cos \measuredangle O_1OJ = \frac{\overline{OJ}}{\overline{O_1O}} = \frac{(R_1 - R \cdot \cos \Delta) \sin \theta}{\left(R_1 + \frac{G + c}{2}\right) \sin F}. \tag{2}$$

Solve for β.

$$\phi = 180 - (\Delta + \theta + \beta). \tag{3}$$

$$x = \overline{CD} + K = \left(2 \cdot R \cdot \sin \frac{\phi}{2}\right) + K \tag{4}$$

$$= \text{approximately}$$

$$\frac{\phi \text{ (in degrees and decimals of a degree)} \times 100}{D \text{ (degree of curved track in degrees and decimals)}} + K.$$

$$\phi_1 = (\gamma - \beta) = 180 - (F + \theta + \beta). \tag{5}$$

$$T_1 = R_1 \cdot \tan \frac{\phi_1}{2}. \tag{6}$$

$$\begin{aligned} \overline{DP} &= \overline{DH} - \overline{PH} = \overline{DO} \cdot \sin \measuredangle DOH - \overline{O_1J} \\ &= \overline{DO} \cdot \sin \measuredangle DOH - \overline{O_1O} \cdot \sin \measuredangle O_1OJ \\ &= R \cdot \sin \Delta - \overline{O_1O} \cdot \sin \beta. \end{aligned} \tag{7}$$

$$\overline{DI_1} = \overline{DP} - T_1. \tag{8}$$

The above demonstration is entirely general and, by giving the various trigonometric functions their proper sign, will solve correctly all the special cases of Problem 16 herein demonstrated, i.e., Cases 1, 2, 3, and 4.

Problem 16, Case 2.

When $R \cdot \cos \Delta = R_1$.

$$\tan \frac{1}{2} (F + 2\theta) = \frac{R + R_1}{R - R_1 - G - c} \tan \frac{1}{2} F. \tag{1}$$

Solve for θ.

$$\gamma = 180 - (F + \theta). \tag{2}$$

$$\phi = 90 - (\Delta + \theta). \tag{3}$$

$$x = \overline{DC} + K = \left(2 \cdot R \cdot \sin \frac{\phi}{2}\right) + K \tag{4}$$

$$= \text{approximately} \left(\frac{\phi}{D} \times 100\right) + K,$$

where ϕ and D are in degrees and decimals.

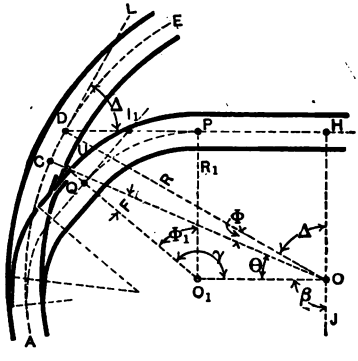

Fig. 12.

$$\phi_1 = \gamma - 90 = 180 - (F + \theta + \beta). \tag{5}$$

$$T_1 = R_1 \cdot \tan \frac{\phi_1}{2}. \tag{6}$$

$$\overline{DP} = \overline{DH} - \overline{PH} = R \cdot \sin \Delta - \frac{\left(R_1 + \frac{G + c}{2}\right) \sin F}{\sin \theta}. \tag{7}$$

$$\overline{DI_1} = \overline{DP} - \overline{I_1P} = \overline{DP} - T_1. \tag{8}$$

Problem 16, Case 3.

When $R \cdot \cos \Delta > R_1$.

$$\tan \frac{1}{2}(F + 2\theta) = \frac{R + R_1}{R - R_1 - G - c} \tan \frac{1}{2} F. \tag{1}$$

Solve for θ.

$$\gamma = 180 - (F + \theta).$$

$$\overline{OJ_1} = \overline{OH} - \overline{J_1H} = \overline{OH} - \overline{O_1P} = R \cdot \cos \Delta - R_1.$$

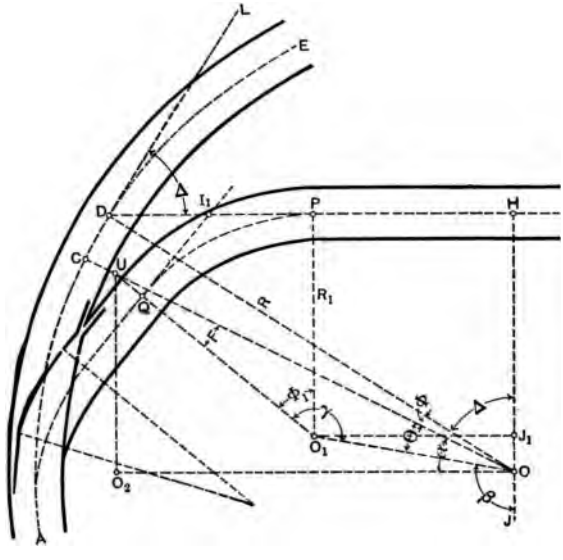

Fig. 13.

Solve for $\overline{OJ_1}$.

$$\overline{OO_1} : \overline{O_1U} :: \sin \measuredangle O_1UO : \sin \measuredangle O_1OU.$$

$$\overline{OO_1} = \frac{\left(R_1 + \dfrac{G + c}{2}\right) \sin F}{\sin \theta}.$$

Solve for $\overline{OO_1}$.

$$\cos \measuredangle O_1OJ = \cos (180 - \measuredangle O_1OJ) = \cos (180 - \beta)$$

$$= \frac{\overline{O_1J}}{\overline{OO_1}} = \frac{(R \cdot \cos \Delta - R_1) \sin \theta}{\left(R_1 + \dfrac{G + c}{2}\right) \sin F}.$$

Solve for β.

$\cos(180-\beta) = -\cos\beta.$

$$\therefore \quad \cos\beta = \frac{(R_1 - R\cdot\cos\Delta)\sin\theta}{\left(R_1 + \frac{G+c}{2}\right)\sin F}. \tag{2}$$

$$\phi = 180 - (\Delta + \theta + \beta). \tag{3}$$

$$x = \overline{DC} + K = \left(2\cdot R\cdot\sin\frac{\phi}{2}\right) + K \tag{4}$$

$$= \text{approximately } \frac{\phi\times 100}{D} + K,$$

where ϕ and D are in degrees and decimals.

$$\phi_1 = (\gamma - \beta) = 180 - (F + \theta + \beta). \tag{5}$$

$$T_1 = R_1\cdot\tan\frac{\phi_1}{2}. \tag{6}$$

$$\overline{DP} = \overline{DH} - \overline{PH} = \overline{DH} - \overline{O_1J_1}$$

$$= \overline{DO}\cdot\sin\measuredangle DOH - \overline{O_1O}\cdot\sin\measuredangle(180 - O_1OJ)$$

$$= R\cdot\sin\Delta - \overline{O_1O}\cdot\sin\beta. \tag{7}$$

$$\overline{DI_1} = \overline{DP} - T_1. \tag{8}$$

Problem 16, Case 4.

Where $\Delta > 90°$.

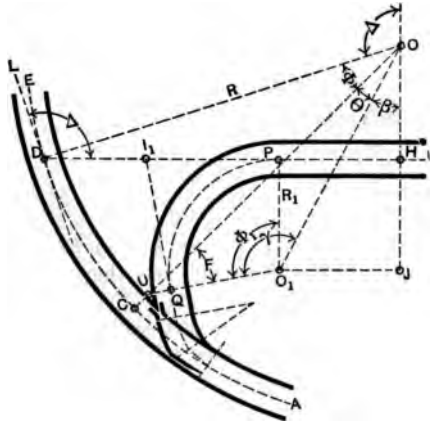

Fig. 14.

$$\tan\frac{1}{2}(F + 2\theta) = \frac{R + R_1}{R - R_1 - G - c}\tan\frac{1}{2}F. \tag{1}$$

Solve for θ. Then $\gamma = 180 - (F + \theta)$.

$$\overline{OJ} = \overline{OH} + \overline{HJ} = \overline{DO} \cdot \cos \measuredangle DOH + \overline{PO_1}$$
$$= R \cdot \cos (180 - \Delta) + R_1 = R_1 - R \cdot \cos \Delta.$$

Solve for $\overline{OJ}$.

$$\overline{OO_1} : \overline{O_1U} :: \sin \measuredangle O_1UO : \sin \measuredangle O_1OU.$$

$$\overline{OO_1} = \frac{\left(R_1 + \frac{G + c}{2}\right) \cdot \sin F}{\sin \theta}.$$

Solve for $\overline{OO_1}$.

$$\cos \beta = \cos \measuredangle O_1OJ = \frac{\overline{OJ}}{\overline{OO_1}} = \frac{(R_1 - R \cdot \cos \Delta) \sin \theta}{\left(R_1 + \frac{G + c}{2}\right) \cdot \sin F}. \quad (2)$$

Solve for β.

$$\phi = 180 - (\Delta + \theta + \beta). \quad (3)$$

$$x = \overline{DC} + K = \left(2 \cdot R \cdot \sin \frac{\phi}{2}\right) + K \quad (4)$$
$$= \text{approximately } \frac{\phi \times 100}{D} + K,$$

where ϕ and D are expressed in degrees and decimals.

$$\phi_1 = (\gamma - \beta). \quad (5)$$

$$T_1 = R_1 \cdot \tan \frac{\phi_1}{2}. \quad (6)$$

$$\overline{DP} = \overline{DH} - \overline{PH} = \overline{DH} - \overline{O_1J} = \overline{DO} \cdot \sin \measuredangle DOH$$
$$- \overline{OO_1} \cdot \sin \measuredangle O_1OJ = R \cdot \sin (180 - \Delta) - OO_1 \cdot \sin \beta.$$
$$= R \cdot \sin \Delta - \overline{OO_1} \cdot \sin \beta. \quad (7)$$

$$DI_1 = \overline{DP} - T_1. \quad (8)$$

Problem 16, Case 5.

Where $\overline{DC}$ is fixed.

In either of the Cases 1, 2, 3, or 4 when $\overline{DC}$ is fixed the radius R_1 of the connecting curve and the other necessary distances and angles for the solution of the problem may be determined as follows, care being taken to use the proper algebraic signs of the trigonometric functions.

Take Case 3, Fig. 13, since $\overline{DC}$ is fixed and known.

$$\phi = 2 \cdot \sin^{-1} \frac{\overline{DC}}{2R}. \quad (1)$$

$$\phi_1 + F = \Delta + \phi.$$

$$\therefore \quad \phi_1 = (\Delta + \phi) - F. \quad (2)$$

SWITCH LAYOUTS — M.C.R.R. STANDARDS.

Gauge = 4'-8½" = 4.708' G = P.F. C = P.C.

GE = $\frac{\text{gauge}}{2}$ = 2.354 log GE = 0.37181

F = Frog Angle AE = 2.354 cot F

AG = $\frac{2.354}{\sin F}$ BD = $\frac{AD \sin F}{\sin I}$

R = T cot Δ/2 T = R tan Δ/2 Δ = I − F

CD = DT = R tan Δ/2 AD = AE + EC + CD

AB = AD cos F − AD sin F cot I

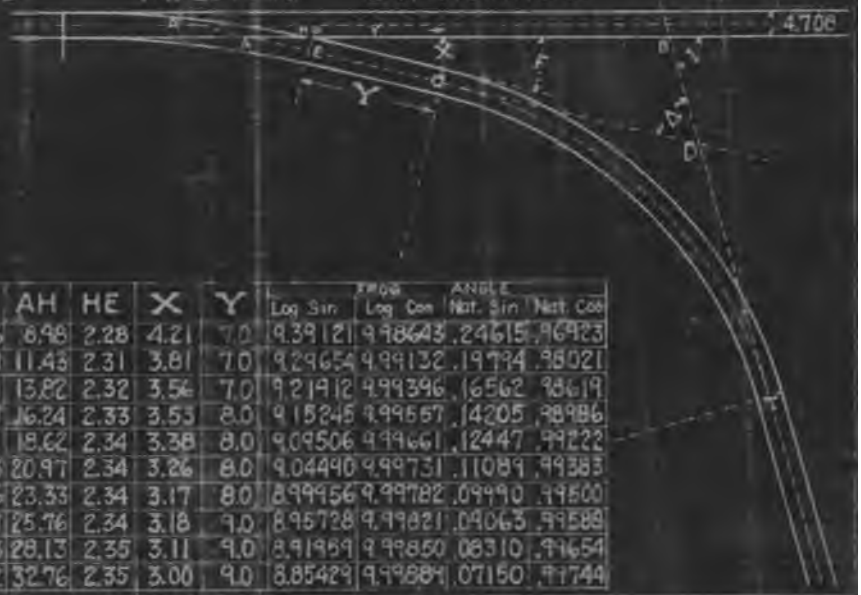

No.	Frog Angle	Lead	Degree Curve	AG	AE	AG	AH	HE	X	Y	Frog Angle Log Sin	Frog Angle Log Cos	Frog Angle Nat. Sin	Frog Angle Nat. Cos
4	14°-15'	42.28	52°-51'	18.63	9.27	9.56	8.98	2.28	4.21	7.0	9.39121	9.98643	.24615	.96923
5	11°-25'	49.23	37°-44'	23.65	11.66	11.89	11.43	2.31	3.81	7.0	9.29654	9.99132	.19794	.98021
6	9°-32'	56.47	27°-31'	28.23	14.02	14.21	13.82	2.32	3.56	7.0	9.21912	9.99396	.16562	.98619
7	8°-10'	61.45	14°-33'	32.97	16.40	16.57	16.24	2.33	3.53	8.0	9.15245	9.99557	.14205	.98986
8	7°-09'	67.12	10°-48'	37.68	18.77	18.91	18.62	2.34	3.38	8.0	9.09506	9.99661	.12447	.99222
9	6°-22'	72.43	8°-8'	42.33	21.10	21.23	20.97	2.34	3.26	8.0	9.04490	9.99731	.11089	.99383
10	5°-44'	77.41	6°-33'	47.01	23.45	23.56	23.33	2.34	3.17	8.0	8.99956	9.99782	.09990	.99500
11	5°-12'	80.00	5°-54'	51.84	25.87	25.97	25.76	2.34	3.18	9.0	8.95728	9.99821	.09063	.99588
12	4°-46'	87.01	4°-15'	56.56	28.23	28.33	28.13	2.35	3.11	9.0	8.91959	9.99850	.08310	.99654
13	4°-06'	105.59	3°-37'	65.76	32.84	32.92	32.76	2.35	3.00	9.0	8.85429	9.99884	.07150	.99744

$$R \cdot \cos\Delta - [R - \tfrac{1}{2}(G+c)] \cdot \cos(\Delta + \phi)$$
$$= R_1 - [R_1 + \tfrac{1}{2}(G+c)] \cdot \cos\phi_1.$$

$$R_1 = \frac{R \cdot \cos\Delta - [R - \tfrac{1}{2}(G+c)] \cdot \cos(\Delta+\phi) + \tfrac{1}{2}(G+c)\cos\phi_1}{\text{vers}\,\phi_1}$$

$$R_1 = \frac{[\cos\Delta - \cos(\Delta+\phi)] + \tfrac{1}{2}(G+c) \cdot [\cos(\Delta+\phi) + \cos\phi_1]}{\text{vers}\,\phi_1}. \quad (3)$$

$$D = \text{Degree of curve} = 2 \cdot \sin^{-1}\frac{50}{R_1}. \quad (4)$$

$$T_2 = \overline{PH} = [R - \tfrac{1}{2}(G+c)] \cdot \sin(\Delta+\phi) - [R_1 + \tfrac{1}{2}(G+c)]\sin\phi_1.$$

$$T = \overline{DH} - \overline{PH} = R \cdot \sin\Delta - [R - \tfrac{1}{2}(G+c)] \cdot \sin(\Delta+\phi)$$
$$+ [R_1 + \tfrac{1}{2}(G+c)] \cdot \sin\phi_1. \quad (5)$$

$$T_2 = R_1 \cdot \tan\frac{\phi_1}{2}. \quad (6)$$

$$T_1 = \overline{DP} - T_1. \quad (7)$$

Problem 16, Case 6.

If for any reason the distance $\overline{DP}$ is fixed, to find the distance $\overline{C}$ and the maximum radius R_1 for the connecting curve so that the point P may be the point of tangency of the connecting curve. For example take Case 3, Fig. 13.

Draw a line through $O \parallel$ to $\overline{DPH}$. Drop a $\perp$ from U upon this line at O_2. Let the angle $UOO_2 = \alpha$. Then

$$\overline{OU} \cdot \cos\alpha = \text{projection of } \overline{OU} \text{ on } \overline{OO_2}.$$
$$\overline{OU} \cdot \sin\alpha = \text{projection of } \overline{OU} \text{ on } \overline{OH}.$$
$$\overline{OU} \cdot \cos\alpha - (\overline{DH} - \overline{PD}) = \text{projection of } \overline{O_1U} \text{ on } \overline{OO_2}.$$
$$\overline{OU} \cdot \sin\alpha - (\overline{OH} - \overline{O_1P}) = \text{projection of } \overline{O_1U} \text{ on } \overline{OH}.$$

$\overline{O_1U}$ makes with $\overline{OO_2}$ the angle $(F + \alpha)$.

$$\therefore \quad \overline{OU} \cdot \cos\alpha - (\overline{DH} - \overline{PD}) = \overline{O_1U} \cdot \cos(F+\alpha) \quad (1)$$

and $\quad \overline{OU} \cdot \sin\alpha - (\overline{OH} - \overline{O_1P}) = \overline{O_1U} \cdot \sin(F+\alpha).$

$$\overline{OU} \cdot \sin\alpha - [(\overline{OH} + \overline{QU}) - (\overline{O_1P} + \overline{QU})] = \overline{OU_1} \cdot \sin(F+\alpha).$$

$$\overline{OU} \cdot \sin\alpha - (\overline{OH} + \overline{QU}) = \overline{O_1U} \cdot \sin(F+\alpha) - \overline{O_1U}$$
$$= -\overline{O_1U}[1 - \sin(F+\alpha)]. \quad (2)$$

Multiply (1) by $[1 - \sin(F+\alpha)]$ and (2) by $\cos(F+\alpha)$, add (1) and (2) and simplify:

$$[\overline{OU} + (\overline{DH} - \overline{PD})\sin F - (\overline{OH} + \overline{QU})\cos F]\cos\alpha$$
$$+ [(\overline{DH} - \overline{PD})\cos F + (\overline{OH} + \overline{QU})\sin F]\sin\alpha$$
$$= \overline{DH} - \overline{PD} + \overline{OU} \cdot \sin F. \quad (3)$$

$$\text{Let } \tan\rho = \frac{(\overline{DH} - \overline{PD})\cos F + (\overline{OH} + \overline{QU})\sin F}{\overline{OU} + (\overline{DH} - \overline{PD})\sin F - (\overline{OH} + \overline{QU})\cos F}.$$

$$\tan\rho = \frac{(R\cdot\sin\Delta - \overline{PD})\cos F + [R\cdot\cos\Delta + \frac{1}{2}(G+c)]\sin F}{[R - \frac{1}{2}(G+c)] + (R\cdot\sin\Delta - \overline{PD})\sin F - [R\cdot\cos\Delta + \frac{1}{2}(G+c)]\cos F} \tag{4}$$

which might be written

$$\tan\rho = \frac{R\cdot\sin(\Delta + F) - \overline{PD}\cdot\cos F + \frac{1}{2}(G+c)\sin F}{R\cdot\text{vers}(\Delta + F) - \overline{PD}\cdot\sin F - \frac{1}{2}(G+c)(1+\cos F)}.$$

We may also write

$$A\sin\rho = (\overline{DH} - \overline{PD})\cos F + (\overline{OH} + \overline{QU})\sin F \tag{5}$$

and $A\cos\rho = \overline{OU} + (\overline{DH} - \overline{PD})\sin F - (\overline{OH} + \overline{QU})\cos F$. (6)

Square, add, simplify (5) and (6) and solve for A^2.

$$A^2 = [(\overline{DH} - \overline{PD})\cos F + (\overline{OH} + \overline{QU})\sin F]^2 + [\overline{OU} + (\overline{DH} - \overline{PD})\sin F - (\overline{OH} + \overline{QU})\cos F]^2.$$

$$A^2 = \overline{OU}^2 + (\overline{DH} - \overline{PD})^2 + (\overline{OH} + \overline{QU})^2 + 2\cdot\overline{OU}\cdot[(\overline{DH} - \overline{PD})\sin F - (\overline{OH} + \overline{QU})\cos F]$$

$$A^2 = [R - \tfrac{1}{2}(G+c)]^2 + (R\cdot\sin\Delta - \overline{PD})^2 + [R\cdot\cos\Delta + \tfrac{1}{2}(G+c)]^2 + 2\cdot[R - \tfrac{1}{2}(G+c)]\cdot\{(R\cdot\sin\Delta - \overline{PD})\cdot\sin F - [R\cdot\cos\Delta + \tfrac{1}{2}(G+c)]\cos F\}. \tag{7}$$

Solve for A.

Then from (3), (5) and (6),

$$A\cos\rho\cos\alpha + A\sin\rho\sin\alpha = \overline{DH} - DP + \overline{OU}\cdot\sin F.$$

Divide by A and simplify.

$$\cos(\alpha - \rho) = \frac{R\cdot\sin\Delta - \overline{DP} + [R - \frac{1}{2}(G+c)]\sin F}{A}. \tag{8}$$

Solve for $(\alpha - \rho)$. Then since ρ is known from (4), α becomes known and

$$\phi = 90° - (\Delta + \alpha). \tag{9}$$

$$x = \overline{DC} + K = \left(2\cdot R\cdot\sin\frac{\phi}{2}\right) + K. \tag{10}$$

= approximately

$$\frac{\phi\text{ (in degrees and decimals of a degree)} \times 100}{D\text{ (degree of curved track curve in degrees and decimals)}} + K.$$

From (1)

$$R_1 = \frac{[R \cdot - \frac{1}{2}(G+c)]\cos\alpha - R \cdot \sin\Delta + \overline{PD}}{\cos(F+\alpha)} - \frac{1}{2}(G+c). \quad (11)$$

$$\phi_1 = 90° - (F+\alpha). \quad (12)$$

$$T_1 = R_1 \cdot \tan\frac{\phi_1}{2}. \quad (13)$$

$$\overline{DI_1} = \overline{DP} - T_1. \quad (14)$$

As a general proposition R_1 should never be greater than R, though in case the frog point comes near the P. T. of the main track curve, it might be practicable to use $R_1 > R$.

When $\Delta = 90°$ it is evident that the center line of the diverging track, or the center line produced, passes through the center of the main track curve, in which case maximum $R_1 = \frac{R-(G+c)}{2\cos F}$ (approximately).

When $\Delta > 90°$ the center line of the diverging track passes between the main track at the turnout and the center of the main track curve, and

$$\text{maximum } R_1 = \frac{R \text{ covers } (\Delta - 90°) - (G+c)}{2\cos F} \text{ approximately.}$$

When the center line of the diverging track falls beyond the center of the main track curve, considered from the switch $\Delta < 90°$ and for any given values of R_1, R and F,

$$\text{maximum } \Delta = \cos^{-1}\frac{R_1 \sin(F+\theta) - [R - \frac{1}{2}(G+c)]\sin F}{R\sin(F+\theta)}$$

and approaches 90° as

$$R_1 - \frac{[R - \frac{1}{2}(G+c)]\sin F}{\sin(F+\theta)} \text{ approaches zero.}$$

When Δ is maximum $\phi = 180° - (\Delta + \theta)$,

$$\phi_1 = 180° - (F+\theta) = (180° - \gamma).$$

CHAPTER III

Crossovers

Problem 17.

To locate the frog points for a crossover between parallel tracks, using frogs of same number and straight track heel to heel of frogs.

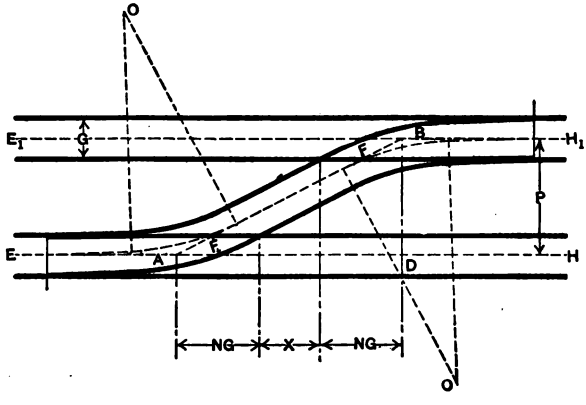

Fig. 15.

Given: N = Frog number,
F = Frog angle,
G = Gage of tracks,
P = Perpendicular distance center to center of tracks.

Required: x = Distance point to point of frogs measured $\parallel$ to center line of either main track.

Let EH and E_1H_1 represent the center lines of the main tracks.

Let AB be the center line of the crossover $\parallel$ to the frogs and intersecting EH at A and E_1H_1 at B. Drop a $\perp$ from B upon EH at D. $\measuredangle BAD$ equals F.

$\overline{AD} = \overline{BD} \cot \measuredangle BAD = P \cdot \cot F.$

Since the frogs are of the same number the distance from A and B to the point of frog $= NG$.

$\overline{AD} = 2\,NG + x = P \cdot \cot F.$

$\therefore \quad x = P \cdot \cot F - 2\,NG.$

An approximate formula for x is

$$x = N\,(P - 2\,G)$$

which is slightly in error, the error decreasing as N increases. A more correct formula is

$$x = N\,(P - 2\,G) - \frac{P}{4\,N}.$$

Problem 18.

To locate the frog points for a crossover between parallel tracks using frogs of different number and simple curve tangent to heels of frogs.

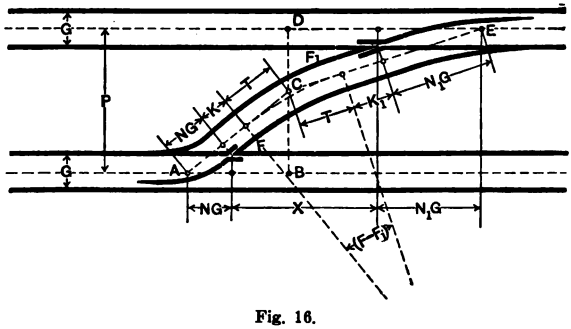

Fig. 16.

Given: N and $N_1 =$ Frog numbers,
F and $F_1 =$ Frog angles, $(F > F_1)$
K and $K_1 =$ Distance point to heel of frogs,
$G =$ Gage of tracks,
$P =$ Perpendicular distance center to center of tracks.

Required: $x =$ Distance point to point of frogs measured $\parallel$ to center line of either main track,
$R =$ Radius of curve tangent to heels of frogs.

In Fig. 16 let DE and AB represent the center lines of the given parallel tracks.

Let $\overline{AC}$ be the center line of the crossover $\parallel$ to frog F and let $\overline{CE}$ be the center line of the crossover $\parallel$ to frog F_1. Let

$P = \perp$ distance center to center of given parallel tracks. Through C draw $\overline{BD} \perp$ to parallel tracks. T = tangent distance.

$$\overline{AC} = NG + K + T.$$
$$\overline{CE} = N_1G + K_1 + T.$$
$$P = \overline{BC} + \overline{CD} = (NG + K + T)\sin F + (N_1G + K_1 + T)\sin F_1.$$
$$\therefore \quad T = \frac{P - [(NG + K)\sin F + (N_1G + K_1)\sin F_1]}{\sin F + \sin F_1}. \tag{1}$$
$$x = \overline{AB} + \overline{DE} - (NG + N_1G) = (NG + K + T)\cos F + (N_1G + K_1 + T)\cos F_1 - (NG + N_1G). \tag{2}$$

Substituting for T in (2) the value given in (1) and simplifying,

$$x = \left\{[(N_1G + K_1) - (NG + K)]\frac{\sin \frac{1}{2}(F - F_1)}{\sin \frac{1}{2}(F + F_1)} - (NG + N_1G)\right\} + P \cdot \cot \tfrac{1}{2}(F + F_1). \tag{3}$$
$$R = T \cot \tfrac{1}{2}(F - F_1). \tag{4}$$

The same result may be obtained by working with the chord of the curve tangent to the heels of the frogs, thus:

$$\text{Chord} = \frac{P - [(NG + K)\sin F + (N_1G + K_1)\sin F_1]}{\sin \frac{1}{2}(F + F_1)}.$$
$$x = (NG + K)\cos F + \text{chord} \times \cos \tfrac{1}{2}(F + F_1) + (N_1G + K_1)\cos F_1 - (NG + N_1G),$$

which reduces to equation (3), and the radius of the curve tangent to the heel of the frog would be given by the equation

$$R = \frac{\text{chord}}{2 \sin \frac{1}{2}(F - F_1)}.$$

In equation (3) it will be noted that for any two given frogs the expression inside of the bracket is constant and that for different values of P, x will vary as the product $P \cdot \cot \frac{1}{2}(F + F_1)$.

It is further interesting to note that if in the beginning P had been reduced by the quantities $(NG \sin F + N_1G \sin F_1)$, then calling this difference $P' = P - (NG \sin F + N_1G \sin F_1)$, and solving for x, we find

$$x = (K_1 - K)\frac{\sin \frac{1}{2}(F - F_1)}{\sin \frac{1}{2}(F + F_1)} + P' \cot \frac{1}{2}(F + F_1),$$

which is of the same form as equation (4), Problem 4, for the switch lead.

The radius of the curve tangent to the heels of the frogs varies as P, since the central angle remains constant, and no practical advantage would be obtained by such a combination when the radius of the curve tangent to the heels of the frogs is less than the radius of the lead curve for the frog of greater angle, frog F, Fig. 16.

For the arrangement given in Problem 18, P should be a minimum when the radius of the curve tangent to the heels of the frogs equals the radius of the lead curve for the frog of greater angle. Calling this radius R_F,

$$T_{\text{minimum}} = R_F \tan \tfrac{1}{2}(F - F_1)$$
$$= \frac{P - [(NG + K)\sin F + (N_1G + K_1)\sin F_1]}{\sin F + \sin F_1}.$$

$$\therefore\ P_{\text{minimum}} = R_F \tan \tfrac{1}{2}(F - F_1)(\sin F + \sin F_1) + [(NG + K)\sin F + (N_1G + K_1)\sin F_1]$$
$$= R_F(\cos F_1 - \cos F) + [(NG + K)\sin F + (N_1G + K_1)\sin F_1]. \qquad (5)$$

Similarly no advantage would be gained in track alignment, and economy of space would be lost, if the radius of the curve tangent to the heels of the frogs was greater than the radius of the lead curve for the frog of less angle, frog F_1 of Fig. 16.

Therefore for the arrangement given in Problem 18, P should be a maximum when the radius of the curve tangent to the heels of the frogs equals the radius of the lead curve for the frog of less angle. Calling this radius R_{F_1},

$$P_{\text{maximum}} = R_{F_1}(\cos F_1 - \cos F) + [(NG + K)\sin F + (N_1G + K_1)\sin F_1]. \qquad (6)$$

For any two given frogs when P is greater than the value given by equation (6) the frog distance should be obtained as follows:

Problem 19.

To locate the frog points for a crossover between parallel tracks, using frogs of different number and simple curve tangent to the heel of the frog of less angle and to the line of the frog of greater angle produced, and to determine the length of the tan-

gent adjacent to the heel of the frog of greater angle, the radius of the given curve being equal to the radius of the lead curve for the frog of less angle.

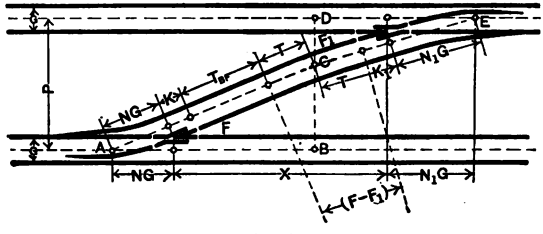

Fig. 17.

Given: N and N_1 = Frog numbers,
F and F_1 = Frog angles, $(F > F_1)$
K and K_1 = Distance point to heel of frogs,
R_{F_1} = Radius of curve tangent to heel of frog F_1 = Radius of lead curve for frog F_1,
G = Gage of tracks,
P = Perpendicular distance center to center of parallel tracks.

Required: T_{BF} = Tangent back of or adjacent to frog F,
x = Distance point to point of frogs measured parallel to the center line of either parallel track.

Under the condition of this arrangement, P cannot be less than maximum P given by equation (6) of the preceding problem, and for this problem such value for P is the minimum; therefore

$$P_{\min} = 2\,R_{F_1} \sin \tfrac{1}{2}(F - F_1) \sin \tfrac{1}{2}(F + F_1) + [(NG + K)\sin F + (N_1G + K_1)\sin F_1], \qquad (1)$$

or

$$= R_{F_1}(\cos F_1 - \cos F) + [(NG + K)\sin F + (N_1G + K_1)\sin F_1].$$

For any value of $P => P_{\min}$

$$P = (NG + K + T_{BF} + T)\sin F + (N_1G + K_1 + T)\sin F_1.$$

$$\therefore\ T_{BF} = \frac{P - [(NG + K + T)\sin F + (N_1G + K_1 + T)\sin F_1]}{\sin F}. \qquad (2)$$

Since R_{F_1} is known,

$$T = R_{F_1} \cdot \tan \tfrac{1}{2}(F - F_1).$$

Substituting this value for T in (2),

$$T_{BF} = \frac{P - \{[R_{F_1} \cdot \tan \frac{1}{2}(F - F_1)(\sin F + \sin F_1)] + [(NG + K)\sin F + (N_1G + K_1)\sin F_1)]\}}{\sin F}$$

$$= \frac{P - \{[R_{F_1}(\cos F_1 - \cos F)] + [(NG + K)\sin F + (N_1G + K_1)\sin F_1]\}}{\sin F}$$

$$= \frac{P - P_{\min}}{\sin F} = (P - P_{\min}) \operatorname{cosec} F. \tag{3}$$

$$x = [(NG + K)\cos F + 2 \cdot R_{F_1} \cdot \sin \tfrac{1}{2}(F - F_1)\cos \tfrac{1}{2}(F + F_1) + (N_1G + K_1)\cos F_1] + T_{BF} \cdot \cos F.$$

Under the conditions of the problem the quantity within the brackets is constant for any two given frogs, and might also have been expressed by equation (3) of Problem 18 by calling $P = P_{\min}$. Substituting the value of T_{BF} given in (3),

$$x = [(NG + K)\cos F + 2 \cdot R_{F_1} \cdot \sin \tfrac{1}{2}(F - F_1)\cos \tfrac{1}{2}(F + F_1) + (N_1G + K)\cos F_1] + (P - P_{\min})\cot F, \tag{4}$$

or

$$= \left\{[(N_1G + K_1) - (NG + K)]\frac{\sin \frac{1}{2}(F - F_1)}{\sin \frac{1}{2}(F + F_1)} - (NG + N_1G)\right\} + P_{\min}\cot \tfrac{1}{2}(F + F_1) + (P - P_{\min})\cot F.$$

Equations (3) and (4) might readily have been written from inspection of the Fig. 17.

When $P = P_{\min}$, then $T_{BF} = 0$ and the last term of equation (4) $= 0$.

In the application of this problem

First: Solve equation (1) for $P_{\min}$.

Second: Solve equation (3) for T_{BF}.

Third: Solve equation (4) for x.

For any given value P', having obtained the value of T_{BF} and x for any other value of P, as long as $P' => P_{\min}$, for any two given frogs

$$T'_{BF} = T_{BF} + (P' - P)\operatorname{cosec} F,$$
$$x' = x + (P' - P)\cot F,$$

attention being given to the algebraic sign.

Problem 20.

To locate the frog points for a crossover between parallel tracks, using frogs of same number and reverse curve of equal radii tangent to the heels of the frogs.

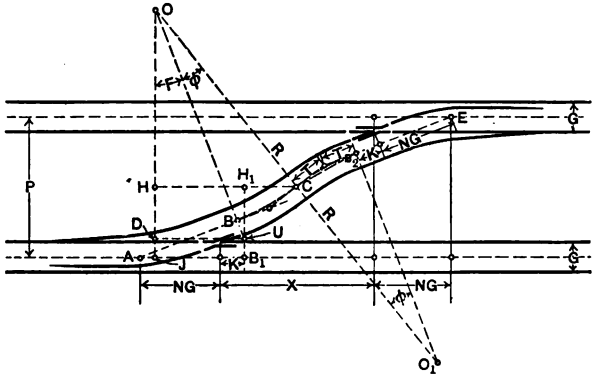

Fig. 18.

Given: N = Number of frogs,
F = Angle of frogs,
K = Distance point to heel of frogs,
c = Spread of frogs at heel,
G = Gage of tracks,
P = Perpendicular distance center to center of parallel tracks,
R = Radius of reverse curve tangent to heels of frogs, equal to the radius of the lead curve for good practice.

Required: ϕ = Angle at center for reverse curve,
x = Distance point to point of frogs measured parallel to the center line of either parallel track,
T = Tangent distance for reverse curve.

From the symmetry of the figure the point of reverse curve will fall midway between the parallel tracks and also midway between the frog points as measured parallel to either parallel track. Let O be the center of the reverse curve. Let B be a point on the center line of the crossover opposite the heel of the frog which is also the P. C. of the curve. Let C

be the P. R. C. of the reverse curve. Draw the radii $\overline{OC}$ and $\overline{OB}$. Extend $\overline{OB}$ to U. Drop a $\perp$ from O upon the center line of the parallel track at J. Drop $\perp$s from C and U upon $\overline{OJ}$ at H and D respectively. Let B_1 be a point on the center line of the parallel track opposite the heel of the frog. Draw $\overline{B_1H_1}$ $\perp$ to $\overline{AB_1}$ and $\parallel$ to $\overline{OJ}$, intersecting OU at U.

$$\measuredangle COB = \phi \text{ and } \measuredangle BOJ = \measuredangle BAB_1 = F.$$

$$\overline{OJ} = \overline{OU} \cdot \cos \measuredangle BOJ + \overline{UB_1} = \left(R + \frac{G+c}{2}\right) \cdot \cos F + \frac{G+c}{2},$$

$$\overline{OH} = \overline{OJ} - \overline{HJ} = \left(R + \frac{G+c}{2}\right) \cdot \cos F + \frac{G+c}{2} - \frac{P}{2},$$

$$\cos \measuredangle COJ = \cos(\measuredangle COB + \measuredangle BOJ) = \frac{\overline{OH}}{\overline{OC}},$$

$$\cos(F+\phi) = \frac{\left(R + \frac{G+c}{2}\right) \cdot \cos F + \frac{G+c}{2} - \frac{P}{2}}{R}. \tag{1}$$

Solve for ϕ.

$$\overline{HC} = \overline{OC} \sin \measuredangle COJ = R \cdot \sin(F+\phi),$$

$$\overline{H_1C} = \overline{HC} - \overline{HH_1} = \overline{HC} - \overline{UD} = \overline{HC} - \overline{OU} \cdot \sin \measuredangle UOJ$$

$$= R \cdot \sin(F+\phi) - \left(R + \frac{G+c}{2}\right) \cdot \sin F,$$

$$x = 2 \cdot (\overline{H_1C} + K) = 2\left[R \cdot \sin(F+\phi) - \left(R + \frac{G+c}{2}\right) \cdot \sin F + K\right]$$

$$= 2 \cdot R \cdot [\sin(F+\phi) - \sin F] - (G+c)\sin F + 2K. \tag{2}$$

$$T = R \cdot \tan\frac{\phi}{2}. \tag{3}$$

The value of x might also be found as follows:

$$x = 2\left\{[(NG+K) \cdot \cos F - NG] + 2 \cdot R \cdot \sin\frac{\phi}{2} \cdot \cos\left(F + \frac{\phi}{2}\right)\right\}$$

$$= 2[(NG+K)\cos F - NG] + 4 \cdot R \cdot \sin\frac{\phi}{2} \cdot \cos\left(F + \frac{\phi}{2}\right)$$

$$= 2(K \cdot \cos F - NG \cdot \text{vers}\, F) + 4 \cdot R \cdot \sin\frac{\phi}{2} \cdot \cos\left(F + \frac{\phi}{2}\right).$$

The value of x may also be found in the following manner, since having found the value of ϕ the value of T may be conveniently taken from the table of the functions of a 1° curve.

$$x = 2\{(NG + K) \cdot \cos F + T[\cos F + \cos(F + \phi)]\} - 2NG$$
$$= 2(K \cdot \cos F - NG \cdot \text{vers } F) + 2T[\cos F + \cos(F + \phi)].$$

Equations (1) and (2) may be written as follows:

$$\cos(F + \phi) = \left[\frac{(2 \cdot R + G + c) \cdot \cos F + G + c}{2R}\right] - \left(P \times \frac{1}{2R}\right), \quad (1)$$

$$x = 2 \cdot R \cdot \sin(F + \phi) - [(2 \cdot R + G + c) \cdot \sin F - 2K], \quad (2)$$

from which it is noted that the expressions within the brackets are constant for any given frog and radius. Therefore having obtained $\cos(F + \phi)$ and x for any value of P for any given frog and radius, for any other value of P, say P_1,

$$\cos(F + \phi_1) = \cos(F + \phi) - (P_1 - P)\frac{1}{2R},$$
$$x_1 = x + 2 \cdot R \cdot [\sin(F + \phi_1) - \sin(F + \phi)],$$

proper attention being given to the algebraic sign.

Problem 21.

To locate the frog points for a crossover between parallel tracks, using frogs of different number and reverse curve of different radii tangent to the heels of the frogs.

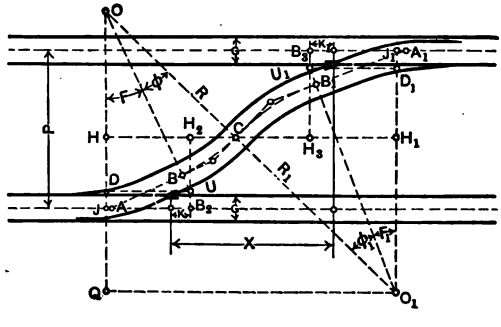

Fig. 19.

Given: N and N_1 = Frog numbers.
F and F_1 = Frog angles, $(F > F_1)$
K and K_1 = Distance from point to heel of frogs,
c and c_1 = Spread at heel of frogs,
R and R_1 = Radii of reverse curve tangent to heels of frogs,

G = Gage of tracks,
P = Perpendicular distance center to center of parallel tracks.

Required: ϕ and ϕ_1 = Center angle of reverse curve tangent to heels of frogs,
T and T_1 = Tangent distances to reverse curve,
x = Distance point to point of frogs measured parallel to the center line of either of the parallel tracks.

Let B_3A_1 and JB_2 be points on the center line of the given parallel tracks. Let BCB_1 be points on the center line of the reverse curve. B is opposite the heel of frog F, C is the P. R. C. of the reverse curve and B_1 is opposite the heel of frog F_1. $\overline{AB}$ and $\overline{B_1A_1}$ are center lines $\parallel$ to the point rails of the frogs and intersect the center lines of the parallel tracks JB_2 and B_3A_1 at A and A_1.

Let O and O_1 be the centers of the reverse curve. Draw the radii $\overline{OB}$ and $\overline{O_1B_1}$. Draw $\overline{OO_1}$ through C. Extend $\overline{OB}$ to U and $\overline{O_1B_1}$ to U_1.

Let B_2 and B_3 be points on the center lines of the parallel tracks opposite the heels of the frogs. Draw $\overline{B_2H_2}$ and $\overline{B_3H_3}$ $\perp$ to JB_2 and B_3A and intersecting $\overline{OU}$ and $\overline{O_1U_1}$ at U and U_1. Draw $\overline{OJ}$ and $\overline{O_1J_1}$ $\perp$ to JB_2 and B_3A at J and J_1. Extend $\overline{OJ}$ to Q. Draw $\overline{O_1Q}$ $\parallel$ to JB_2 and B_3A. Through C draw $\overline{HH_1}$ $\perp$ to $\overline{OQ}$ and $\overline{O_1J_1}$ at H and H_1 and intersecting $\overline{B_2H_2}$ and $\overline{B_3H_3}$ at H_2 and H_3. Draw $\overline{UD}$ and $\overline{U_1D_1}$ $\perp$ to $\overline{OJ}$ and $\overline{O_1J_1}$ at D and D_1. $\measuredangle UOQ = F$, $\measuredangle COU = \phi$, $\measuredangle U_1O_1J_1 = F_1$ and $\measuredangle CO_1U_1 = \phi_1$.

$$\begin{aligned}
\overline{OQ} &= \overline{OJ} + \overline{O_1J_1} - P \\
&= \overline{OD} + \overline{DJ} + \overline{O_1D_1} + \overline{D_1J_1} - P \\
&= \overline{OD} + \overline{UB_2} + \overline{O_1D_1} + \overline{U_1B_3} - P \\
&= \overline{OU} \cdot \cos \measuredangle UOQ + \overline{UB_2} + \overline{O_1U_1} \cdot \cos \measuredangle U_1O_1J_1 + \overline{U_1B_3} - P \\
&= \left(R + \frac{G+c}{2}\right) \cdot \cos F + \frac{G+c}{2} + \left(R_1 + \frac{G+c}{2}\right) \cdot \cos F_1 \\
&\quad + \frac{G+c_1}{2} - P.
\end{aligned}$$

$$\measuredangle QOO_1 = \measuredangle OO_1J_1 = (F + \phi) = (F_1 + \phi_1).$$

$$\cos(F+\phi) = \cos(F_1+\phi_1) = \frac{\overline{OQ}}{\overline{OO_1}} =$$

$$\frac{(2\cdot R+G+c)\cdot\cos F+(2\cdot R_1+G+c_1)\cdot\cos F_1+2G+c+c_1-2P}{R+R_1} \tag{1}$$

Solve for ϕ and ϕ_1.

$$\overline{HH_1} = \overline{QO_1} = \overline{OO_1}\cdot\sin\measuredangle QOO_1 = (R+R_1)\cdot\sin(F+\phi).$$

$$\overline{HH_2} = \overline{DU} = \overline{OU}\cdot\sin\measuredangle UOQ = \left(R+\frac{G+c}{2}\right)\cdot\sin F.$$

$$\overline{H_3H_1} = \overline{U_1D_1} = \overline{O_1U_1}\cdot\sin\measuredangle U_1O_1J_1 = \left(R_1+\frac{G+c_1}{2}\right)\cdot\sin F_1.$$

$$\overline{H_2H_3} = \overline{HH_1} - \overline{HH_2} - \overline{H_3H_1}$$

$$= (R+R_1)\cdot\sin(F+\phi) - \left(R+\frac{G+c}{2}\right)\cdot\sin F - \left(R_1+\frac{G+c_1}{2}\right)\cdot\sin F_1.$$

$$x = \overline{H_2H_3} + K + K_1$$

$$= (R+R_1)\cdot\sin(F+\phi) - \left[\left(R+\frac{G+c}{2}\right)\cdot\sin F + \left(R_1+\frac{G+c_1}{2}\right)\cdot\sin F_1 - (K+K_1)\right]. \tag{2}$$

Or the value of x may be written from the figure as follows:

$$x = \left[(NG+K)\cos F + 2\cdot R\cdot\sin\frac{\phi}{2}\cdot\cos\left(F+\frac{\phi}{2}\right) + 2\cdot R_1\cdot\sin\frac{\phi_1}{2}\cos\left(F_1+\frac{\phi_1}{2}\right) + (N_1G+K_1)\cdot\cos F_1\right] - (NG+N_1G).$$

$$T = R\cdot\tan\frac{\phi}{2}. \tag{3}$$

$$T_1 = R_1\tan\frac{\phi_1}{2}. \tag{4}$$

x may again be shown to be

$$x = [(NG+K+T)\cdot\cos F + (T+T_1)\cdot\cos(F+\phi) + (N_1G+K_1+T_1)\cdot\cos F_1] - (NG+N_1G).$$

As in the preceding problem, from equations (1) and (2) above it may be shown that having solved $\cos(F+\phi)$ and x for any value of P for any two given frogs and radii, for any other value of P, say P_2,

$$\cos(F+\phi_2) = \cos(F+\phi) - \left[(P_2-P)\frac{1}{R+R_1}\right].$$

$$x_2 = x + (R+R_1)\cdot[\sin(F+\phi_2) - \sin(F+\phi)].$$

CHAPTER IV

Connecting Tracks

Problem 22.

To locate the frog points for a connecting track between two diverging straight tracks, using frogs of different number and reverse curve of different radii tangent to the heels of the frogs.

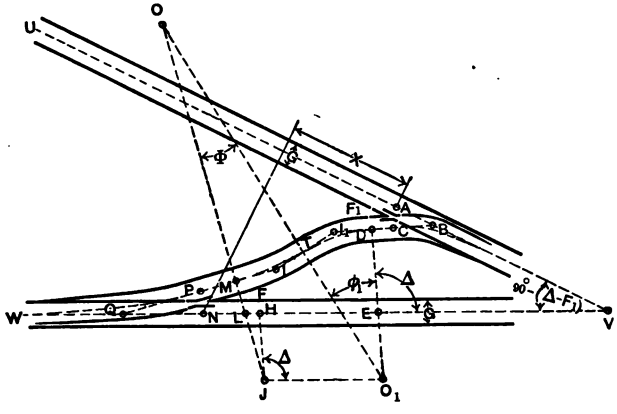

Fig. 20.

Given: The center lines of the two diverging tracks UV and VW that extended intersect at V and the location of the point of the frog in UV which is fixed,

A = Point on center line of UV opposite point of frog F_1,

N_1 = Number of frog at A,

F_1 = Angle of frog at A,

K_1 = Distance point to heel of frog at A,

c_1 = Spread at heel of frog at A,

R_1 = Radius of center line of curve tangent to heel of frog at A,

N = Number of frog in VW,
F = Angle of frog in VW,
K = Distance point to heel of frog in VW,
c = Spread at heel of frog in VW,
R = Radius of center line of curve tangent to heel of frog in VW,
G = Gage of tracks.

Obtain in the field: $\overline{DE}$ = distance $\perp$ to the line of frog F_1 from D on the center line of the connecting track opposite the heel of frog F_1 to the point E on the center line of VW.

$\Delta = \measuredangle DEV$.

Required: ϕ and ϕ_1 = The center angles of the reverse curve tangent to the heels of the frogs,
T and T_1 = The tangent distances to the reverse curve,
x = The distance measured on the center line of UV from A to a point on the center line of UV, a perpendicular from which will pass through N, a point on the center line of VW opposite the point of frog F.

Procedure: From A towards V measure $\overline{AB} = N_1G$. From B measure $(\overline{BC} + \overline{CD}) = (N_1G + K_1)$, making the angle $ABD = F_1$ with UV. From D measure $\overline{DE} \perp$ to $\overline{BD}$ and intersecting VW at E. Measure $\measuredangle DEV = \Delta$.

Extend $\overline{DE}$ to O_1, making $\overline{DO_1} = R_1$. From O_1 through T, the point of reverse curve, draw $\overline{O_1O} = \overline{O_1T} + \overline{TO} = (R_1 + R)$. Let P and N be points on the center line of the connecting track and VW respectively, opposite the point of frog F. Let $\measuredangle NQP = F$, $\overline{QP} = \overline{QN} = NG$, $\overline{PM} = K$. Draw $\overline{O_1J} \parallel$ to VW. Draw $\overline{OM} \perp$ to $\overline{QM}$ at M and $= R$. Extend $\overline{OM}$ to intersect VW at L and $\overline{O_1J}$ at J. Draw $\overline{JH} \parallel$ to $\overline{O_1E}$. Then $\overline{JH} = \overline{O_1E}$.

$$\measuredangle OJO_1 = (90° + F),$$
$$\measuredangle HLJ = \measuredangle QLM = (90° - F),$$
$$\measuredangle LHJ = \measuredangle HJO_1 = \measuredangle HEO_1 = \measuredangle DEV = \Delta.$$
$$\overline{LJ} : \overline{HJ} :: \sin \measuredangle LHJ : \sin \measuredangle HLJ.$$
$$\overline{LJ} = \frac{(R_1 - \overline{DE}) \sin \Delta}{\sin (90° - F)} = \frac{(R_1 - \overline{DE}) \sin \Delta}{\cos F}.$$

$$\overline{ML} = (\overline{QP} + \overline{PM}) \cdot \tan \measuredangle NQP = (NG + K) \cdot \tan F.$$

$$\overline{OJ} = \overline{OM} + \overline{ML} + \overline{LJ}$$

$$= R + (NG + K) \cdot \tan F + \frac{(R_1 - DE) \cdot \sin \Delta}{\cos F}.$$

$$\sin \measuredangle OO_1J : \sin \measuredangle OJO_1 :: \overline{OJ} : \overline{OO_1}.$$

$$\measuredangle OO_1J = 90° - (F + \phi).$$

$$\cos (F + \phi)$$

$$= \frac{[R \cdot \cos F + (NG + K) \sin F + (R_1 - \overline{DE}) \sin \Delta] \cdot \sin (90° + F)}{(R + R_1) \cos F}$$

$$= \frac{R \cdot \cos F + (NG + K) \sin F + (R_1 - \overline{DE}) \sin \Delta}{R + R_1}. \tag{1}$$

$$= \frac{(2 \cdot R + G + c) \cdot \cos F + G + c + 2 (R_1 - \overline{DE}) \cdot \sin \Delta}{2 (R + R_1)}.$$

Solve for $(F + \phi)$.

$$\phi = (F + \phi) - F. \tag{2}$$

$$\phi_1 = 90° + F + \phi - \Delta. \tag{3}$$

$$T = R \cdot \tan \frac{\phi}{2}. \tag{4}$$

$$T_1 = R_1 \cdot \tan \frac{\phi_1}{2}. \tag{5}$$

$x =$ Projection of $(\overline{BI_1} + \overline{I_1I} + \overline{IQ})$ on $UV - (\overline{AB} +$ the projection of $\overline{NQ}$ on $UV)$.

$$\therefore\ x = [\overline{BI_1} \cdot \cos \measuredangle ABI_1 + \overline{I_1I} \cdot \cos (\measuredangle ABI_1 + \measuredangle DO_1O) + \overline{IQ} \cdot \cos (\measuredangle ABI_1 + \measuredangle DO_1O - \measuredangle MOT)] - [\overline{AB} + \overline{NQ} \cdot \cos \measuredangle UVW].$$

$$x = [(N_1G + K_1 + T_1) \cos F_1 + (T_1 + T) \cdot \cos (F_1 + \phi_1) + (NG + K + T) \cdot \cos (F_1 + \phi_1 - \phi)] - \{N_1G + NG \cdot \cos [90° - (\Delta - F_1)]\}.$$

$$x = [(N_1G + K_1 + T_1) \cdot \cos F_1 + (T_1 + T) \cdot \cos (F_1 + \phi_1) + (NG + K + T) \cdot \cos (F_1 + \phi_1 - \phi)] - [N_1G + NG \cdot \sin (\Delta - F_1)]. \tag{6}$$

If for physical reasons it is impossible to measure $\overline{DE}$ in the field or less convenient than to measure the distance $\overline{BV}$, then the distance $\overline{BV}$ and the angle UVW may be measured and $\overline{DE}$ calculated. Thus in Fig. 20, with $\overline{BV}$ and $\measuredangle UVW$ known, drop a $\perp$ from B upon VW at B_1. Drop a $\perp$ from D upon VW at E_1. From B draw $\overline{BD_1} \parallel$ to VW. Extend $\overline{E_1D}$ to intersect $\overline{BD_1}$ at D_1; then

$$\overline{BB_1} = \overline{D_1D} + \overline{DE_1} \text{ and } \measuredangle E_1DE = \measuredangle D_1BD = (\Delta - 90).$$

$$\Delta = 90 + F_1 - \measuredangle UVW.$$

$$\overline{D_1D} = \overline{BD} \cdot \sin \measuredangle D_1BD$$

$$= (N_1G + K_1) \sin (\Delta - 90) = -(N_1G + K_1) \cos \Delta.$$

$$\overline{BB_1} = \overline{BV} \cdot \sin UVW$$

$$= \overline{BV} \cdot \sin [90 - (\Delta - F_1)] = \overline{BV} \cdot \cos (\Delta - F_1).$$

$$\overline{DE_1} = \overline{BB_1} - \overline{D_1D} = \overline{BV} \cdot \cos (\Delta - F_1) + (N_1G + K_1) \cos \Delta.$$

$$\overline{DE} = \frac{\overline{DE_1}}{\cos \measuredangle E_1DE} = \frac{\overline{DE_1}}{\cos (\Delta - 90)}$$

$$= \frac{\overline{BV} \cdot \cos (\Delta - F_1) + (N_1G + K_1) \cos \Delta}{\sin \Delta}. \tag{7}$$

Under the conditions of the problem

$$\measuredangle UVW = [90° - (\Delta - F_1)] > 0,$$

therefore Δ must be less than $(90 + F_1)$. Therefore the value of $\overline{DE}$ given above is true for all values of Δ, since $\cos (\Delta - F_1)$ and $\sin \Delta$ are always positive $(+)$ and since $\cos \Delta$ will be negative $(-)$ when Δ is greater, and positive $(+)$ when Δ is less than 90.

When $\Delta = 90°$ angle $UVW = F_1$ and BD is $\parallel$ to VW, in which case the problem may be solved as shown above; or, if $\overline{DE}$, which is $\perp$ now to VW, is small, say 13 to 16, or 18 feet, or even more if economy of space is not essential, a simple curve tangent to the heel of frog F_1 in UV and to the line produced of frog F, in VW, may be used.

In this case extend $\overline{BD}$ to I_1, making $\overline{DI_1} = T_1 = R_1 \cdot \tan \frac{F}{2}$. At I_1 turn $\measuredangle F$ towards VW and obtain the point of intersection of this line and VW. From this intersection measure NG towards V, which will properly locate the point of frog F in VW.

To find an expression for x under the above assumption. Let T_{BF} = Tangent adjacent or back of frog F and between the heel of frog F and the P. T. of the connecting curve, then

$$\overline{DE} = (NG + K + T_{BF} + T_1) \sin F,$$

$$T_{BF} = \frac{\overline{DE}}{\sin F} - (NG + K + T_1),$$

$$\begin{aligned} x = {} & (N_1G + K_1 + T_1) \cos F_1 \\ & + (NG + K + T_{BF} + T_1) \cdot \cos (F + F_1) \\ & - (N_1G + NG \cdot \cos F_1) \end{aligned}$$

$$= (N_1G + K_1 + T_1 - NG) \cos F_1 + \overline{DE} \frac{\cos (F + F_1)}{\sin F} - N_1G.$$

When F_1 is $> F$ and $\Delta = (90 + F)$ then $\measuredangle UVW = (F_1 - F)$ and $\overline{BD}$ is $\parallel$ to $\overline{QM}$, and, as before, when $\overline{DE}$ is small the track between the heels of the frogs may be made straight. In this case simply extend $\overline{BD}$ to an intersection with VW and measure from this intersection towards V the distance NG, which will give the proper location for the frog point F in VW.

To find x in this case,

$$x = (\overline{DE} \cdot \cot F + N_1G + K_1) \cdot \cos F_1 - [N_1G + NG \cdot \cos (F_1 - F)].$$

Problem 23.

To locate the frog points for a connecting track between two converging straight tracks, using frogs of different number and reverse curve of different radii tangent to the heels of the frogs.

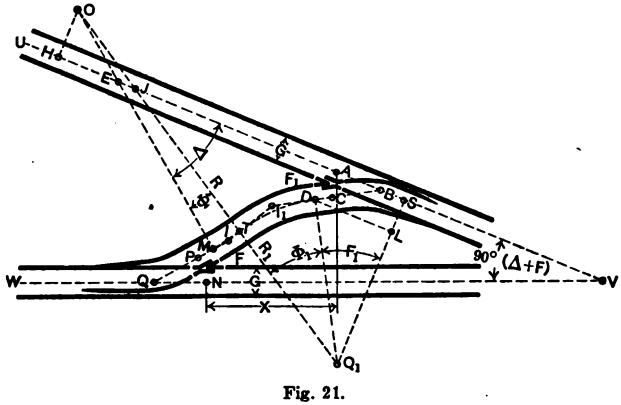

Fig. 21.

Given: The center lines of the two converging tracks UV and WV that extended intersect at V and the location of the point of the frog F in WV, which is fixed,

"N" = a point on the center line of WV opposite the point of frog F,

N = Number of frog F in WV,

F = Angle of frog in WV,

K = Distance from point to heel of frog F,
c = Spread at the heel of frog F,
R = Radius of center line of curve tangent to the heel of frog F.
N_1 = Number of frog F_1 in UV,
F_1 = Angle of frog in UV,
K_1 = Distance from point to heel of frog F_1,
c_1 = Spread at heel of frog F_1,
R_1 = Radius of curve tangent to the heel of the frog F_1,
G = Gage of track.

Obtain in the field: $\overline{ME}$ = Distance $\perp$ to the line of frog F from M on the center line of the connecting track opposite the heel of frog F to the point E on the center line of UV.
$\Delta = \measuredangle MEV$.

Required:

ϕ and ϕ_1 = Center angles of reverse curve,
T and T_1 = The tangent distances to the reverse curve,
x = The distance to measure on the center line of WV, from the point "N" opposite the point of frog F to a point on the center of WV a perpendicular from which will pass through A a point on the center line of UV opposite the point of frog F_1.

Procedure: From N towards W measure $\overline{NQ} = NG$. From Q measure $\overline{QM} = (\overline{QP} + \overline{PM}) = (NG + K)$, making the $\measuredangle NQM = F$ with WV. From M measure $\overline{ME} \perp$ to $\overline{QM}$ and intersecting UV at E. Measure $\measuredangle MEV = \measuredangle HEO = \Delta$. Extend $\overline{ME}$ to O, making $\overline{MO} = R$. From O draw $\overline{OH} \perp$ to UV at H. From O through T, the point of reverse curve, draw $\overline{OO_1} = (\overline{OJ} + \overline{JT} + \overline{TO_1}) = (R + R_1)$. Let A be a point on the center line of UV and C a point on the center line of the connecting track opposite the point of frog F_1 in UV. Let angle $ABD = F_1$. From O_1 draw $\overline{O_1D} \perp$ to $\overline{BD}$ and $= R_1$. From O_1 draw $\overline{O_1S} \perp$ to UV at S and from D draw $\overline{DL} \perp$ to $\overline{O_1S}$ at L. Let $\overline{II_1} = \overline{IT} + \overline{TI_1}$ = common tangent to reverse curve. Extend $\overline{QM}$ to I and $\overline{BD}$ to I_1. Then $\overline{MI} = \overline{IT} = T$ and $\overline{TI_1} = \overline{I_1D} = T_1$ = tangent distances to reverse curve. $\measuredangle MOT = \phi$, $\measuredangle DO_1T = \phi_1$, $\measuredangle UVW = [90° - (\Delta + F)]$, $\measuredangle DO_1S = F_1$.

$$\overline{OH} = (\overline{MO} - \overline{ME}) \cdot \sin \measuredangle HEO = (R - \overline{ME}) \cdot \sin \Delta,$$

$$\overline{O_1S} = (\overline{O_1L} + \overline{LS}) = \overline{O_1D} \cdot \cos \measuredangle DOS + \overline{BD} \cdot \sin ABD$$

$$= R_1 \cdot \cos F_1 + (N_1G + K_1) \cdot \sin F_1,$$

$$\cos \measuredangle JO_1S = \frac{\overline{O_1S} + \overline{HO}}{\overline{O_1J} + \overline{JO}},$$

$$\cos (F_1 + \phi_1) = \frac{R_1 \cdot \cos F_1 + (N_1G + K_1) \cdot \sin F_1 + (R - \overline{ME}) \cdot \sin \Delta}{R + R_1} \tag{1}$$

$$= \frac{(2 \cdot R_1 + G + c_1) \cdot \cos F_1 + G + c_1 + 2(R - \overline{ME}) \cdot \sin \Delta}{2\,(R + R_1)}.$$

Solve for $(F_1 + \phi_1)$.

$$\phi_1 = (F_1 + \phi_1) - F_1. \tag{2}$$

$$\measuredangle HOE + \measuredangle EOJ = (90° - \Delta) + \phi = (F_1 + \phi_1),$$

$$\therefore \quad \phi = (F_1 + \phi_1 + \Delta) - 90°. \tag{3}$$

$$T = R \cdot \tan \frac{\phi}{2}. \tag{4}$$

$$T_1 = R_1 \cdot \tan \frac{\phi_1}{2}. \tag{5}$$

x = The projection of $(\overline{QI} + \overline{II_1} + \overline{I_1B})$ on WV minus $(\overline{QN}$ + the projection of $\overline{AB}$ on $WV)$.

$$x = \overline{QI} \cdot \cos \measuredangle NQM + \overline{II_1} \cdot \cos (\measuredangle NQM + \measuredangle MOT)$$
$$+ \overline{I_1B} \cdot \cos (\measuredangle NQM + \measuredangle MOT - \measuredangle TO_1D)$$
$$- (\overline{QN} + \overline{AB} \cdot \cos \measuredangle UVW),$$

$$x = (NG + K + T) \cdot \cos F + (T + T_1) \cdot \cos (F + \phi)$$
$$+ (N_1G + K_1 + T_1 \cdot \cos (F + \phi - \phi_1)$$
$$- \{NG + N_1G \cdot \cos [90° - (\Delta + F)]\},$$

$$x = (NG + K + T) \cdot \cos F + (T + T_1) \cdot \cos (F + \phi)$$
$$+ (N_1G + K_1 + T_1) \cdot \cos (F + \phi - \phi_1)$$
$$- [NG + N_1G \cdot \sin (\Delta + F)]. \tag{6}$$

If for physical reasons it is impossible to measure $\overline{ME}$ in the field or if it is less convenient to measure $\overline{ME}$ than the distance $\overline{NV}$ and the angle UVW, $\overline{NV}$ and $\measuredangle UVW$ may be measured and $\overline{ME}$ and Δ may be calculated. Thus, with $\overline{NV}$ and $\measuredangle UVW$ known $\overline{QV} = (\overline{NV} + NG)$ is known, and since $\measuredangle UVW = 90 - (\Delta + F)$, $\therefore \Delta = 90 - (\measuredangle UVW + F)$ and is

also known. The $\perp$ distance from Q to $UV = \overline{QV} \cdot \sin \measuredangle UVW$. The projection of $\overline{QM}$ on this $\perp = \overline{QM} \cdot \sin(\measuredangle UVW + \measuredangle NQM)$. Then $\overline{QV} \cdot \sin \measuredangle UVW - \overline{QM} \cdot \sin(\measuredangle UVW + \measuredangle NQM) = \perp$ distance from M to UV, and this $\perp \div \sin \measuredangle MEV = \overline{ME}$. $\therefore$

$$\overline{ME} = \frac{\overline{QV} \cdot \sin \measuredangle UVW - \overline{QM} \cdot \sin(\measuredangle UVW + \measuredangle NQM)}{\sin \measuredangle MEV},$$

$$\overline{ME} = \frac{\overline{QV} \cdot \sin[90 - (\Delta + F)] - (NG + K) \cdot \sin(90 - \Delta)}{\sin \Delta},$$

$$\overline{ME} = \frac{\overline{QV} \cdot \cos(\Delta + F) - (NG + K) \cdot \cos \Delta}{\sin \Delta}. \qquad (7)$$

Solve for $\overline{ME}$ and proceed as outlined above.

Under the conditions of the problem $\measuredangle UVW = [90° - (\Delta + F)] > 0$. $\therefore$ maximum Δ must be less than $(90 - F)$. $\therefore$ equation (7) is true for all values of Δ.

When $\Delta = 90° - (F + F_1)$, then $\measuredangle UVW = F_1$ and $\overline{BD}$ is parallel to $\overline{WV}$. In which case the problem may be solved as outlined above in equations (1) to (7) or by the use of a simple curve tangent to the heel of frog F_1 and to the line of frog F produced. Thus the point N being fixed, measure $\overline{NQ} = NG$ on WV toward W. From Q turn the $\measuredangle NQM = F$, giving the line of $\overline{QM}$. Extend QM to intersect UV. Set up over this point of intersection. Sight on U and read the angle between U and Q; this should equal $(F + F_1)$. Locate the point of frog F_1 by equation (1), Problem 14, where Δ and F of Problem 14 are equal to $(F + F_1)$ and F_1 respectively.

Or to determine x as required in Problem 23. Assuming $\overline{ME}$ known either by measurement or calculation,

$$\Delta = 90 - (F + F_1), \quad \measuredangle UVW = F_1, \text{ and } T_1 = R_1 \cdot \tan \frac{F}{2},$$

$$\overline{ME} \cdot \sin \Delta = (T_{BF} + T_1) \cdot \sin(F + F_1) + (N_1G + K_1 + T_1) \cdot \sin F_1,$$

$$T_{BF} = \frac{\overline{ME} \cdot \cos(F + F_1) - (N_1G + K_1 + T_1) \cdot \sin F_1}{\sin(F + F_1)} - T_1$$

$$= \overline{ME} \cdot \tan \Delta - \frac{(N_1G + K_1 + T_1) \cdot \sin F_1}{\cos \Delta} - T_1,$$

$$x = (NG + K + T_{BF} + T_1) \cdot \cos F + (N_1G + K_1 + T_1) - (NG + N_1G \cdot \cos F_1).$$

When it is impossible or inconvenient to measure $\overline{ME}$, then x may be determined as follows.

$$\overline{QV} \cdot \sin F_1 = (NG + K + T_{BF} + T_1) \cdot \sin (F + F_1) + (N_1G + K_1 + T_1) \cdot \sin F_1,$$

$$T_{BF} = \frac{[\overline{QV} - (N_1G + K_1 + T_1)] \cdot \sin F_1}{\sin (F + F_1)} - (NG + K + T_1),$$

$$x = (NG + K + T_{BF} + T_1) \cdot \cos F + (N_1G + K_1 + T_1) - (NG + N_1G \cdot \cos F_1)$$

$$= \frac{[\overline{QV} - (N_1G + K_1 + T_1)] \sin F_1 \cos F}{\sin (F + F_1)} + (N_1G + K_1 + T_1) - (NG + N_1G \cdot \cos F_1).$$

Again when $F_1 > F$ and $\Delta = (90° - F_1)$ then $\measuredangle UVW = (F_1 - F)$ and $\overline{BD}$ is $\parallel$ to $\overline{QM}$. This case may be solved by Problem 23, or if economy of space does not prevent, the track between the heels of the frogs may be made straight. Thus with the point "N" fixed, measure the distance $\overline{NQ} = NG$ towards W on the center line of WV. Set up at Q, turn $\measuredangle NQM = F$, which gives the line $\overline{QM}$. Extend $\overline{QM}$ to intersect UV. Measure on the center line of UV from this point of intersection in the direction of U the distance N_1G to the point A, which locates the point of frog F_1 in UV, or

$$x = [(NG + K) + \overline{ME} \cdot \tan \Delta] \cos F - [NG + N_1G \cdot \cos (F_1 - F)],$$

$$x = \frac{\overline{QV} \cdot \sin (F_1 - F)}{\sin F_1} \cos F - [NG + N_1G \cdot \cos (F_1 - F)].$$

In general, Problem 22 may be solved by the use of a figure similar to that of Problem 23 or vice versa. Problems 22 and 23 are used only where economy of space is necessary. Where space will permit, it would seem best practice: First, with point A fixed, to measure $\measuredangle UVW$ in any manner most convenient, then to run in sufficient curve tangent to the heel of frog F_1 so that the tangent to the curve will make $\measuredangle F$ with WV. Extend the tangent to intersect WV, measure on the center line of WV towards V the distance NG, which will locate the point N.

Second, with the point N fixed, extend the line of frog F to intersect UV, measure the angle of intersection and locate the point A by equation (1), Problem 14.

Problem 24.

To locate the frog points for a connecting track between two intersecting straight tracks, using frogs of different number and a simple curve tangent to the heels of the frogs.

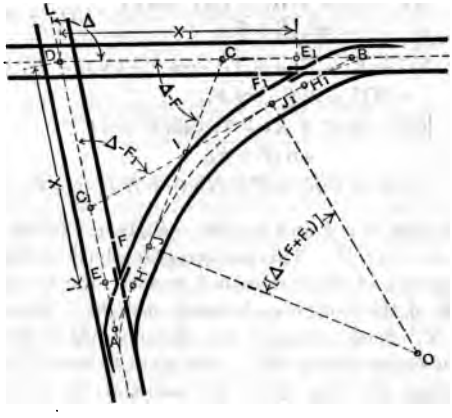

Fig. 22.

Given: $\overline{AD}$ and $\overline{BD}$, the center lines of the two intersecting straight tracks, intersecting at D,

N and N_1 = Frog numbers,
F and F_1 = Frog angles,
K and K_1 = Distance point to heel of frogs,
R = Radius of curve tangent to heel of frogs,
G = Gage of tracks.

Measure in the field

$$\Delta = \measuredangle LDB.$$

Required:

$$\left.\begin{array}{l} x = \overline{DE} \\ x_1 = \overline{DE_1} \end{array}\right\} \text{Distance from point of intersection of center lines of given tracks to points on the respective center lines opposite points of frogs.}$$

Let E and E_1 = points on center lines of given tracks opposite points of frogs. Measure $\overline{EA} = NG$ and $\overline{E_1B} = N_1G$. From A lay off $\overline{AC}$, making $\measuredangle C_1AC = F$ and intersecting $\overline{BD}$ at C. From B lay off $\overline{BC_1}$ intersecting $\overline{AD}$ at C_1 and

making $\measuredangle CBC_1 = F_1$. Let $\overline{AC}$ and $\overline{BC_1}$ intersect at I so that $\overline{AI} - \overline{AJ} = \overline{BI} - \overline{BJ_1}$ = tangent distance for connecting curve. Let $\measuredangle LDB = \Delta$, $\measuredangle DCI = (\Delta - F)$, $\measuredangle DC_1I = (\Delta - F_1)$ and $\measuredangle CIB = \measuredangle JOJ_1 = [\Delta - (F + F_1)]$ = center angle of curve. $\overline{AH} = NG$, $\overline{HJ} = K$, $\overline{J_1H_1} = K_1$ and $\overline{H_1B} = N_1G$.

$$T = \overline{J_1I} = \overline{JI} = R \cdot \tan \frac{[\Delta - (F + F_1)]}{2}. \tag{1}$$

$$\overline{IC} : \overline{BI} :: \sin \measuredangle CBI : \sin \measuredangle BCI.$$

$$\overline{IC} = \frac{(\overline{BH_1} + \overline{H_1J_1} + J_1I) \sin CBI}{\sin \measuredangle DCI} = \frac{(N_1G + K_1 + T) \sin F_1}{\sin (\Delta - F)}.$$

$$\overline{AD} : \overline{AC} :: \sin \measuredangle DCI : \sin \measuredangle CDA.$$

$$\overline{DE} + \overline{EA} = \frac{(\overline{AH} + \overline{HJ} + \overline{JI} + \overline{IC}) \sin \measuredangle DCI}{\sin \measuredangle CDA}.$$

$$x + NG = \frac{\left[(NG + K + T) + \dfrac{(N_1G + K_1 + T) \sin F_1}{\sin (\Delta - F)}\right] \sin (\Delta - F)}{\sin \Delta}.$$

$$x = \frac{(NG + K + T) \cdot \sin (\Delta - F) + (N_1G + K_1 + T) \cdot \sin F_1}{\sin \Delta} - NG. \tag{2}$$

Similarly

$$x_1 = \frac{(N_1G + K_1 + T) \cdot \sin (\Delta - F_1) + (NG + K + T) \cdot \sin F}{\sin \Delta} - N_1G. \tag{3}$$

When $N = N_1$, $F = F_1$, and $K = K_1$, then

$$T = R \cdot \tan \frac{\Delta - 2F}{2}. \tag{1}$$

$$x = x_1 = \frac{(NG + K + T)[\sin (\Delta - F) + \sin F]}{\sin \Delta} - NG$$

$$= \frac{(NG + K + T) \cos \frac{1}{2} (\Delta - 2F)}{\cos \frac{\Delta}{2}} - NG. \tag{2}$$

Problem 25.

To locate the frog points for a connecting track between the outside of a curved track and any intersecting straight track,

using frogs of different number and simple curve tangent to the heels of the frogs.

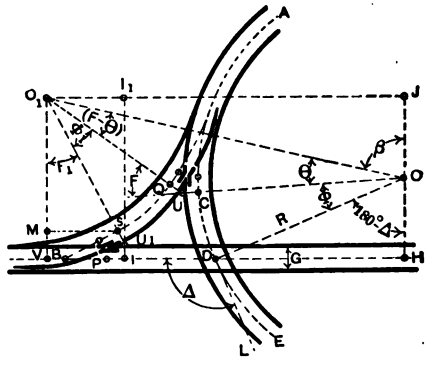

Fig. 23.

Given: ACE and VH, the center lines of the given tracks, intersecting at D,

N and N_1 = Frog numbers,

F and F_1 = Frog angles,

K and K_1 = Distance point to heel of frogs,

c and c_1 = Spread of frogs at heel,

R = Radius of given curved track,

R_1 = Radius of connecting track tangent to heels of frogs,

G = Gage of tracks.

Measure in the field,

$\Delta = \measuredangle LDV$.

Required:

ϕ = Center angle of given curved track between point of intersection D and heel of frog F at C.

ϕ_1 = Center angle of connecting track curve tangent to heels of frogs,

T_1 = Tangent distance for connecting curve,

$\overline{DC}$ = Chord of given curve between D and C, the heel of frog F,

$x = \overline{DC} + K$ = Distance from D to point of frog E,

$\overline{DP}$ = Distance from D on center line of given straight track to point of frog F_1.

Let A, C, D, E represent points on the center line of given curved track and let V, B, P, I, D, H be points on the center line of the given straight track. $D =$ point of intersection. $DL =$ tangent to center line of given curved track at point of intersection. $\measuredangle LDV = \Delta$.

Let O = Center of given curved track. Through O draw $\overline{JH} \perp$ to VH at H. Let C be point on center line opposite the heel of frog F. From O draw $\overline{OD} = \overline{OC} = R$. $\measuredangle COD = \phi$, $\measuredangle DOH = (180 - \Delta)$. Let O_1 be the center of the connecting curve. From O_1 draw $\overline{O_1J} \perp$ to VH and intersecting $\overline{JH}$ at J. Join OO_1. Let $\measuredangle O_1OJ = \beta$. Let Q and S be points on the center line of the connecting curve opposite the heels of the frogs F and F_1 respectively. Q and S are therefore the P. C. and P. T. of the connecting curve. From O_1 draw $\overline{O_1Q} = O_1S = R_1$. Extend $\overline{OC}$ and $\overline{O_1Q}$ to intersect at U. $\overline{OU}$ and $\overline{O_1U}$ are $\perp$ to the heel of frog F and $\overline{CU} = \overline{QU} = \frac{G}{2} + \frac{c}{2\cos\frac{F}{2}}$. Let I be a point on the center line of the given straight track opposite the heel of frog F_1. Draw $\overline{II_1} \perp$ to $\overline{VH}$ and $\overline{O_1J}$ and intersecting $\overline{O_1J}$ at I_1. Extend $\overline{O_1S}$ to intersect $\overline{II_1}$ at U_1. $\overline{O_1U_1}$ and $\overline{II_1}$ are $\perp$ to the heel of frog F_1 and $\overline{SU_1} = \overline{IU_1} = \frac{G}{2} + \frac{c_1}{2\cos\frac{F}{2}}$. From O_1 draw $\overline{O_1V} \perp$ to $\overline{VH}$ at V and $\parallel$ to II_1. From S draw $\overline{SM} \parallel$ to $\overline{VH}$ and $\perp$ to $\overline{O_1V}$ at M. Call $\measuredangle O_1OU = \theta$; then $\measuredangle OO_1U = (F - \theta)$, $\measuredangle QO_1S = \phi_1$, $\measuredangle IBS = SO_1V = I_1U_1O_1 = F_1$. P = point on center line of VH opposite point of frog F_1. $\overline{PI} = K_1$.

$$\frac{G}{2} + \frac{c}{2\cos\frac{F}{2}} \text{ and } \frac{G}{2} + \frac{c_1}{2\cos\frac{F_1}{2}}$$

may be written without appreciable error $\frac{G+c}{2}$ and $\frac{G+c_1}{2}$.

$$\frac{\overline{OU} + \overline{O_1U}}{\overline{OU} - \overline{O_1U}} = \frac{\tan\frac{1}{2}(\measuredangle UO_1O + \measuredangle UOO_1)}{\tan\frac{1}{2}(\measuredangle UO_1O - \measuredangle UOO_1)}.$$

$$\therefore \quad \tan\tfrac{1}{2}(F - 2\theta) = \frac{R - R_1}{R + R_1 + G + c}\tan\frac{F}{2} \qquad (1)$$

Solve for θ.

$$\overline{OO_1} = \frac{\overline{O_1U} \times \sin \measuredangle OUO_1}{\sin \measuredangle O_1OU} = \frac{\left(R_1 + \frac{G+c}{2}\right) \cdot \sin F}{\sin \theta}. \qquad (2)$$

Solve for $\overline{OO_1}$.

$$\overline{OH} = \overline{OD} \cdot \cos \measuredangle DOH = R \cdot \cos (180 - \Delta) = - R \cdot \cos \Delta.$$

$$\overline{JH} = \overline{O_1V} = \overline{I_1I} = (\overline{I_1U_1} + \overline{U_1I}) = \overline{O_1U_1} \cdot \cos \measuredangle O_1U_1I_1 + \overline{U_1I}$$

$$= \left(R_1 + \frac{G+c_1}{2}\right) \cdot \cos F_1 + \frac{G+c_1}{2}.$$

$$\overline{JO} = \overline{JH} - \overline{OH} = \left(R_1 + \frac{G+c_1}{2}\right) \cdot \cos F_1 + \frac{G+c_1}{2} + R \cdot \cos \Delta. \quad (3)$$

Solve for $\overline{JO}$.

$$\cos \beta = \cos \measuredangle O_1OJ = \frac{\overline{JO}}{\overline{OO_1}}$$

$$= \frac{[(2 \cdot R_1 + G + c_1) \cdot \cos F_1 + G + c_1 + 2\,R \cdot \cos \Delta] \cdot \sin \theta}{(2 \cdot R_1 + G + c) \sin F}. \quad (4)$$

Solve for β.

$$\phi = \Delta - (\beta + \phi). \qquad (5)$$

$$\phi_1 = (\beta + \theta) - (F + F_1). \qquad (6)$$

$$T_1 = R_1 \cdot \tan \frac{\phi_1}{2}. \qquad (7)$$

$$x = \overline{DC} + K = 2 \cdot R \cdot \sin \frac{\phi}{2} + K \qquad (8)$$

$= \frac{\phi}{D} \times 100 + K$, where ϕ and D are expressed in degrees and decimals of degrees.

$$\overline{DP} = \overline{VH} - \overline{DH} - \overline{VI} + \overline{PI}$$

$$= \overline{OO_1} \sin \measuredangle O_1OJ - \overline{OD} \cdot \sin \measuredangle DOH - \overline{O_1U_1} \cdot \sin \measuredangle U_1O_1V + \overline{PI}$$

$$= \overline{OO_1} \cdot \sin \beta - R \cdot \sin \Delta - \left(R_1 + \frac{G+c_1}{2}\right) \cdot \sin F_1 + K_1. \qquad (9)$$

When $\Delta = 90°$, the given straight track passes through the center of the given curved track. When $\Delta < 90°$, the given straight track passes on the opposite side of the center of the given curved track from that shown in Fig. 23.

The equations of Problem 25 are true for all values of Δ when the proper algebraic signs are given the functions of Δ.

If for any reason $\overline{DC}$ is fixed, extend the tangent to the

connecting curve at Q to intersect VH. Measure the distance on this line from Q to the point of intersection with VH and the angle of intersection. This will give the distance $\overline{BI}$ and the angle Δ of Problem 14. Substitute these values in equation (8), Problem 14, and solve for T and x as given therein, which will locate frog F_1.

If for any reason I, Fig. 23, Problem 25, *is fixed*, extend $\overline{BS}$ to intersect the center line of the curve $ACDE$. Measure the distance from S to this point of intersection and the angle of intersection. These give the distance $\overline{DP}$ and angle Δ of Problem 15. Solve by Problem 15, Case 3, or by graphics for the location of frog F.

Problem 26, Case 1.

To locate the frog points for a connecting track between the inside of a curved track and any intersecting straight track, using frogs of different number and simple curve tangent to the heels of the frogs.

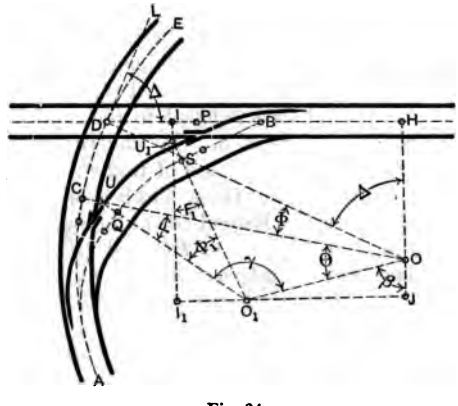

Fig. 24.

Where $R \cdot \cos \Delta < [R_1 + \frac{1}{2}(G + c)] \cos F_1 + \frac{1}{2}(G + c)$.

Given: ACE and DH, the center lines of the given tracks, which intersect at D,

N and N_1 = Frog numbers,

F and F_1 = Frog angles,

K and K_1 = Distance point to heel of frogs,
c and c_1 = Spread of frogs at heel,
R = Radius of given curved track,
R_1 = Radius of connecting track tangent to heels of frogs,
G = Gage of tracks.

Measure in the field

$\Delta = \measuredangle LDH.$

Required:

ϕ = Center angle of given curved track between the point of intersection D and the heel of frog F at C,
ϕ_1 = Center angle of connecting track tangent to heels of frogs,
$\overline{DC}$ = Chord of given curved track between D and C,
$x = \overline{DC} + K$ = Distance from D to point of frog F,
T_1 = Tangent distance for connecting curve,
$\overline{DP}$ = Distance on center line of given straight track from D to point opposite point of frog F_1 at P.

In Fig. 24, A, C, D, E are points on center line of given curved track. D, I, P, B, H are points on center line of given straight track. O is the center of the given curved track and O_1 is the center of the connecting track tangent to the heel of frog F at Q and to heel of frog F_1 at S. $\overline{OD}$ and $\overline{OC}$ are radii of given curved track. $\overline{OC}$ is $\perp$ to heel of frog F. $\overline{OS}$ and $\overline{OQ}$ are radii of connecting track. $\overline{OS}$ is $\perp$ to heel of frog F_1 and $\overline{OQ}$ is $\perp$ to heel of frog F. Extend $\overline{OQ}$ to intersect $\overline{OC}$ at U. $\overline{CU} = \overline{QU} = \frac{1}{2}(G + c)$, $\overline{II_1}$ is $\perp$ to $\overline{DH}$ and to the heel of frog F_1. Extend $\overline{O_1S}$ to intersect $\overline{II_1}$ at U_1. $\overline{SU_1} = \overline{IU_1} = \frac{1}{2}(G + c_1)$. $\overline{I_1J}$ is $\parallel$ to $\overline{DH}$ and passes through O_1. $\overline{HJ}$ is $\perp$ to $\overline{DH}$ and passes through O. $\measuredangle LDH = \measuredangle DOH = \Delta$, $\measuredangle DOC = \phi$, $\measuredangle U_1O_1U = \phi_1$, $\measuredangle OUO_1 = F$, $\measuredangle IBS = \measuredangle O_1U_1I_1 = F_1$. Let $\measuredangle UOO_1 = \theta$, let $\measuredangle OO_1U = \gamma$, and let $\measuredangle O_1OJ = \beta$. P = point on center line of given straight track opposite point of frog F_1, and $\overline{IP} = K$.

$$\frac{\overline{OU} + \overline{O_1U}}{\overline{OU} - \overline{O_1U}} = \frac{\tan \frac{1}{2}(\measuredangle UO_1O + \measuredangle O_1OU)}{\tan \frac{1}{2}(\measuredangle UO_1O - \measuredangle O_1OU)} = \frac{\tan \frac{1}{2}(F + \theta)}{\tan \frac{1}{2}(F - \theta)}$$

$$= \frac{\tan \frac{1}{2}(180 - F)}{\tan \frac{1}{2}[180 - (F + 2\theta)]} = \frac{\cot \frac{1}{2}F}{\cot \frac{1}{2}(F + 2\theta)} = \frac{\tan \frac{1}{2}(F + 2\theta)}{\tan \frac{1}{2}F}.$$

$$\tan\frac{1}{2}(F+2\theta)=\frac{R+R_1}{R-R_1-G-c}\tan\frac{1}{2}F. \tag{1}$$

$$\gamma=180-F-\theta.$$

Solve for θ and γ.

$$\overline{OH}=\overline{OD}\cdot\measuredangle DOH=R\cdot\cos\Delta.$$

$$\overline{HJ}=\overline{II_1}=\overline{O_1U_1}\cdot\cos\measuredangle O_1U_1I_1+\overline{IU}$$

$$=\left(R_1+\frac{G+c_1}{2}\right)\cdot\cos F_1+\frac{G+c_1}{2}.$$

$$\overline{OJ}=\overline{HJ}-\overline{HO}=\left(R_1+\frac{G+c_1}{2}\right)\cdot\cos F_1+\frac{G+c_1}{2}-R\cdot\cos\Delta. \tag{2}$$

Solve for $\overline{OJ}$.

$$\overline{OO_1}:\overline{O_1U}::\sin\measuredangle OUO_1:\sin\measuredangle UOO_1.$$

$$\overline{OO_1}=\frac{\left(R_1+\frac{G+c}{2}\right)\cdot\sin F}{\sin\theta}. \tag{3}$$

Solve for $\overline{OO_1}$.

$$\cos\beta=\cos\measuredangle O_1OJ=\frac{\overline{OJ}}{\overline{OO_1}}$$

$$=\frac{[(2\cdot R_1+G+c_1)\cos F_1+G+c_1-2\cdot R\cdot\cos\Delta]\cdot\sin\theta}{(2\cdot R_1+G+c)\sin F}. \tag{4}$$

Solve for β.

$$\phi=180-(\Delta+\theta+\beta). \tag{5}$$

$$x=\overline{DC}+K=2\cdot R\cdot\sin\frac{\phi}{2}+K \tag{6}$$

$$=\text{approximately }\frac{\phi}{D}\times 100+K,$$

where ϕ and D are expressed in degrees and decimals.

$$\phi_1=(\Delta+\phi)-(F+F_1)=\gamma-(\beta+F_1). \tag{7}$$

$$T_1=R_1\cdot\tan\frac{\phi_1}{2}. \tag{8}$$

$$\overline{DP}=\overline{DH}-\overline{O_1J}-\overline{I_1O_1}+\overline{IP}=\overline{OD}\cdot\sin\measuredangle DOH$$
$$-\overline{OO_1}\cdot\sin\measuredangle O_1OJ-\overline{O_1U_1}\cdot\sin\measuredangle O_1U_1I_1+\overline{IP}$$
$$=R\cdot\sin\Delta-\overline{OO_1}\cdot\sin\beta-\left(R_1+\frac{G+c_1}{2}\right)\cdot\sin F_1+K_1. \tag{9}$$

Problem 26, Case 2.

To locate the frog points for a connecting track between the inside of a curved track and an intersecting straight track, using frogs of different number and simple curve tangent to the heels of the frogs.

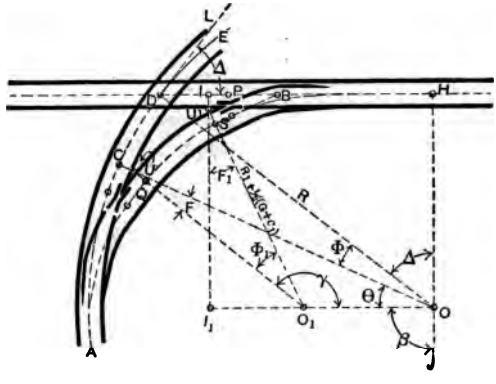

Fig. 25.

Where $R \cdot \cos \Delta = \left(R_1 + \frac{G + c_1}{2}\right) \cdot \cos F_1 + \frac{G + c_1}{2}$.

$$\tan \frac{1}{2}(F + 2\theta) = \frac{R + R_1}{R - R_1 - G - c} \cdot \tan \frac{F}{2}. \tag{1}$$

$$\gamma = 180 - F - \theta.$$

Solve for θ and γ.

$$\overline{OO_1} = \frac{\left(R_1 + \frac{G + c}{2}\right) \cdot \sin F}{\sin \theta}. \tag{2}$$

$$\phi = 90° - (\Delta + \theta). \tag{3}$$

$$x = \overline{DC} + K = 2 \cdot R \cdot \sin \frac{\phi}{2} + K \tag{4}$$

$$= \text{approximately } \frac{\phi}{D} \times 100 + K,$$

where ϕ and D are expressed in degrees and decimals.

$$\phi_1 = (\Delta + \phi) - (F + F_1) = \gamma - (90° + F_1). \tag{5}$$

$$T_1 = R_1 \cdot \tan \frac{\phi_1}{2}. \tag{6}$$

$$\overline{DP} = R \cdot \sin \Delta - \overline{OO_1} - \left(R_1 + \frac{G + c_1}{2}\right) \cdot \sin F_1 + K_1. \tag{7}$$

Problem 26, Case 3.

To locate the frog points for a connecting track between the inside of a curved track and an intersecting straight track, using frogs of different number and simple curve tangent to the heels of the frogs.

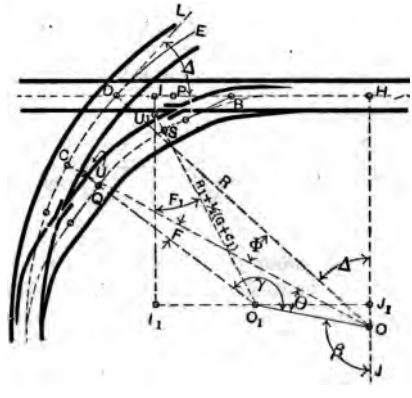

Fig. 26.

Where $R \cdot \cos \Delta > \left(R_1 + \frac{G + c_1}{2}\right) \cdot \cos F_1 + \frac{G + c_1}{2}$.

$$\tan \frac{1}{2}(F + 2\theta) = \frac{R + R_1}{R - R_1 - G - c} \tan \frac{1}{2} F. \qquad (1)$$

$$\gamma = 180 - F - \theta.$$

Solve for θ and γ.

$$\overline{OJ_1} = R \cdot \cos \Delta - \left(R_1 + \frac{G + c_1}{2}\right) \cdot \cos F_1 - \frac{G + c_1}{2}. \qquad (2)$$

$$\overline{OO_1} = \frac{\left(R_1 + \frac{G + c}{2}\right) \cdot \sin F}{\sin \theta}. \qquad (3)$$

$$\cos \beta = -\cos \measuredangle O_1OH = -\frac{\overline{OJ_1}}{\overline{OO_1}}$$

$$= \frac{\left[\left(R_1 + \frac{G + c_1}{2}\right) \cdot \cos F_1 + \frac{G + c_1}{2} - R \cdot \cos \Delta\right] \sin \theta}{\left(R_1 + \frac{G + c}{2}\right) \cdot \sin F}, \qquad (4)$$

which is negative $(-)$, showing β is greater than 90°.

$$\phi = 180 - (\Delta + \theta + \beta). \tag{5}$$

$$x = \overline{DC} + K = 2 \cdot R \cdot \sin\frac{\phi}{2} + K \tag{6}$$

$$= \text{approximately } \frac{\phi}{D} \times 100 + K,$$

where ϕ and D are expressed in degrees and decimals.

$$\phi_1 = (\Delta + \phi) - (F + F_1) = \gamma - (\beta + F_1). \tag{7}$$

$$T_1 = R_1 \cdot \tan\frac{\phi_1}{2}. \tag{8}$$

$$\overline{DP} = R \cdot \sin\Delta - \overline{OO_1} \cdot \sin\beta - \left(R_1 + \frac{G + c_1}{2}\right) \cdot \sin F_1 + K_1. \tag{9}$$

Problem 26, Case 4.

To locate the frog points for a connecting track between the inside of a curved track and an intersecting straight track, using frogs of different number and simple curve tangent to the heels of the frogs.

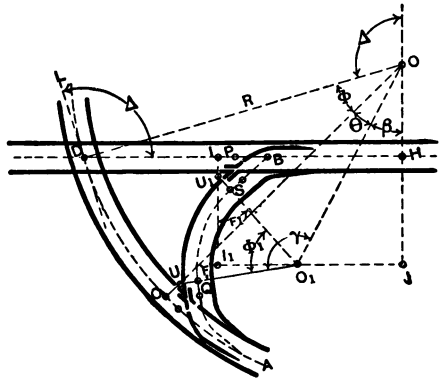

Fig. 27.

Where $\Delta > 90°$.

$$\tan\frac{1}{2}(F + 2\theta) = \frac{R + R_1}{R - R_1 - G - c}\tan\frac{1}{2}F. \tag{1}$$

$$\gamma = 180 - F - \theta.$$

Solve for θ and γ.

$$\overline{OJ} = \left(R_1 + \frac{G + c_1}{2}\right) \cos F_1 + \frac{G + c_1}{2} - R \cdot \cos \Delta. \tag{2}$$

Δ being greater than 90°, $\cos \Delta$ is negative (−).

$$\overline{OO_1} = \frac{\left(R_1 + \frac{G + c}{2}\right) \cdot \sin F}{\sin \theta}. \tag{3}$$

$$\cos \beta = \frac{\overline{OJ}}{\overline{OO_1}}$$

$$= \frac{\left[\left(R_1 + \frac{G + c_1}{2}\right) \cdot \cos F_1 + \frac{G + c_1}{2} - R \cdot \cos \Delta\right] \cdot \sin \theta}{\left(R_1 + \frac{G + c}{2}\right) \cdot \sin F}. \tag{4}$$

Solve for β.

$$\phi = 180 - (\Delta + \theta + \beta). \tag{5}$$

$$x = \overline{DC} + K = 2 \cdot R \cdot \sin \frac{\phi}{2} + K. \tag{6}$$

$$= \text{approximately } \frac{\phi}{D} \times 100 + K,$$

where ϕ and D are expressed in degrees and decimals.

$$\phi_1 = (\Delta + \phi) - (F + F_1) = \gamma - (\beta + F_1). \tag{7}$$

$$T_1 = R_1 \cdot \tan \frac{\phi_1}{2}. \tag{8}$$

$$\overline{DP} = R \cdot \sin \Delta - \overline{OO_1} \cdot \sin \beta - \left(R_1 + \frac{G + c_1}{2}\right) \cdot \sin F_1 + K_1. \tag{9}$$

Problem 26, Case 5.

When $\overline{DC}$ of any of the preceding cases is fixed.

Extend the tangent to the connecting curve at Q to intersect $\overline{DH}$. Measure the distance from Q to this point of intersection and the angle of intersection. These give the distance $\overline{BI}$ and angle Δ of Problem 14. Substitute these values in equation (8), Problem 14, and solve for T and x as given therein, which will locate frog F_1.

Problem 26, Case 6.

When $\overline{DP}$ is fixed.

Extend $\overline{BS}$ to intersect the center line of ACD. Measure the distance from S to this point of intersection and the angle

of intersection. These give the distance $\overline{DP}$ and angle Δ of Case 6, Problem 16. Substitute these values in Problem 16, Case 6, and solve to locate frog F. Or solve graphically.

Problem 27.

To locate the frog points for a connecting track between the inside of one and the outside of the other of any two intersecting curved tracks, using frogs of different number and simple curve tangent to the heels of the frogs.

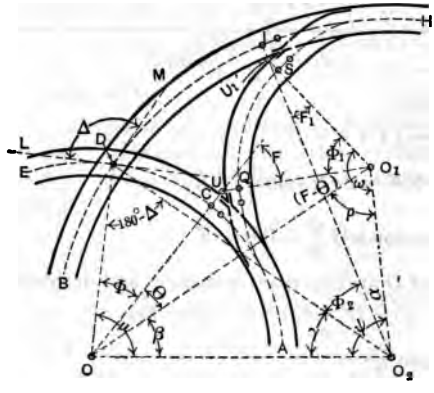

Fig. 23.

Given: A, C, D, E and B, D, I, H, points on the center lines of the given curved tracks that intersect at D,

N and N_1 = The frog numbers,

F and F_1 = The frog angles,

K and K_1 = The distance from the point to the heels of the frogs,

c and c_1 = The spread of the frogs at the heels,

R = Radius of curve $ACDE$,

R_2 = Radius of curve $BDIH$,

R_1 = Radius of connecting curve tangent to the heels of the frogs,

G = Gage of the tracks.

Measure in the field

$$\Delta = \measuredangle\, LDM.$$

Required:

ϕ = Center angle between the point of intersection D and the heel of frog F at C,

ϕ_2 = Center angle between the point of intersection D and the heel of frog F_1 at I,

ϕ_1 = Center angle of the connecting curve tangent to the heels of the frogs,

$\overline{DC}$ = Chord of given curve ACD between D and C,

$\overline{DI}$ = Chord of given curve BDI between D and I.

In Fig. 28 let D = point of intersection of center lines of given tracks. Let O be the center of curve $ACDE$, O_2 the center of curve $BDIH$ and O_1 the center of the connecting curve. Draw the radii $\overline{OD} = R$ and $\overline{O_2D} = R_2$ and join O and O_2. Draw $\overline{OU} = [R + \frac{1}{2}(G + c)]$ and $\overline{O_1U} = [R_1 + \frac{1}{2}(G + c)]$ $\perp$ to the heel of frog F and join O and O_1. Draw $\overline{O_2I} = R_2$ and $\overline{O_1U_1} = [R_1 + \frac{1}{2}(G + c_1)]$ $\perp$ to the heel of frog F_1, then $\overline{O_2U_1} = [R_2 - \frac{1}{2}(G + c_1)]$. Join O_1 and O_2. $\overline{DL}$ and $\overline{DM}$ are tangent to the given curves at D, and $\measuredangle LDM = (180 - \measuredangle ODO_2) = \Delta$, $\measuredangle OUO_1 = (180 - F)$ and $\measuredangle O_1U_1O_2 = F_1$.

$$\frac{\overline{O_2D} + \overline{OD}}{\overline{O_2D} - \overline{OD}} = \frac{\tan\frac{1}{2}(\measuredangle O_2OD + \measuredangle OO_2D)}{\tan\frac{1}{2}(\measuredangle O_2OD - \measuredangle OO_2D)} = \frac{\tan\frac{1}{2}(\mu + \gamma)}{\tan\frac{1}{2}(\mu - \gamma)}.$$

But $(\mu + \gamma) = \Delta$.

$$\tan\frac{1}{2}(\mu - \gamma) = \frac{(R_2 - R)\cdot\tan\frac{\Delta}{2}}{R_2 + R}. \tag{1}$$

Solve for μ and γ.

Then $\overline{OD} : \overline{OO_2} :: \sin\measuredangle OO_2D : \sin\measuredangle ODO_2$.

$$\overline{OO_2} = \frac{R\cdot\sin\Delta}{\sin\gamma}. \tag{2}$$

Solve for $\overline{OO_2}$.

Similarly

$$\tan\frac{1}{2}(F - 2\theta) = \frac{(R - R_1)\cdot\tan\frac{F}{2}}{R + R_1 + G + c}. \tag{3}$$

Solve for θ.

Then $$\overline{OO_1} = \frac{[R_1 + \frac{1}{2}(G + c)] \cdot \sin F}{\sin \theta}. \tag{4}$$

Solve for $\overline{OO_1}$.

Similarly

$$\tan \frac{1}{2}(\omega - \alpha) = \frac{[R_2 - (R_1 + G + c_1)] \cdot \tan \frac{1}{2}(180 - F_1)}{R_2 + R_1}. \tag{5}$$

Solve for ω and α. $(\omega + \alpha) = (180 - F_1)$.

$$\overline{O_2O_1} = \frac{[R_2 - \frac{1}{2}(G + c_1)] \cdot \sin F_1}{\sin (F_1 + \alpha)}. \tag{6}$$

The three sides of $\triangle\, OO_1O_2O$ are now known.

Calling $$\frac{\overline{OO_1} + \overline{O_1O_2} + \overline{O_2O}}{2} = s$$

and letting

$$r = \sqrt{\frac{(s - \overline{OO_1})(s - \overline{O_1O_2})(s - \overline{O_2O})}{s}}$$

we have

$$\tan \frac{1}{2}\psi = \frac{r}{s - \overline{OO_1}}. \tag{7}$$

$$\tan \frac{1}{2}\beta = \frac{r}{s - \overline{O_1O_2}}. \tag{8}$$

$$\tan \frac{1}{2}\rho = \frac{r}{s - \overline{O_2O}}. \tag{9}$$

$$\phi = \mu - (\theta + \beta). \tag{10}$$

$$\phi_2 = \psi - (\gamma + \alpha). \tag{11}$$

$$\phi_1 = \omega - (\rho + F - \theta). \tag{12}$$

$$\overline{DC} = 2 \cdot R \cdot \sin \frac{\phi}{2}. \tag{13}$$

$$\overline{DI} = 2 \cdot R_2 \cdot \sin \frac{\phi_2}{2}. \tag{14}$$

Problem 28.

To locate the frog points for a connecting track between the outside of both of any two intersecting curved tracks, using frogs of different number and simple curve tangent to the heels of the frogs.

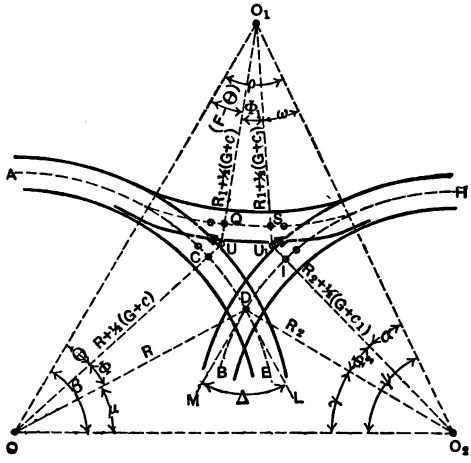

Fig. 29.

Given: A, C, D, E and B, D, I, H, points on the center lines of the given curved tracks which intersect at D,

N and N_1 = The frog numbers,

F and F_1 = The frog angles,

K and K_1 = The distance from the point to the heel of the frogs,

c and c_1 = The spread of the frogs at the heel,

R = Radius of center line of the given curve $ACDE$,

R_2 = Radius of center line of the given curve $BDIH$,

R_1 = Radius of center line of the connecting curve,

G = Gage of the tracks.

Measure in the field

$\Delta = \measuredangle LDM$.

Required:

ϕ = Center angle of given curve $ACDE$ between the point of intersection D and the heel of frog F at C,

$$\overline{DC} = 2 \cdot R \cdot \sin \frac{\phi}{2}. \tag{13}$$

$$\overline{DI} = 2 \cdot R_2 \cdot \sin \frac{\phi_2}{2}. \tag{14}$$

frog points for a connecting track between the *any two intersecting curved tracks, using frogs* *ber and simple curve tangent to heels of frogs.*

, D, E and B, D, I, H, points on the center lines

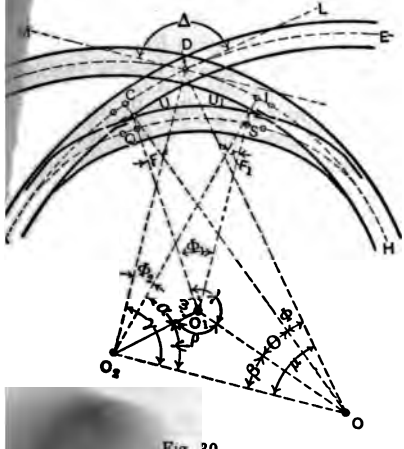

Fig. 30.

curved tracks which intersect at D,
The frog numbers,
The frog angles,
The distance point to heel of frogs,
= The spread of frogs at the heel,
= Radius of the center line of the given curve $ACDE$,
R_2 = Radius of the center line of the given curve $BDIH$,
R_1 = Radius of the connecting curve tangent to the heels of the frogs,
G = Gage of tracks.

$\phi_2 =$ Center angle of given curve $BDIH$ between the point of intersection D and the heel of frog F_1 at I,

$\phi_1 =$ Center angle of connecting curve tangent to the heels of the frogs,

$\overline{DC} =$ Chord of given curve $ACDE$ between D and C,

$\overline{DI} =$ Chord of given curve $BDIH$ between D and I.

Construction of figure same as that of Problem 27.

$$\tan\frac{1}{2}(\mu - \gamma) = \frac{(R_2 - R)\tan\frac{1}{2}\Delta}{R_2 + R}. \tag{1}$$

Solve for μ and γ. $(\mu + \gamma) = \Delta$.

$$\overline{OO_2} = \frac{R \cdot \sin\Delta}{\sin\gamma}. \tag{2}$$

$$\tan\frac{1}{2}(F - 2\theta) = \frac{(R - R_1)\cdot\tan\frac{1}{2}F}{R + R_1 + G + c}. \tag{3}$$

Solve for θ.

$$\overline{OO_1} = \frac{[R_1 + \frac{1}{2}(G + c)]\cdot\sin F}{\sin\theta}. \tag{4}$$

$$\tan\frac{1}{2}(\omega - \alpha) = \frac{(R_2 - R_1)\cdot\tan\frac{F_1}{2}}{R_2 + R_1 + G + c_1}. \tag{5}$$

Solve for ω and α. $(\omega + \alpha) = F_1$.

$$\overline{O_2O_1} = \frac{[R_2 + \frac{1}{2}(G + c_1)]\cdot\sin F_1}{\sin\omega}. \tag{6}$$

The three sides of $\triangle\, OO_1O_2O$ are now known, therefore, calling $\dfrac{\overline{OO_1} + \overline{O_1O_2} + \overline{O_2O}}{2} = s$ and letting

$$r = \sqrt{\frac{(s - \overline{OO_1})(s - \overline{O_1O_2})(s - \overline{O_2O})}{s}},$$

we have

$$\tan\frac{1}{2}\psi = \frac{r}{s - \overline{OO_1}}. \tag{7}$$

$$\tan\frac{1}{2}\beta = \frac{r}{s - \overline{O_1O_2}}. \tag{8}$$

$$\tan\frac{1}{2}\rho = \frac{r}{s - \overline{O_2O}}. \tag{9}$$

$$\phi = \beta - (\mu + \theta). \tag{10}$$

$$\phi_2 = \psi - (\gamma + \alpha). \tag{11}$$

$$\phi_1 = \rho - (\omega + F - \theta). \tag{12}$$

$$\overline{DC} = 2 \cdot R \cdot \sin \frac{\phi}{2}. \tag{13}$$

$$\overline{DI} = 2 \cdot R_2 \cdot \sin \frac{\phi_2}{2}. \tag{14}$$

Problem 29.

To locate the frog points for a connecting track between the inside of both of any two intersecting curved tracks, using frogs of different number and simple curve tangent to heels of frogs.

Given: A, C, D, E and B, D, I, H, points on the center lines

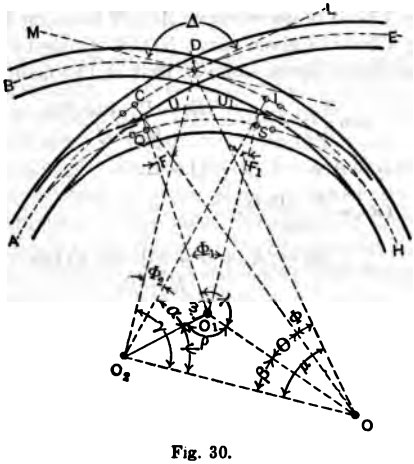

Fig. 30.

of the given curved tracks which intersect at D,
N and N_1 = The frog numbers,
F and F_1 = The frog angles,
K and K_1 = The distance point to heel of frogs,
c and c_1 = The spread of frogs at the heel,
R = Radius of the center line of the given curve $ACDE$,
R_2 = Radius of the center line of the given curve $BDIH$,
R_1 = Radius of the connecting curve tangent to the heels of the frogs,
G = Gage of tracks.

Measure in the field

$$\Delta = \text{Angle } LDM.$$

Required:

ϕ = Center angle of given curve $ACDE$ between the point of intersection D and the heel of frog F at C,

ϕ_2 = Center angle of given curve $BDIH$ between the point of intersection D and the heel of frog F_1 at I,

ϕ_1 = Center angle of connecting curve tangent to the heels of the frogs,

$\overline{DC}$ = Chord of given curve $ACDE$ between D and C,

$\overline{DI}$ = Chord of given curve $BDIH$ between D and I.

Construction of figure same as that of Problem 27.

$$\tan \frac{1}{2}(\mu - \gamma) = \frac{(R_2 - R) \cdot \tan \frac{1}{2} \Delta}{R_2 + R}. \tag{1}$$

Solve for μ and γ. $(\mu + \gamma) = \Delta$.

$$\overline{OO_2} = \frac{R \cdot \sin \Delta}{\sin \gamma}. \tag{2}$$

$$\tan \frac{1}{2}(\lambda - \theta) = \frac{[R - (R_1 + G + c)] \cdot \tan \frac{1}{2}(180 - F)}{R + R_1} \tag{3}$$

Solve for λ and θ. $(\lambda + \theta) = (180 - F)$.

$$\overline{OO_1} = \frac{[R - \frac{1}{2}(G + c)] \cdot \sin F}{\sin (F + \theta)}. \tag{4}$$

$$\tan \frac{1}{2}(\omega - \alpha) = \frac{[R_2 - (R_1 + G + c_1)] \cdot \tan \frac{1}{2}(180 - F_1)}{R_2 + R_1}. \tag{5}$$

Solve for ω and α. $(\omega + \alpha) = (180 - F_1)$.

$$\overline{O_1O_2} = \frac{[R_2 - \frac{1}{2}(G + c_1)] \cdot \sin F_1}{\sin (F + \alpha)}. \tag{6}$$

The three sides of the triangle OO_1O_2O are now known and letting $\dfrac{\overline{OO_1} + \overline{O_1O_2} + \overline{O_2O}}{2} = s$ and

$$r = \sqrt{\frac{(s - \overline{OO_1})(s - \overline{O_1O_2})(s - \overline{O_2O})}{s}}$$

we have

$$\tan \frac{1}{2}\psi = \frac{r}{s - \overline{OO_1}}. \tag{7}$$

$$\tan\frac{1}{2}\beta = \frac{r}{s - \overline{O_1O_2}}. \tag{8}$$

$$\tan\frac{1}{2}\rho = \frac{r}{s - \overline{O_2O}}. \tag{9}$$

$$\phi = \mu - (\beta + \theta). \tag{10}$$

$$\phi_2 = \gamma - (\psi + a). \tag{11}$$

$$\phi_1 = (\lambda + \rho + \omega) - 360. \tag{12}$$

$$\overline{DC} = 2 \cdot R \cdot \sin\frac{\phi}{2}. \tag{13}$$

$$\overline{DI} = 2 \cdot R_2 \cdot \sin\frac{\phi_2}{2}. \tag{14}$$

In problems 27, 28 and 29 in case the location of either of the frogs is fixed, the location of the other frog may be determined thus, consider Figure 28, if the location of frog F at C is fixed, extend the center line of the connecting track parallel to the frog through Q to intersect the center line $BDIH$. Measure the distance from Q to this point of intersection and the angle of intersection. This gives $\overline{PD}$ and $\triangle$ of Case 6, Problem 16, which will locate frog F_1 at I. Similarly, if the location of frog F_1 at I is fixed, extend the center line of the connecting track parallel to the frog through S to intersect the center line $ACDE$. Measure the distance from S to this point of intersection and the angle of intersection. This gives $\overline{PD}$ and $\triangle$ of Case 3, Problem 15, which will locate frog F at C.

CHAPTER V

Wyes

Problem 30.

To locate the frog points for a wye composed of three simple curves of different radii tangent to the heels of the frogs, using frogs of different number. The wye being on the outside of the principal curve.

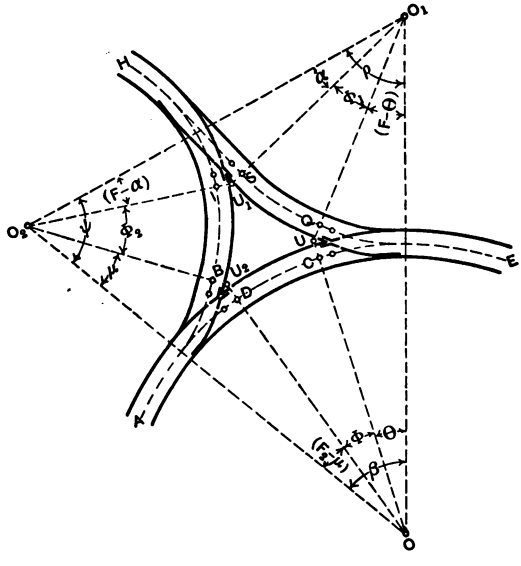

Fig. 31.

Given: A, D, C, E points on the center line of one of the given curved tracks,

N, N_1 and N_2 = The frog numbers,

F, F_1 and F_2 = The frog angles,

K, K_1 and K_2 = The distance point to heel of the frogs,

c, c_1 and c_2 = The spread of the frog at the heel,
R = Radius of the center line of the given curve $ADCE$,
R_1 = Radius of the center line of one leg of the wye,
R_2 = Radius of the center line of the other leg of the wye,
G = Gage of the tracks.

Required:

ϕ, ϕ_1 and ϕ_2 the center angles of the curved tracks between the heels of the frogs,

$\overline{DC}$, $\overline{QS}$ and $\overline{IB}$ the chords of the curves between the heels of the frogs.

Let A, D, C, E be points on the center line of the principal curve. Assume the frog F at C to be fixed. Let O, O_1 and O_2 be the centers of the given curves. Draw $\overline{OO_1}$, $\overline{O_1O_2}$ and $\overline{O_2O}$. Draw $\overline{OU} = R + \frac{1}{2}(G + c)$ and $\overline{O_1U} = R_1 + \frac{1}{2}(G + c)$ $\perp$ to the heel of frog F. Draw $\overline{O_1U_1} = R_1 + \frac{1}{2}(G + c_1)$ and $\overline{O_2U_1} = R_2 + \frac{1}{2}(G + c_1)$ $\perp$ to the heel of frog F_1 and draw $\overline{O_2U_2} = R_2 + \frac{1}{2}(G + c_2)$ and $\overline{OU_2} = R + \frac{1}{2}(G + c_2)$ $\perp$ to the heel of frog F_2. $\measuredangle U_2OU = \phi$, $\measuredangle UO_1U_1 = \phi_1$ and $\measuredangle U_1O_2U_2 = \phi_2$. $\measuredangle OUO_1 = (180 - F)$, $\measuredangle O_1U_1O_2 = (180 - F_1)$ and $\measuredangle O_2U_2O = (180 - F_2)$.

$$\tan\frac{1}{2}(F - 2\theta) = \frac{(R - R_1)\tan\frac{1}{2}F}{R + R_1 + G + c}. \tag{1}$$

$$\overline{OO_1} = \frac{[R + \frac{1}{2}(G + c)]\cdot\sin F}{\sin(F - \theta)}. \tag{2}$$

$$\tan\frac{1}{2}(F_1 - 2\alpha) = \frac{(R_1 - R_2)\tan\frac{1}{2}F_1}{R_1 + R_2 + G + C_1}. \tag{3}$$

$$\overline{O_1O_2} = \frac{[R_1 + \frac{1}{2}(G + c_1)]\cdot\text{in } F_1}{\sin(F_1 - \alpha)}. \tag{4}$$

$$\tan\frac{1}{2}(F_2 - 2\mu) = \frac{(R_2 - R_1)\cdot\tan\frac{1}{2}F_2}{R_2 + R + G + c_2}. \tag{5}$$

$$\overline{O_2O} = \frac{[R_2 + \frac{1}{2}(G + c_2)]\cdot\sin F_2}{\sin(F_2 - \mu)}. \tag{6}$$

Let $\dfrac{\overline{OO_1} + \overline{O_1O_2} + \overline{O_2O}}{2} = s$ and

$$r = \sqrt{\frac{(s - \overline{OO_1})(s - \overline{O_1O_2})(s - \overline{O_2O})}{s}},$$

then
$$\tan\frac{1}{2}\beta = \frac{r}{s - \overline{O_1O_2}}. \tag{7}$$
$$\tan\frac{1}{2}\rho = \frac{r}{s - \overline{O_2O}}. \tag{8}$$
$$\tan\frac{1}{2}\psi = \frac{r}{s - \overline{OO_1}}. \tag{9}$$
$$\phi = \beta - (\theta + F_2 - \mu). \tag{10}$$
$$\phi_1 = \rho - (a + F - \theta). \tag{11}$$
$$\phi_2 = \psi - (\mu + F_1 - \alpha). \tag{12}$$
$$\overline{DC} = 2 \cdot R \cdot \sin\frac{\phi}{2}. \tag{13}$$
$$\overline{QS} = 2 \cdot R_1 \cdot \sin\frac{\phi_1}{2}. \tag{14}$$
$$\overline{IB} = 2 \cdot R_2 \cdot \sin\frac{\phi_2}{2}. \tag{15}$$

Problem 31.

To locate the frog points for a wye composed of three simple curves, of different radii, tangent to the heels of the frogs, using frogs of different number. When the wye is on the inside of the principal curve.

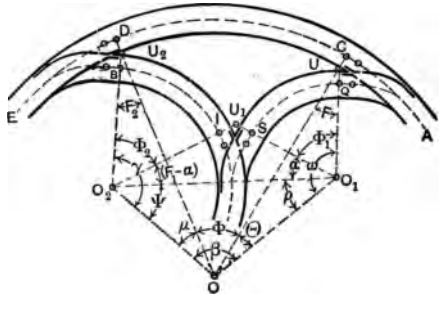

Fig. 32.

Given: A, C, D, E points on the center line of the given principal curve,

N, N_1 and N_2 = The frog numbers,

F, F_1 and F_2 = The frog angles,

K, K_1 and K_2 = The distance point to heel of frogs,

c, c_1 and c_2 = The spread of the frogs at the heel,

R = Radius of center line of the principal curve $ACDE$,

R_1 = Radius of center line of one leg of the wye,

R_2 = Radius of center line of the other leg of the wye,

G = Gage of the tracks.

Required:

ϕ, ϕ_1 and ϕ_2 = The center angles of the curves between the heels of the frogs.

$\overline{DC}$, $\overline{QS}$ and $\overline{IB}$ = Chords of the curves between the heels of the frogs.

$$\tan\frac{1}{2}(\omega-\theta)=\frac{[R-(R_1+G+c)]\cdot\tan\frac{1}{2}(180-F)}{R+R_1}. \tag{1}$$

$$\overline{OO_1}=\frac{[R-\frac{1}{2}(G+c)]\cdot\sin F}{\sin(F+\theta)}. \tag{2}$$

$$\tan\frac{1}{2}(F_1-2\alpha)=\frac{(R_1-R_2)\cdot\tan\frac{1}{2}F_1}{R_1+R_2+G+c_1}. \tag{3}$$

$$\overline{O_1O_2}=\frac{[R_1+\frac{1}{2}(G+c_1)]\cdot\sin F_1}{\sin(F_1-\alpha)}. \tag{4}$$

$$\tan\frac{1}{2}(\gamma-\mu)=\frac{[R-(R_2+G+c_2)]\cdot\tan\frac{1}{2}(180-F_2)}{R+R_2}. \tag{5}$$

$$\overline{O_2O}=\frac{[R-\frac{1}{2}(G+c_2)]\cdot\sin F_2}{\sin(F_2+\mu)}. \tag{6}$$

Let
$$\frac{\overline{OO_1}+\overline{O_1O_2}+\overline{O_2O}}{2}=s$$

and
$$r=\sqrt{\frac{(s-\overline{OO_1})(s-\overline{O_1O_2})(s-\overline{O_2O})}{s}}$$

then
$$\tan\frac{1}{2}\beta=\frac{r}{s-\overline{O_1O_2}}. \tag{7}$$

$$\tan\frac{1}{2}\rho=\frac{r}{s-\overline{O_2O}}. \tag{8}$$

$$\tan\frac{1}{2}\psi=\frac{r}{s-\overline{OO_1}}. \tag{9}$$

$$\phi=\beta-(\theta+\mu). \tag{10}$$

$$\phi_1=\omega-(\rho+\alpha). \tag{11}$$

$$\phi_2=\gamma-(\psi+F_1-\alpha). \tag{12}$$

$$\overline{DC}=2\cdot R\cdot\sin\frac{\phi}{2}. \tag{13}$$

$$\overline{QS} = 2 \cdot R_1 \cdot \sin \frac{\phi_1}{2}. \tag{14}$$

$$\overline{IB} = 2 \cdot R_2 \cdot \sin \frac{\phi_2}{2}. \tag{15}$$

Problem 32.

To locate the frog points for a wye composed of one straight track and two simple curves tangent to the heels of the frogs, using frogs of different number and curves of different radii.

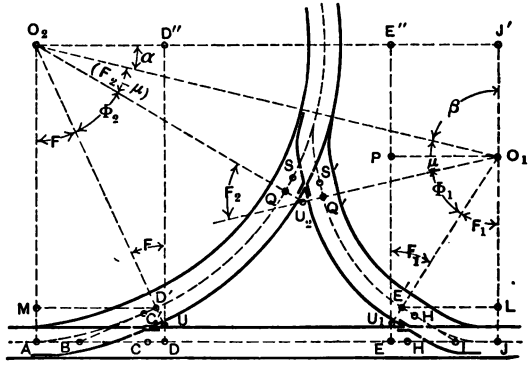

Fig. 33.

Given: A, B, C, D, E, H, I, J points on the center line of the given straight track,

N, N_1 and N_2 = The frog numbers,

F, F_1 and F_2 = The frog angles,

K, K_1 and K_2 = The distance point to heel of frogs,

c, c_1 and c_2 = The spread of the frogs at the heel,

R_1 = Radius of center line of one leg of wye,

R_2 = Radius of center line of the other leg of the wye,

G = Gage of tracks.

Required:

CH = Distance between the points of frogs F and F_1 measured on the center line of the given straight track,

ϕ_1 = Center angle of one leg of wye between the heels of frogs F_1 and F_2,

$\overline{E'Q'}$ = Chord of above leg of wye between the heels of frogs F_1 and F_2,

ϕ_2 = Center angle of the other leg of the wye between the heels of frogs F_2 and F,

$\overline{QD'}$ = Chord of above leg of wye between the heels of frogs F_2 and F.

In Fig. 33 let AJ be the center line of the given straight track. Let C and C' and D and D' represent points on the center line of the given straight track and wye respectively opposite the point and heel of frog F. B = point of intersection of DC and $D'C'$ produced and $\measuredangle DBD' = F$, $\overline{BC} = \overline{BC'} = NG$ and $\overline{CD} = \overline{C'D'} = K$. Similarly E and E', and H and H' are points on the center line of the given straight track and wye respectively opposite the heel and point of frog F_1. I = point of intersection of EH and $E'H'$ produced and $\measuredangle EIE' = F_1$. $\overline{IH} = \overline{IH'} = N_1G$ and $\overline{HE} = \overline{H'E'} = K_1$. Let S and S', and Q and Q' be points on the center line of the wye tracks respectively opposite the point and heel of frog F_2. $\overline{Q'S'} = \overline{QS} = K_2$. Let O_1 be the center of the curve of one leg of the wye. Draw the radii $\overline{O_1E'} = \overline{O_1Q'} = R_1 \perp$ to the heels of frogs F_1 and F_2 respectively. Draw $EPE'' \perp$ to AJ. Extend O_1E' to intersect EE'' at U_1. $\overline{E'U_1} = \overline{EU_1} = \frac{1}{2}(G + c_1)$. Draw $JJ' \perp$ to $\overline{AJ}$ and passing through O_1. Draw $\overline{E'L}$ and $\overline{PO_1} \perp$ to $\overline{JJ'}$. Let O_2 be the center of the curve of the other leg of the wye. Draw the radii $\overline{O_2D'} = \overline{O_2Q} = R_2 \perp$ to the heels of frogs F and F_2 respectively. Draw $\overline{DD''} \perp$ to AJ. Extend $\overline{O_2D'}$ to intersect $\overline{DD''}$ at U then $\overline{D'U} = \overline{DU} = \frac{1}{2}(G + c)$. Extend $\overline{O_1Q'}$ and $\overline{O_2Q}$ to intersect at U_2 then $\overline{Q'U_2} = \overline{QU_2} = \frac{1}{2}(G + c_2)$. From O_2 drop a $\perp$ upon $\overline{AJ}$ at A. From D' draw $\overline{D'M} \perp$ to $\overline{O_2A}$ and from O_2 draw $\overline{O_2J'} \parallel$ to $\overline{AJ}$ and $\perp$ to $\overline{JJ'}$. $\measuredangle AO_2U = \measuredangle O_2UD'' = \measuredangle DBD' = F$. $\measuredangle E''U_1O_1 = \measuredangle U_1O_1J = \measuredangle EIE' = F_1$. $\measuredangle O_1U_2O_2 = (180 - F_2)$. $\measuredangle U_1O_1U_2 = \phi_1$. $\measuredangle U_2O_1O_2 = \mu$. $\measuredangle O_2O_1J' = \beta$. $\measuredangle D'O_2U_2 = \phi_2$. $\measuredangle U_2O_2O_1 = (F_2 - \mu)$ and $\measuredangle O_1O_2J' = \alpha = (90 - \beta)$.

$$\overline{O_2A} = (\overline{O_2M} + \overline{MA}) = \overline{O_2D'} \cdot \cos \measuredangle AO_2U + \overline{BD'} \cdot \sin \measuredangle DBD'$$
$$= R_2 \cdot \cos F + (NG + K) \cdot \sin F.$$
$$\overline{O_1J} = (\overline{O_1L} + \overline{LJ}) = \overline{O_1E'} \cdot \cos \measuredangle U_1O_1J + \overline{IE'} \cdot \sin \measuredangle EIE'$$
$$= R_1 \cdot \cos F_1 + (N_1G + K_1) \cdot \sin F_1.$$
$$\overline{J'O_1} = \overline{J'J} - \overline{O_1J} = \overline{O_2A} - \overline{O_1J}$$
$$= [R_2 \cdot \cos F + (NG + K) \cdot \sin F]$$
$$- [R_1 \cdot \cos F_1 + (N_1G + K_1) \cdot \sin F_1] \qquad (1)$$

$$= \left[\left(R_2 + \frac{G+c}{2}\right) \cdot \cos F + \frac{G+c}{2}\right]$$
$$- \left[\left(R_1 + \frac{G+c_1}{2}\right) \cdot \cos F_1 + \frac{G+c_1}{2}\right].$$

Solve for $\overline{J'O_1}$.

$$\frac{\overline{O_1U_2} + \overline{O_2U_2}}{\overline{O_1U_2} - \overline{O_2U_2}} = \frac{\text{Tan } \frac{1}{2} (\measuredangle U_2O_2O_1 + \measuredangle U_2O_1O_2)}{\text{Tan } \frac{1}{2} (\measuredangle U_2O_2O_1 - \measuredangle U_2O_1O_2)}.$$

$$\tan \frac{1}{2} (F_2 - 2\mu) = \frac{(R_1 - R_2) \cdot \tan \frac{1}{2} F_2}{R_1 + R_2 + G + c_2}. \tag{2}$$

Solve for μ.

$$\overline{O_2O_1} : \overline{O_2U_2} :: \sin \measuredangle O_1U_2O_2 : \sin \measuredangle U_2O_1O_2,$$

$$\overline{O_2O_1} = \frac{[R_2 + \frac{1}{2}(G + c_2)] \cdot \sin F_2}{\sin \mu}. \tag{3}$$

$$\cos \beta = \cos \measuredangle O_2O_1J' = \frac{\overline{J'O_1}}{\overline{O_2O_1}} =$$

$$\frac{\{[R_2 \cdot \cos F + (NG + K) \cdot \sin F] - [R_1 \cdot \cos F_1 + (N_1G + K_1) \cdot \sin F_1]\} \cdot \sin \mu}{[R_2 + \frac{1}{2}(G + c_2)] \cdot \sin F_2}$$

$$= \frac{\left[\left(R_2 + \frac{G+c}{2}\right) \cdot \cos F - \left(R_1 + \frac{G+c_1}{2}\right) \cdot \cos F_1 + \frac{c - c_1}{2}\right] \cdot \sin \mu}{\left(R_2 + \frac{G+c_2}{2}\right) \cdot \sin F_2}. \tag{4}$$

Solve for β.

$$\overline{O_2J'} = \overline{J'O_1} \cdot \tan \measuredangle O_2O_1J'.$$
$$= \{[R_2 \cdot \cos F + (NG + K) \cdot \sin F]$$
$$- [R_1 \cdot \cos F_1 + (N_1G + K_1) \cdot \sin F_1]\} \cdot \tan \beta. \tag{5}$$

Solve for $\overline{O_2J'}$.

$$\overline{CH} = [\overline{AJ} - (\overline{AD} + \overline{EJ}) + (\overline{CD} + \overline{EH})]$$
$$= [\overline{O_2J'} - (\overline{O_2D''} + \overline{PO_1}) + (\overline{CD} + \overline{EH})].$$

$$\overline{CH} = \{[R_2 \cdot \cos F + (NG + K) \cdot \sin F] - [R_1 \cdot \cos F_1$$
$$+ (N_1G + K_1) \cdot \sin F_1]\} \tan \beta - \{[R_2 + \tfrac{1}{2}(G + c)] \cdot \sin F$$
$$+ [R_1 + \tfrac{1}{2}(G + c_1)] \sin F_1\} + (K + K_1).$$

$$\overline{CH} = \overline{O_1O_2} \cdot \sin \beta - \left[\left(R_2 + \frac{G+c}{2}\right) \cdot \sin F\right.$$
$$\left. + \left(R_1 + \frac{G+c_1}{2}\right) \cdot \sin F_1\right] + (K + K_1). \tag{6}$$

$$\phi_1 = 180 - (\beta + \mu + F_1). \tag{7}$$

$$\overline{E'Q'} = 2 \cdot R_1 \cdot \sin \frac{\phi_1}{2}. \tag{8}$$

$$\phi_2 = \beta - [F + (F_2 - \mu)]. \tag{9}$$

$$\overline{QD'} = 2 \cdot R_2 \cdot \sin \frac{\phi_2}{2}. \tag{10}$$

Problems 30, 31 and 32 are based on the assumption that physical conditions or convenience fix the location of one frog in the principal curve or in the straight track.

If in Problem 30 either frog F or F_2, in the principal curve, and F_1 are both fixed, the location of the other frog may be determined by Case 3, Problem 15.

If in Problem 31 either frog F or F_2 and frog F_1 are both fixed, the location of the remaining frog may be determined by Case 6, Problem 16.

If in Problem 32 either frog F or F_1 and frog F_2 are both fixed, the remaining frog may be located by Equations (8) and (1) or (2), Problem 14.

Following are some special cases of wyes.

Problem 33.

To locate the frog points for a wye between the outside of a given curved track and a given straight track, using frogs of different number and two simple curves, one tangent to the given straight line and the heel of one frog in the given curved track and the other tangent to the heels of the remaining two frogs.

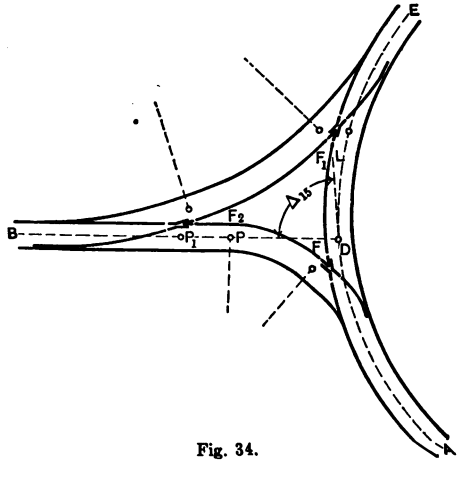

Fig. 34.

Let A, D, E be points on the center line of the given curved track and B, P_1, P points on the center line of the given straight track. Produce BP to intersect ADE at D. Let DL be the tangent to the given curve at the point D. Measure $\measuredangle BDL = \Delta$ of Problem 15 $= (180 - \Delta)$ of Problem 25. Locate frog F by Problem 15 and frogs F_1 and F_2 by Problem 25.

Problem 34.

To locate the frog points for a wye between a straight track and a track composed of a tangent and a given curve. One frog to be on the given straight track, one on the given tangent and one on the outside of the given curve, using frogs of different number and two simple curves. One curve tangent to the heels of the frogs in the given straight track and tangent and one curve tangent to the heel of the frog on the outside of the given curve and to the given straight track.

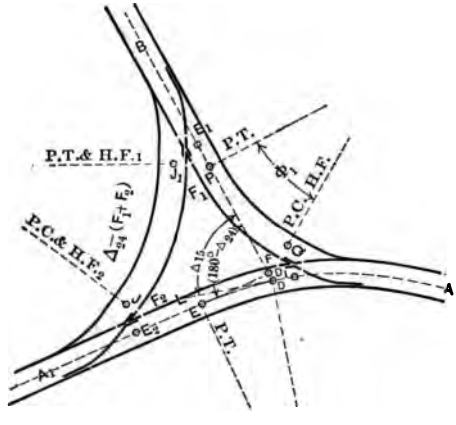

Fig. 35.

Let B, E_1, P be points on the center line of the given straight track. Let A, D, E be points on the center line of the given curve. Let E be the P. T. and E, E_2, A_1 points on the center line of the given tangent. Produce BP to intersect ADE at D. Let DL be tangent to the given curve at D. Measure $\measuredangle LDP = \Delta$ of Problem 15. Substitute this value in Problem 15 and solve to locate frog F.

Produce A_1E_2E to intersect BD at D_1. Measure $\measuredangle BD_1A_1 = (180 - \Delta)$ of Problem 24. Substitute in Problem 24 and solve to locate frogs F_1 and F_2.

Problem 35.

To locate the frog points for a wye between a given straight track and a track composed of a tangent and a given curve. One frog to be on the given straight track, one on the given tangent and one on the inside of the given curve, using frogs of different number and two simple curves. One curve tangent to the heels of the frogs in the given straight track and tangent and one curve tangent to the heel of the frog on the inside of the given curve and to the given straight track.

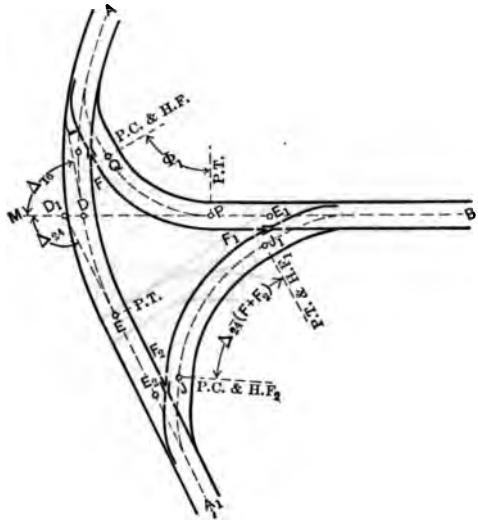

Fig. 36.

Let $B, E_1 P$, be points on the center line of the given straight track. Let A, D, E be points on the center line of the given curve and let E be the P. T. Let E, E_2, A_1 be points on the center line of the given tangent. Produce BP to intersect ADE at D. Let DL be tangent to the given curve at D. Measure $\measuredangle MDL = \Delta$ of Problem 16. Substitute in Problem 16 and solve to locate frog F.

Produce A_1E_2E and BP to intersect at D_1. Measure $\measuredangle MD_1A_1 = \Delta$ of Problem 24. Substitute in Problem 24 and solve to locate frogs F_1 and F_2.

Problem 36.

To locate the frog points for a wye between a given straight track and the inside of a given curved track, using frogs of different number and two simple curves. One curve tangent to the heel of a frog on the inside of the given curved track and to the heel of a frog in the given straight track and one curve tangent to a frog on the inside of the given curved track and to the given straight track.

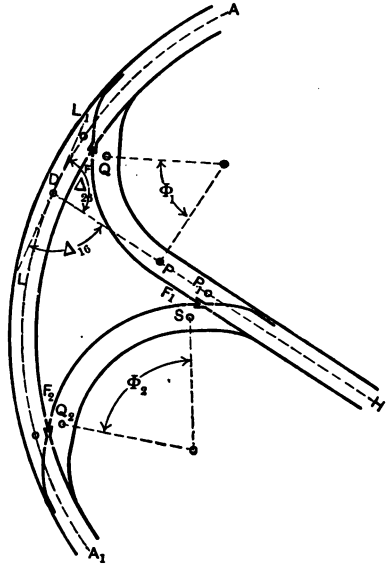

Fig. 37.

Let A, D, A_1 be points on the center line of the given curved track. Let H, P_1, P be points on the center line of the given straight track. Produce HP to intersect ADA_1 at D. Let LDL_1 be tangent to the given curve at D. Measure $\measuredangle LDH = \Delta$ of Problem 16. Substitute in Problem 16 and solve to locate frog F.

$\measuredangle L_1DH = (180 - \measuredangle LDH) = \Delta$ of Problem 26. Substitute in Problem 26 and solve to locate frogs F_1 and F_2.

Problem 37.

To locate the frog points for a wye between two diverging straight tracks, using frogs of different number and two simple curves. One curve tangent to the heel of a frog in each of he given straight tracks and one curve tangent to a frog in one the given straight tracks and to the other given straight track.

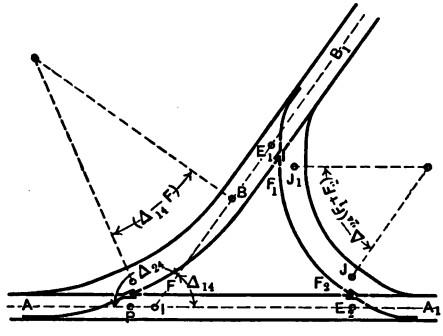

Fig. 38.

Let AA_1 and B_1B represent the center lines of the given straight tracks. Produce B_1B to intersect AA_1 at I. Measure $\measuredangle A_1IB_1 = \Delta$ of Problem 14. Substitute in Problem 14 and solve to locate frog F.

$\measuredangle AIB_1 = (180 - \measuredangle A_1IB_1) = \Delta$ of Problem 24. Substitute in Problem 24 and solve to locate frogs F_1 and F_2.

CHAPTER VI

Parallel and Concentric Sidings

Problem 38.

To lay out a Parallel Siding by offsets.

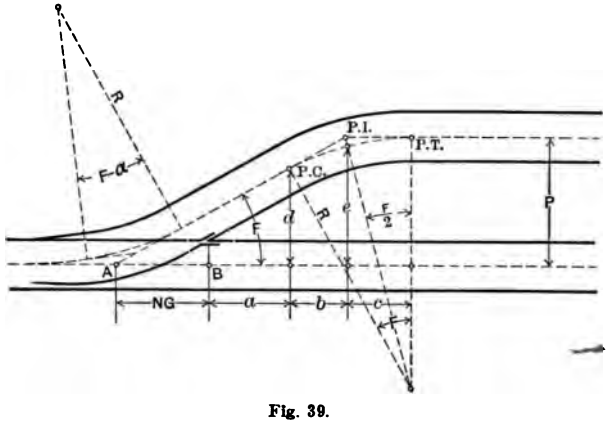

Fig. 39.

Assume R = Radius of lead curve,

$$d = P - R \cdot \text{vers}\, F,$$

$$e = P - R \cdot \text{vers}\, \frac{F}{2},$$

$$a = d \cot F - NG = (P - R \cdot \text{vers}\, F) \cdot \cot F - NG,$$

$$b = R \cdot \left(\sin F - \sin \frac{F}{2}\right),$$

$$c = R \cdot \sin \frac{F}{2}.$$

Having worked out the co-ordinates for any particular frog, R and P, for the same frog and R for any other value of P, say P_1.

b and c remain constant,

d and e vary with P,

a varies as $(P_1 - P) \cot F$.

With a transit.

Locate B which is opposite the point of the frog so that the heel of the frog will come at a rail joint. Measure $\overline{BA} = NG$. Set up over A, sight on B, turn angle $BAC = F$. Obtain point of intersection P. I. Set up over P. I. Set the P. C. and P. T. stakes and by the external set the stake on the center of the curve.

Problem 39.

To lay out a concentric siding on the outside of a principal or main track, using maximum R_1 or minimum degree of curve tangent to the heel of the frog and the concentric siding.

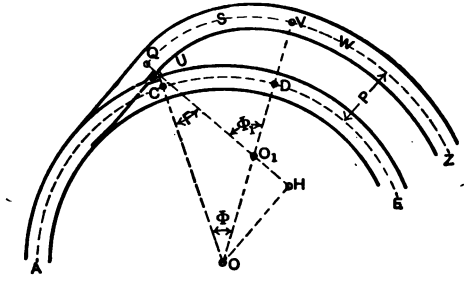

Fig. 40.

Given: $ACDE$ = center line of main track,
VWZ = center line of concentric siding,
P = distance c to c main and siding,
N = Frog number,
F = Frog angle,
K = Distance point to heel,
c = Spread of frog at heel,
R = Radius of main track curve,
$(R + P)$ = Radius of concentric siding,
G = Gage of tracks.

Required:

ϕ_1 = Center angle of curve tangent to heel of frog and concentric siding at point of compound curve V,

ϕ = Center angle of main track curve between the heel of frog C and the point D radially opposite point of compound curve V,

R_1 = Radius of curve tangent to heel of frog,
$\overline{CD}$ = Chord of main track curve between C and D,
$\overline{QV}$ = Chord of siding between Q and V.

Let O be the center of the main track and concentric siding curves.

Let O_1 be the center of the curve tangent to the heel of the frog.

Draw the radii $\overline{OC}$ and $\overline{O_1Q}$ $\perp$ to the heel of the frog. Extend $\overline{OC}$ to intersect $\overline{O_1Q}$ at U then $\overline{CU} = \overline{UQ} = \frac{1}{2}(G + c)$. $\overline{OC} = R$ and $\overline{O_1Q} = R_1$. Draw the radius $\overline{OV}$ of the concentric siding at the point of compound curve. $\overline{OV} = (R + P)$. $\overline{OD} = R$ and $\overline{O_1V} = R_1$, $\measuredangle QO_1V = \phi_1$, $\measuredangle UOV = \phi$, $\measuredangle OUO_1 = F$. Draw $\overline{OH}$ $\perp$ to $\overline{O_1Q}$ extended to H. $\measuredangle OO_1H = \phi_1$.

$$\overline{OU} \cdot \sin F = (R + P - R_1) \sin \phi_1.$$

$$\overline{OU} \cdot \sin F - (R + P) \sin \phi_1 = - R_1 \cdot \sin \phi_1. \tag{1}$$

$$\overline{OU} \cdot \cos F + \overline{QU} = (R + P - R_1) \cos \phi_1 + R_1.$$

$$\overline{OU} \cdot \cos F + \overline{QU} - (R + P) \cos \phi_1 = R_1 (1 - \cos \phi_1). \tag{2}$$

Multiply (1) by $(1 - \cos \phi_1)$ and (2) by $\sin \phi_1$, add and simplify.

$$\overline{OU} \cdot \sin F \cos \phi_1 + [(R + P - \overline{QU}) - \overline{OU} \cdot \cos F] \cdot \sin \phi_1 = \overline{OU} \cdot \sin F. \tag{3}$$

Let $\tan \rho = \dfrac{(R + P - \overline{QU}) - \overline{OU} \cdot \cos F}{\overline{OU} \cdot \sin F}$.

$$\tan \rho = \frac{[R + P - \frac{1}{2}(G + c)] - [R + \frac{1}{2}(G + c)] \cdot \cos F}{[R + \frac{1}{2}(G + c)] \cdot \sin F}. \tag{4}$$

Solve for ρ.

$$A \sin \rho = [R + P - \tfrac{1}{2}(G + c)] - [R + \tfrac{1}{2}(G + c)] \cos F. \tag{5}$$

$$A \cos \rho = [R + \tfrac{1}{2}(G + c)] \cdot \sin F. \tag{6}$$

Square (5) and (6) and add and solve for A.

$$A = \sqrt{\left\{[R+P-\tfrac{1}{2}(G+c)]-[R+\tfrac{1}{2}(G+c)]\cdot\cos F\right\}^2 + \left\{[R+\tfrac{1}{2}(G+c)]\cdot\sin F\right\}^2}, \tag{7}$$

Solve for A.

From (3) (5) and (6).

$$A \cos \phi_1 \cos \rho + A \sin \phi_1 \sin \rho = [R + \tfrac{1}{2}(G + c)] \cdot \sin F.$$

Divide both sides by A and simplify.

$$\cos (\phi_1 - \rho) = \frac{[R + \frac{1}{2}(G + c)] \cdot \sin F}{A}. \tag{8}$$

Solve for ϕ_1.

$$\phi = (\phi_1 - F). \tag{9}$$

$$[R + \tfrac{1}{2}(G + c)] \sin \phi = [R_1 - \tfrac{1}{2}(G + c)] \cdot \sin \phi_1.$$

$$\therefore \quad R_1 = \frac{[R + \frac{1}{2}(G + c)] \cdot \sin \phi}{\sin \phi_1} + \frac{1}{2}(G + c). \qquad (10)$$

$$\overline{CD} = 2 \cdot \mathrm{R} \cdot \sin \frac{\phi}{2}. \qquad (11)$$

$$\overline{QV} = 2 \cdot R_1 \cdot \sin \frac{\phi_1}{2}. \qquad (12)$$

With light curves and frogs of small angle the full clearance distance may be slightly quicker reached in the following manner.

Problem 40.

To lay out a concentric siding on the outside of a principal or main track, using a connecting curve tangent to the line of the frog produced and to the concentric siding, making the radius of the connecting curve equal to the radius of the lead curve for the given frog on straight track.

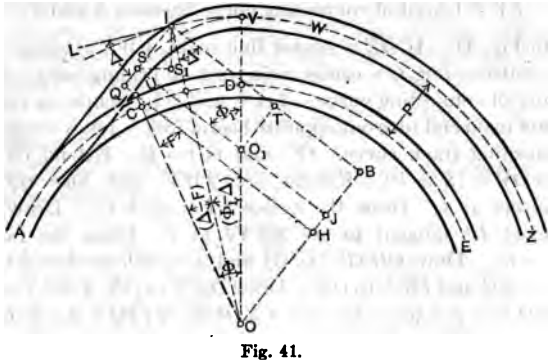

Fig. 41.

Given: $ACDE$ = center line main track,
VWZ = center line concentric siding,
P = center to center tracks,
N = Frog number,
F = Frog angle,
K = Distance point to heel of frog,
c = Spread of frog at heel,
R = Radius of main track curve,
$(R + P)$ = Radius of concentric siding,

R_1 = Radius of connecting curve tangent to heel of frog and concentric siding at V, the point of compound curve,

G = Gage of tracks,

Measure in the field or calculate.

$\overline{QI}$ = Distance from heel of frog measured on center line to point of intersection of frog line produced and center line ZWV produced.

$\Delta = \measuredangle LIQ$ = angle between tangent to arc $ZWVI$ at I and the frog line.

Required:

ϕ_1 = Center angle connecting curve between S and V,

ϕ = Center angle main track curve between C, the heel of frog and D, a point radially opposite V, the point of compound curve,

$\overline{QS}$ = Tangent back of heel of frog,

$\overline{CD}$ = Chord main track curve between C and D,

$\overline{SV}$ = Chord of connecting curve between S and V.

In Fig. 41. $ACDE$ = center line main, VWZ = center line concentric siding, O = center main track and siding curves, O_1 = center of connecting curve. Let C and Q be points on center line of main and turn out opposite heel of frog. Let S = point of connecting track curve. $\overline{OC}$ and $\overline{OD} = R$. Extend $\overline{OD}$ to $V = \overline{OV} = (R + P)$. Extend arc ZWV and line $\overline{QS}$ to intersect at I. Draw the radius $\overline{OI} = (R + P)$. Draw the tangent LI tangent to arc $ZWVI$ at I. Draw the radius $\overline{OS} = R_1$. Draw $OHJB \parallel$ to $\overline{QI}$ and $\perp$ to $\overline{SO_1}$ produced to J. Draw $\overline{QH}$ and $\overline{IB} \perp$ to $\overline{OB}$. Draw $O_1T \parallel$ to $\overline{OB}$, $\measuredangle SO_1V = \phi_1$, $\measuredangle UO_1V = \phi = (\phi_1 - F)$, $\measuredangle F = \measuredangle OUH$, $\measuredangle LIQ = \Delta = \measuredangle OIB$.

Measure $\overline{QI}$ and $\measuredangle \Delta$.

$$\overline{O_1J} = \overline{TB} = (\overline{IB} - \overline{IT}) = \overline{OI} \cdot \cos \measuredangle OIB - \overline{SO_1}$$
$$= (R + P) \cdot \cos \Delta - R_1.$$

$$\overline{OO_1} = \overline{OD} + \overline{DV} - \overline{O_1V} = R + P - R_1$$

$$\cos \measuredangle OO_1J = \frac{\overline{O_1J}}{\overline{OO_1}}.$$

$$\measuredangle OO_1J = \measuredangle SO_1V = \phi_1.$$

$$\therefore \quad \cos \phi_1 = \frac{(R + P) \cdot \cos \Delta - R_1}{R + P - R_1}. \tag{1}$$

$$\phi = (\phi_1 - F). \tag{2}$$

$$\overline{QS} = \overline{QI} - \overline{SI} = \overline{QI} - \frac{\overline{SS_1}}{\sin \measuredangle SIS_1}$$

$$= \overline{QI} - \frac{R_1 \sin \phi_1 - (R + P) \sin (\phi_1 - \Delta)}{\sin (90 - \phi_1)}.$$

$$\overline{QS} = \overline{QI} - \frac{R_1 \sin \phi_1 - (R + P) \cdot \sin (\phi_1 - \Delta)}{\cos \cdot \phi_1}. \tag{3}$$

$$\overline{CD} = 2 \cdot R \cdot \sin \frac{\phi}{2}. \tag{4}$$

$$\overline{SV} = 2 \cdot R_1 \cdot \sin \frac{\phi_1}{2}. \tag{5}$$

The above is true only when $R_1 = < R_1$ as determined by Problem 39. If in the office it is desired to accurately determine such a problem as given in Problem 40, the distance $\overline{QI}$ and angle Δ may be determined as follows. Extend $\overline{OU}$ to intersect QI. Call this point x. The right angle triangle XQU may be solved for $\overline{QX}$ since $\overline{QU}$ and $\angle QUX$ are known. Similarly triangle XOI has the two sides $\overline{XO}$ and $\overline{OI}$ and the angle IXO known, from which may be determined $\overline{XI}$ and $\measuredangle XIO$, then

$$\overline{QI} = \overline{QX} + \overline{XI} \quad \text{and} \quad \Delta = 90 - \measuredangle XIO.$$

Problem 41.

To lay out a concentric siding on the inside of a curved principal or main track.

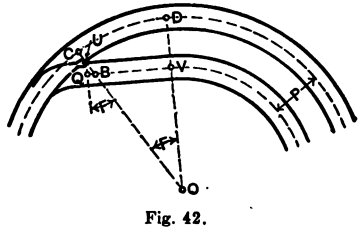

Fig. 42.

When $P = R + \frac{1}{2}(G + c) - [R - \frac{1}{2}(G + c)] \cos F$, then the center line of the frog produced is tangent to the center line of the concentric siding and $\overline{QV} = [R - \frac{1}{2}(G + c)] \cdot \sin F$ where $V =$ point of tangency of the center line of the frog line and the center line of the concentric siding and Q a point on the center line opposite the heel of the frog.

$$P = \overline{DV} = \overline{OD} - \overline{OV}.$$
$$\overline{OV} = \overline{OB} \cdot \cos F.$$
$$\overline{OB} = \overline{OC} - (\overline{CU} + \overline{UB}).$$
$$\overline{UB} = \frac{\frac{1}{2}(G + c)}{\cos F}.$$
$$\overline{OB} = R - \left[\tfrac{1}{2}(G + c) + \frac{\frac{1}{2}(G + c)}{\cos F}\right].$$
$$\overline{OV} = [R - \tfrac{1}{2}(G + c)] \cos F - \tfrac{1}{2}(G + c).$$
$$P = R - \{[R - \tfrac{1}{2}(G + c)] \cos F - \tfrac{1}{2}(G + c)\}.$$
$$= R + \tfrac{1}{2}(G + c) - [R - \tfrac{1}{2}(G + c)] \cdot \cos F$$

which is evident from inspection.

$$\overline{QV} = \overline{OB} \cdot \sin F + \overline{UB} \cdot \sin F = \overline{OU} \cdot \sin F$$
$$= [R - \tfrac{1}{2}(G + c)] \cdot \sin F.$$

Problem 42.

To lay out a concentric siding on the inside of a curved principal or main track, using a simple curve tangent to the heel of the frog and to the concentric siding. The point of tangency with the concentric siding being the point of reverse curve.

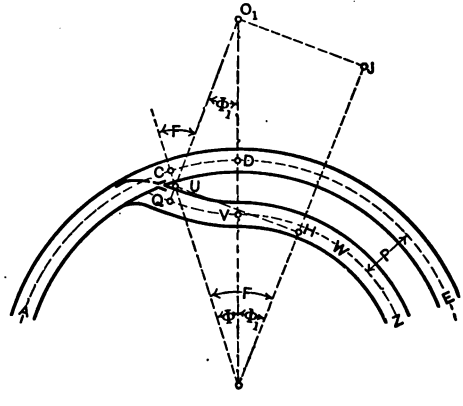

Fig. 43.

This case is possible only when

$$P < R + \tfrac{1}{2}(G + c) - [R - \tfrac{1}{2}(G + c)] \cdot \cos F.$$

Given: $ACDE$ = center line main,
R = Radius center line main,
P = Center to center tracks,

N = Frog number,
F = Frog angle,
K = Distance point to heel,
c = Spread at heel,
G = Gage of tracks,

Required: Φ = Center angle main between C and D,
Φ_1 = Center angle connecting curve,
R_1
QV
CD

In Fig. 43,

$$\overline{OC} = \overline{OD} = R,$$
$$\overline{O_1Q} = \overline{O_1V} = R_1,$$
$$\overline{DV} = P,$$
$$\overline{OO_1} = R - P + R_1,$$
$$\overline{CU} = \overline{QU} = \tfrac{1}{2}(G + c),$$

$\overline{OJ} \parallel$ to O_1Q, and $\overline{UH}$ and $\overline{Q_1J}$ are $\perp$ to $\overline{OJ}$.

$$\measuredangle QO_1O = \phi_1 = \measuredangle O_1OJ. \quad \measuredangle O_1OC = \phi. \quad \measuredangle COJ = F.$$

$$(R - \overline{CU}) \cdot \sin F = [(R - P) + R_1] \sin \phi_1.$$

$$\therefore \quad (R + \overline{CU}) \cdot \sin F - (R - P) \cdot \sin \phi_1 = R_1 \cdot \sin \phi_1. \tag{1}$$

$$(R - \overline{CU}) \cdot \cos F + (R_1 - \overline{QU}) = [(R - P) + R_1] \cos \phi_1$$

$$\therefore \quad (R - \overline{CU}) \cdot \cos F - (R - P) \cdot \cos \phi_1 - \overline{CU} = R_1 \cos \phi_1 - R_1$$
$$= - R_1 (1 - \cos \phi_1). \tag{2}$$

Multiply (1) by $(1 - \cos \phi_1)$ and (2) by $\sin \phi_1$, add and simplify.

$$[(R - P + \overline{CU}) - (R - \overline{CU}) \cdot \cos F] \cdot \sin \phi_1$$
$$+ [(R - \overline{CU}) \cdot \sin F] \cdot \cos \phi_1 = (R - \overline{CU}) \cdot \sin F. \tag{3}$$

Let

$$\tan \rho = \frac{(R - P + \overline{CU}) - (R - \overline{CU}) \cdot \cos F}{(R - \overline{CU}) \cdot \sin F}. \tag{4}$$

$$\tan \rho = \frac{[R - P + \frac{1}{2}(G + c)] - [R - \frac{1}{2}(G + c)] \cdot \cos F}{[R - \frac{1}{2}(G + c)] \cdot \sin F}. \tag{5}$$

Solve for ρ.

Let $\quad A \cdot \sin \rho = (R - P + \overline{CU}) - (R - \overline{CU}) \cdot \cos F. \quad (6)$

Let $\quad A \cdot \cos \rho = (R - \overline{CU}) \cdot \sin F. \quad (7)$

Square (6) and (7), add and solve for A

$$A^2 = \{[R - P + \tfrac{1}{2}(G + c)] - [R - \tfrac{1}{2}(G + c)] \cdot \cos F\}^2$$
$$+ \{[R - \tfrac{1}{2}(G + c)] \cdot \sin F\}^2. \tag{8}$$

Solve for A.

From (3), (6) and (7)

$$A \cdot \sin \rho \cdot \sin \phi_1 + A \cdot \cos \rho \cdot \cos \phi_1 = [R - \tfrac{1}{2}(G + c)] \cdot \sin F. \quad (9)$$

Divide (9) by A and simplify.

$$\cos(\phi_1 - \rho) = \frac{[R - \frac{1}{2}(G + c)] \cdot \sin F}{A}. \quad (10)$$

Solve for $(\phi_1 - \rho)$ and since ρ is known from solution of (5), ϕ_1 becomes known.

Then

$$\phi = (F - \phi_1). \quad (11)$$

$$\overline{CD} = 2 \cdot R \cdot \sin \frac{\phi}{2}. \quad (12)$$

From (1)

$$R_1 = \frac{[R - \frac{1}{2}(G + c)] \cdot \sin F}{\sin \phi_1} - (R - P). \quad (13)$$

$$\overline{QV} = 2 \cdot R_1 \cdot \sin \frac{\phi_1}{2}. \quad (14)$$

Problem 43.

To lay out a concentric siding on the inside of a curved principal or main track using simple curve tangent to the heel of the frog and to the concentric siding. The point of tangency with the concentric siding being a point of compound curve.

It seems this problem might be used in case the principal curve is very sharp.

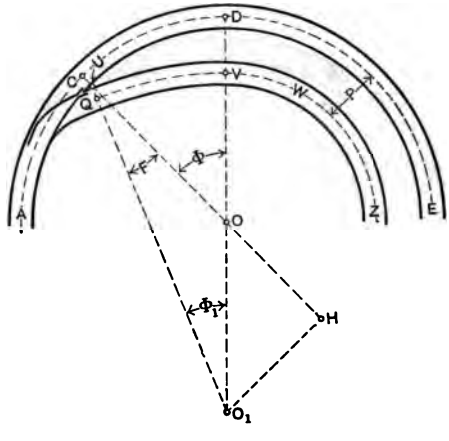

Fig. 44.

Given: $ACDE$ = Center line main,
N = Frog number,
F = Frog angle,
K = Distance point to heel,
c = Spread at heel,
G = Gage,
R = Radius center line main,
P = center to center of tracks.

Required: ϕ = Center angle main,
ϕ_1 = Center angle connecting curve,
R_1 = Radius connecting curve,
$\overline{QV}$ = Chord connecting curve,
$\overline{CD}$ = Chord main.

In Fig. 44, $\overline{OC} = \overline{OD} = R$,
$\overline{O_1Q} = \overline{O_1V} = R_1$,
$\overline{DV} = P$,
$\overline{OO_1} = R_1 - (R - P)$,
$\overline{CU} = \overline{QU} = \frac{1}{2}(G + c)$.

Extend $\overline{CO}$ to H. Draw $\overline{O_1U}$ $\perp$ to $\overline{CH}$.

$$\measuredangle OUO_1 = \measuredangle HUO_1 = F. \quad \measuredangle UO_1V = \phi_1. \quad \measuredangle COD = \phi.$$

(It will be noted that this problem is in reality the same as Problem 39, where the angles ϕ and ϕ_1 and the radii R and R_1 are interchanged and you solve for R instead of R_1.)

Solving direct by reference to Fig. 44.

$$\overline{OO_1} \cdot \sin\phi = \overline{O_1U} \cdot \sin F.$$

$$[R_1 - (R - P)] \cdot \sin\phi = (R_1 + \overline{QU}) \cdot \sin F.$$

$$-(R - P) \cdot \sin\phi - \overline{QU} \cdot \sin F = R_1 \sin F - R_1 \sin\phi,$$

divide by $\sin F$.

$$-(R - P)\frac{\sin\phi}{\sin F} - \overline{QU} = R_1\left(1 - \frac{\sin\phi}{\sin F}\right). \tag{1}$$

$$\overline{OO_1} \cdot \cos\phi = \overline{O_1U} \cdot \cos F - (R - \overline{CU}) = \overline{O_1U} \,.\, \cos F - (R - \overline{QU})$$

$$[R_1 - (R - P)] \cdot \cos\phi = (R_1 + \overline{QU}) \cdot \cos F - (R - \overline{QU})$$

$$(R - \overline{QU}) - (R - P) \cdot \cos\phi - \overline{QU} \cdot \cos F = R_1 \cos F - R_1 \cos\phi$$

Divide by $\cos F$.

$$\frac{(R - \overline{QU})}{\cos F} - (R - P)\frac{\cos\phi}{\cos F} - \overline{QU} = R_1\left(1 - \frac{\cos\phi}{\cos F}\right). \tag{2}$$

Multiply (1) by $\left(1 - \frac{\cos\phi}{\cos F}\right)$ and (2) by $\left(1 - \frac{\sin\phi}{\sin F}\right)$ and subtract (1) from (2) and simplify.

$$\left[\frac{R - P + \overline{QU}}{\sin F} - \frac{R - \overline{QU}}{\sin F \cos F}\right] \sin\phi - \frac{R - P + \overline{QU}}{\cos F} \cdot \cos\phi$$
$$= -\frac{R - \overline{QU}}{\cos F}.$$

Multiply both sides by $-\sin F \cos F$.

$$[(R - \overline{QU}) - (R - P + \overline{QU}) \cdot \cos F] \cdot \sin\phi + (R - P + \overline{QU}) \sin F \cos\phi = (R - \overline{QU}) \sin F. \tag{3}$$

$$\text{Let } \tan\rho = \frac{(R - \overline{QU}) - (R - P + \overline{QU}) \cdot \cos F}{(R - P + \overline{QU}) \cdot \sin F}. \tag{4}$$

$$\tan\rho = \frac{[R - \frac{1}{2}(G + c)] - [R - P + \frac{1}{2}(G + c)] \cdot \cos F}{[R - P + \frac{1}{2}(G + c)] \cdot \sin F}. \tag{5}$$

Solve (5) for ρ.

$$\text{Let } A \sin\rho = (R - \overline{QU}) - (R - P + \overline{QU}) \cdot \cos F. \tag{6}$$
$$\text{Let } A \cos\rho = (R - P - \overline{QU}) \cdot \sin F. \tag{7}$$

Square (6) and (7) and simplify.

$$A^2 = \{[R - \tfrac{1}{2}(G + c)] - [R - P + \tfrac{1}{2}(G + c)] \cdot \cos F\}^2 + \{[R - P - \tfrac{1}{2}(G + c)] \cdot \sin F\}^2. \tag{8}$$

Solve for A.

From (3) (6) and (7).

$A \sin\rho \sin\phi + A \cos\rho \cos\phi = (R - \overline{QU}) \sin F.$

Divide both sides by A and simplify.

$$\cos(\phi - \rho) = \frac{[R - \frac{1}{2}(G + c)] \cdot \sin F}{A}. \tag{9}$$

Solve for $(\phi - \rho)$ and since ρ is known from the solution of (5), ϕ is known, then

$$\phi_1 = (\phi - F). \tag{10}$$

From equation (1).

$$R_1 = \frac{(R - P) \sin\phi + \frac{1}{2}(G + c) \cdot \sin F}{\sin\phi - \sin F}. \tag{11}$$

$$\overline{QV} = 2 \cdot R_1 \cdot \sin\frac{\phi_1}{2}. \tag{12}$$

$$\overline{DC} = 2 \cdot R \cdot \sin\frac{\phi}{2}. \tag{13}$$

Problem 44.

To lay out a concentric siding on the inside of a principal or main track, using a reverse curve tangent to the heel of the frog and to the concentric siding. The point of tangency with the concentric siding being also a point of reverse curve.

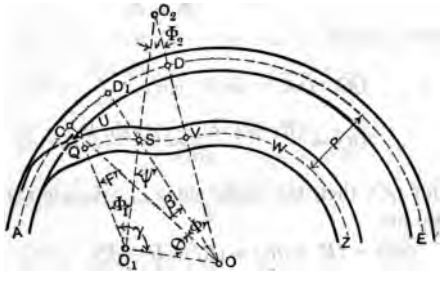

Fig. 45.

By this method the clearance distance may be most quickly attained.

Given: $ACDE$ = Center line main,
R = Radius center line main,
N = Number of frog,
K = Distance point to heel of frog,
c = Spread of frog at heel,
G = Gage of tracks,
P = center to center of tracks.

Assume: R_1 = Radius center line of curve tangent to heel of frog = Radius center line of lead curve,
R_2 = Radius center line of curve tangent to concentric siding = $(R - P)$.

Required: β, ϕ, ϕ_1, ϕ_2, $\overline{CD_1}$, $\overline{D_1S}$, $\overline{D_1D}$ or $\overline{CD}$, $\overline{QS}$ and $\overline{SV}$.

O = Center of main track curve. O_1 = Center of curve tangent to heel of frog and reversed at S. O_2 = Center of curve tangent to concentric siding at V and reversed at S and V.

$R = \overline{OC} = \overline{OD} = \overline{OD_1}$, $R_1 = \overline{O_1Q} = \overline{O_1S}$, $R_2 = (R - P) = \overline{OV} = \overline{O_2S} = \overline{O_2V}$, $P = \overline{DV}$, $\measuredangle OUO_1 = F$, $\measuredangle COD_1 = \beta$, $\measuredangle COD = \phi$, $\measuredangle UO_1O_2 = \phi_1$, $\measuredangle O_1O_2O = \phi_2$, $\measuredangle O_1OC = \theta$, $\measuredangle UO_1O = \gamma$, $\measuredangle D_1OD = (\phi - \beta)$, $\measuredangle O_2O_1O = (\gamma - \phi_1)$, $\overline{CU} = \overline{QU} = \frac{1}{2}(G + c)$, $(F + \phi_1) = (\phi + \phi_2)$.

$$\frac{(\overline{OC}-\overline{UC})+(\overline{O_1Q}+\overline{QU})}{(\overline{OC}-\overline{UC})-(\overline{O_1Q}+\overline{QU})}=\frac{\tan\frac{1}{2}(\gamma+\theta)}{\tan\frac{1}{2}(\gamma-\theta)}$$

but $\quad (\gamma+\theta)=(180-F).$

$$\therefore\ \tan\tfrac{1}{2}(\gamma-\theta)=\frac{[R-(R_1+G+c)]\cdot\tan\frac{1}{2}(180-F)}{R+R_1}. \qquad (1)$$

Solve for γ and θ.

$$\overline{OO_1}:\overline{O_1C}::\sin F:\sin\theta.$$

$$\overline{OO_1}=\frac{[R_1+\frac{1}{2}(G+c)]\cdot\sin F}{\sin\theta}. \qquad (2)$$

Solve for $\overline{OO_1}$ then the three sides of triangle $O_1O_2OO_1$ are known and are

$$\overline{O_1O_2}=(R_1+R_2)=(R_1+R-P),$$
$$\overline{O_2O}=2\,R_2=2\,(R-P) \text{ and } \overline{OO_1}.$$

Letting $\quad s=\dfrac{\overline{O_1O_2}+\overline{O_2O}+\overline{OO_1}}{2}$

and $\quad r=\sqrt{\dfrac{(s-\overline{O_1O_2})\,(s-\overline{O_2O})\,(s-\overline{OO_1})}{s}}$

we have

$$\tan\frac{1}{2}(\theta+\phi)=\frac{r}{s-(R_1+R_2)}. \qquad (3)$$

$$\tan\frac{1}{2}(\gamma-\phi_1)=\frac{r}{s-2\,R_2}. \qquad (4)$$

$$\tan\frac{1}{2}\phi_2=\frac{r}{s-\overline{OO_1}}. \qquad (5)$$

Since θ and γ have been determined by equation (1), ϕ and ϕ_1 are known from solution of equations (3) and (4) and $\phi_2=F+\phi_1-\phi$. It is not necessary to solve equation (5) except as a check since $(\gamma-\phi_1)+(\theta+\phi)+\phi_2=180$.

With the above information the siding may be staked out. However, it may be convenient to also know the following terms:

$$\frac{\overline{O_1S}+\overline{OO_1}}{\overline{O_1S}-\overline{OO_1}}=\frac{\tan\frac{1}{2}[\psi+(\theta+\beta)]}{\tan\frac{1}{2}[\psi-(\theta+\beta)]},$$

but $\quad [\psi+(\theta+\beta)]=180-(\gamma-\phi_1)].$

$$\therefore \tan\frac{1}{2}[\psi - (\theta + \beta)] = \frac{(R_1 - \overline{OO_1}) \cdot \tan \frac{1}{2}[180 - (\gamma - \phi_1)]}{R_1 + \overline{OO_1}}. \quad (6)$$

Solve for ψ and β.

$$\overline{CD_1} = 2 \cdot R \cdot \sin\frac{\beta}{2}. \quad (7)$$

$$\overline{OS} : \overline{O_1S} :: \sin(\gamma - \phi_1) : \sin(\theta + \beta).$$

$$\overline{OS} = \frac{R_1 \cdot \sin(\gamma - \phi_1)}{\sin(\theta + \beta)}.$$

$$\overline{D_1S} = R - \overline{OS} = R - \frac{R_1 \sin(\gamma - \phi_1)}{\sin(\theta + \beta)}. \quad (8)$$

$$\overline{D_1D} = 2 \cdot R \cdot \sin\frac{\phi - \beta}{2}. \quad (9)$$

$$\overline{CD} = 2 \cdot R \cdot \sin\frac{\phi}{2}. \quad (10)$$

$$\overline{QS} = 2 \cdot R_1 \cdot \sin\frac{\phi_1}{2}. \quad (11)$$

$$\overline{SV} = 2 \cdot R_1 \cdot \sin\frac{\phi_2}{2}. \quad (12)$$

CHAPTER VII

Crossings

Problem 45.

To determine the frog angles and length of rail between frog points for a crossing of two straight tracks. All angles are equal and equal to Δ *and* $\overline{AB} = \overline{BC} = \overline{CD} = \overline{DA} = \dfrac{G}{\sin \Delta}$ as seen from Fig. 46.

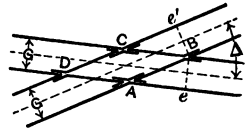

Fig. 46.

Problem 46.

To determine the angles of the crossing frogs and the length of rail between the frog points for a crossing of a straight and a curved track.

Given: The center lines of the given tracks,
R = Radius of center line curved track,
G = Gage of both tracks.

Measure in the field:

$\Delta = \measuredangle HEJ$ = angle between center line of straight track and the tangent to the curved track at the point of intersection E.

Required: α, β, γ, δ, the angles of the crossing frogs.
$\overline{AB}$ and $\overline{CD}$ = distance between points of frogs A and B and C and D.
Arcs $\overline{BC}$ and $\overline{DA}$ = distance between points of frogs B and C, and D and A.

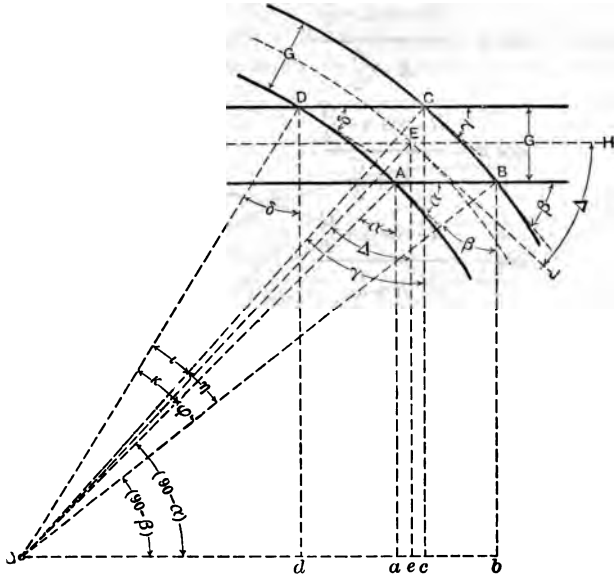

Fig. 47.

In Fig. 47, let O = center of curved track. Let E = point of intersection of center lines of given tracks. Let A, B, C, and D represent the points of the frogs. Draw $\overline{OE} = R$ and draw $\overline{OA} = \overline{OD} = \left(R - \frac{G}{2}\right)$ and $\overline{OB} = \overline{OC} = \left(R + \frac{G}{2}\right)$. Draw $\overline{EJ}$ tangent to center line of curved track at E, then $\measuredangle HEJ = \Delta$. Draw $\overline{Ob} \parallel$ to EH. Drop $\perp$s from E, A, B, C, D upon $\overline{Ob}$ at e, a, b, c and d respectively, then $\measuredangle OEe = \Delta$, $\measuredangle OAa = \alpha$, $\measuredangle OBb = \beta$, $\measuredangle OCc = \gamma$ and $\measuredangle ODd = \delta$.

$$\overline{Ee} = R \cdot \cos \Delta.$$

$$\overline{Aa} = \overline{Bb} = \left(\overline{Ee} - \frac{G}{2}\right).$$

$$\overline{Cc} = \overline{Dd} = \left(\overline{Ee} + \frac{G}{2}\right)$$

$$\therefore \quad \cos\alpha = \frac{R\cdot\cos\Delta - \frac{G}{2}}{R - \frac{G}{2}}. \tag{1}$$

$$\cos\beta = \frac{R\cdot\cos\Delta - \frac{G}{2}}{R + \frac{G}{2}}. \tag{2}$$

$$\cos\gamma = \frac{R\cdot\cos\Delta + \frac{G}{2}}{R + \frac{G}{2}}. \tag{3}$$

$$\cos\delta = \frac{R\cdot\cos\Delta + \frac{G}{2}}{R - \frac{G}{2}}. \tag{4}$$

$$\varphi = (90 - \alpha) - (90 - \beta) = (\beta - \alpha). \tag{5}$$

$$\eta = (\beta - \gamma). \tag{6}$$

$$\iota = (\gamma - \delta). \tag{7}$$

$$\kappa = (\alpha - \delta). \tag{8}$$

$$\overline{AB} : \overline{OA} :: \sin\varphi : \sin(90 - \beta),$$

or

$$\overline{AB} = \overline{ob} - \overline{oa} = \left(R + \frac{G}{2}\right)\cdot\sin\beta - \left(R - \frac{G}{2}\right)\cdot\sin\alpha.$$

$$\overline{AB} = \frac{\left(R - \frac{G}{2}\right)\cdot\sin\varphi}{\cos\beta} = \left(R + \frac{G}{2}\right)\cdot\sin\beta - \left(R - \frac{G}{2}\right)\sin\alpha. \tag{9}$$

$$\overline{BC} : 2\pi\left(R + \frac{G}{2}\right) :: \eta : 360,$$

where η is expressed in degrees and decimals.

$$\overline{BC} = 0.017453\left(R + \frac{G}{2}\right)\cdot\eta. \tag{10}$$

$$\overline{CD} = \frac{\left(R - \frac{G}{2}\right)\cdot\sin\iota}{\cos\gamma} = \left(R + \frac{G}{2}\right)\cdot\sin\gamma - \left(R - \frac{G}{2}\right)\cdot\sin\delta. \tag{11}$$

$$\overline{DA} = 0.017453\left(R - \frac{G}{2}\right)\cdot\kappa. \tag{12}$$

Problem 47.

To determine the angles of the crossing frogs and the length of rail between the frog points for the crossing of two curved tracks.

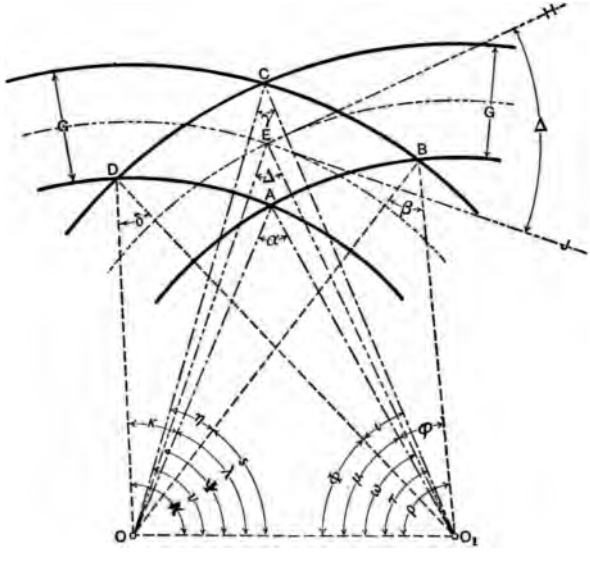

Fig. 48

Given the center lines of the given curves intersecting at E,

R and R_1 = Radii of center lines of given curves,

G = Gage of tracks.

Measure in the field:

$\Delta = \measuredangle HEJ$ = angle between the tangents to the given curves at E.

Required:

$\alpha, \beta, \gamma, \delta,$ = frog angles,

$\varphi, \eta, \iota, \kappa$ = center angles.

Arcs $\overline{AB}$, $\overline{BC}$, $\overline{CD}$, $\overline{DA}$ = distances between frog points.

In Fig. 48, let O and O_1 be the centers of the given curves, E = point of intersection of center lines of given curves, EH and EJ = tangents to given curves at E, $\measuredangle HEJ = \Delta$.

Let A, B, C and D = the points of the crossing frogs. Draw

$$\overline{OE} = R,\ \overline{O_1E} = R_1,\ \overline{OD} = \overline{OA} = \left(R - \frac{G}{2}\right),$$

$$\overline{OC} = \overline{OB} = \left(R + \frac{G}{2}\right),\ \overline{O_1A} = \overline{O_1B} = \left(R_1 - \frac{G}{2}\right),$$

$$\overline{O_1D} = \overline{O_1C} = \left(R_1 + \frac{G}{2}\right).$$

Join $\overline{OO_1}$. $\measuredangle OEO_1 = \measuredangle HEJ = \Delta$.

In triangle OEO_1O two sides and the included angle are known.

Solve for $\measuredangle EOO_1 = \psi$, $\measuredangle EO_1O = \omega$ and side $\overline{OO_1}$.

$$\frac{R + R_1}{R - R_1} = \frac{\tan \frac{1}{2}(\omega + \psi)}{\tan \frac{1}{2}(\omega - \psi)}. \quad \text{But } (\omega + \psi) = (180 - \Delta).$$

$$\therefore \quad \tan \tfrac{1}{2}(\omega - \psi) = \frac{(R - R_1) \cdot \tan \frac{1}{2}(180 - \Delta)}{R + R_1}. \tag{1}$$

Solve for ω and ψ.

$\overline{OO_1} : R :: \sin \Delta : \sin \omega$.

$$\overline{OO_1} = \frac{R \cdot \sin \Delta}{\sin \omega}. \tag{2}$$

Solve for $\overline{OO_1}$.

In triangle OAO_1O all three sides are known, namely,

$$\overline{OA} = \left(R - \frac{G}{2}\right),\ \overline{AO_1} = \left(R_1 - \frac{G}{2}\right) \text{ and } \overline{OO_1}.$$

Solve for $\measuredangle OO_1A = \mu$, $\measuredangle AOO_1 = \lambda$ and $\measuredangle OAO_1 = \alpha$.

$$\text{Let } S = \frac{\left(R - \frac{G}{2}\right) + \left(R_1 - \frac{G}{2}\right) + \overline{OO_1}}{2} = \frac{R + R_1 + \overline{OO_1} - G}{2}.$$

$$\text{Let } r = \sqrt{\frac{\left[S - \left(R - \frac{G}{2}\right)\right] \cdot \left[S - \left(R_1 - \frac{G}{2}\right)\right] \cdot (S - \overline{OO_1})}{S}}.$$

Then

$$\tan \frac{\mu}{2} = \frac{r}{S - \left(R - \frac{G}{2}\right)}. \tag{3}$$

$$\tan \frac{\lambda}{2} = \frac{r}{S - \left(R_1 - \frac{G}{2}\right)} \tag{4}$$

$$\tan\frac{\alpha}{2}=\frac{r}{S-\overline{OO_1}}. \tag{5}$$

Solve for μ, λ and α.

In triangle OBO_1O the three sides are known, namely,

$$\overline{OB}=\left(R+\frac{G}{2}\right),\ \overline{BO_1}=\left(R_1-\frac{G}{2}\right) \text{ and } \overline{OO_1}.$$

Solve for $\measuredangle OO_1B=\rho$, $\measuredangle BOO_1=s$ and $\measuredangle OBO_1=\beta$.

$$\text{Let } S_1=\frac{\left(R+\frac{G}{2}\right)+\left(R_1-\frac{G}{2}\right)+\overline{OO_1}}{2}=\frac{R+R_1+\overline{OO_1}}{2}$$

$$\text{and } r_1=\sqrt{\frac{\left[S_1-\left(R+\frac{G}{2}\right)\right]\cdot\left[S_1-\left(R_1-\frac{G}{2}\right)\right]\cdot(S_1-\overline{OO_1})}{S_1}}.$$

Then
$$\tan\frac{\rho}{2}=\frac{r_1}{S_1-\left(R+\frac{G}{2}\right)}. \tag{6}$$

$$\tan\frac{s}{2}=\frac{r_1}{S_1-\left(R_1-\frac{G}{2}\right)}. \tag{7}$$

$$\tan\frac{\beta}{2}=\frac{r_1}{S_1-\overline{OO_1}}. \tag{8}$$

Solve for ρ, s, and β.

In triangle OCO_1O the three sides are known, namely,

$$\overline{OC}=\left(R+\frac{G}{2}\right),\ \overline{CO_1}=\left(R_1+\frac{G}{2}\right) \text{ and } \overline{OO_1}.$$

Solve for $\measuredangle OO_1C=\tau$, $\measuredangle COO_1=v$ and $\measuredangle OCO_1=\gamma$.

$$\text{Let } S_2=\frac{\left(R+\frac{G}{2}\right)+\left(R_1+\frac{G}{2}\right)+\overline{OO_1}}{2}=\frac{R+R_1+G+\overline{OO_1}}{2}.$$

$$\text{and } r_2=\sqrt{\frac{\left[S_2-\left(R+\frac{G}{2}\right)\right]\cdot\left[S_2-\left(R_1+\frac{G}{2}\right)\right]\cdot(S_2-\overline{OO_1})}{S_2}}.$$

Then
$$\tan\frac{\tau}{2}=\frac{r_2}{S_2-\left(R+\frac{G}{2}\right)}. \tag{9}$$

$$\tan\frac{v}{2} = \frac{r_2}{S_2 - \left(R_1 + \frac{G}{2}\right)}. \tag{10}$$

$$\tan\frac{\gamma}{2} = \frac{r_2}{S_2 - \overline{OO_1}}. \tag{11}$$

Solve for ν, v and γ.

In triangle ODO_1O the three sides are known, namely,

$$\overline{OD} = \left(R - \frac{G}{2}\right),\ \overline{DO_1} = \left(R_1 + \frac{G}{2}\right) \text{ and } \overline{OO_1}.$$

Solve for $\measuredangle OO_1D = \varphi$, $\measuredangle DOO_1 = \chi$ and $\measuredangle ODO_1 = \delta$.

Let $$S_3 = \frac{R + R_1 + \overline{OO_1}}{2} = S_1$$

and let $$r_3 = \sqrt{\frac{\left[S_1 - \left(R - \frac{G}{2}\right)\right]\cdot\left[S_1 - \left(R_1 + \frac{G}{2}\right)\right]\cdot(S_1 - \overline{OO_1})}{S_1}}.$$

Then $$\tan\frac{\varphi}{2} = \frac{r_3}{S_1 - \left(R - \frac{G}{2}\right)}. \tag{12}$$

$$\tan\frac{\chi}{2} = \frac{r_3}{S_1 - \left(R_1 + \frac{G}{2}\right)}. \tag{13}$$

$$\tan\frac{\delta}{2} = \frac{r_3}{S_1 - \overline{OO_1}}. \tag{14}$$

Solve for φ, χ and δ.

Angle of frog at $A = \alpha$, obtained from equation (5).
Angle of frog at $B = \beta$, obtained from equation (8).
Angle of frog at $C = \gamma$, obtained from equation (11).
Angle of frog at $D = \delta$, obtained from equation (14).

$$\varphi = (\rho - \mu). \tag{15}$$

$$\eta = (v - s). \tag{16}$$

$$\iota = (r - \varphi). \tag{17}$$

$$\kappa = (\chi - \lambda). \tag{18}$$

$$\text{Arc } \overline{AB} = 0.017453 \cdot \left(R_1 - \frac{G}{2}\right)\cdot \varphi. \tag{19}$$

$$\text{Arc } \overline{BC} = 0.017453 \cdot \left(R + \frac{G}{2}\right)\cdot \eta. \tag{20}$$

$$\text{Arc } \overline{CD} = 0.017453 \cdot \left(R_1 + \frac{G}{2}\right)\cdot \iota. \tag{21}$$

$$\text{Arc } \overline{DA} = 0.017453 \cdot \left(R - \frac{G}{2}\right) \cdot \kappa. \tag{22}$$

As may be seen by inspection of the following figures 49 and 50, Problem 47 is entirely general and will cover any case

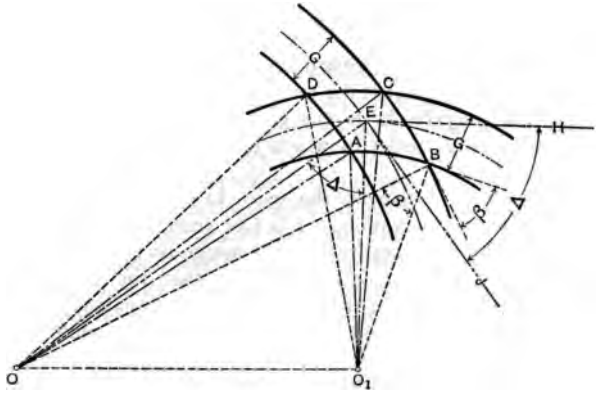

Fig 49.

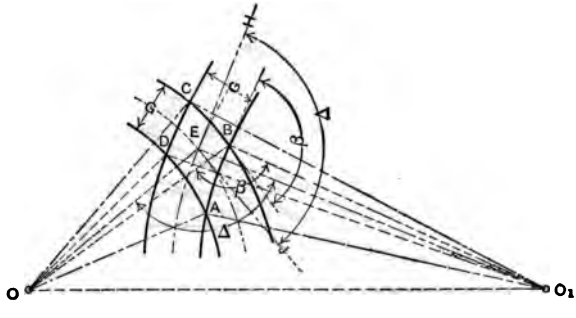

Fig. 50.

of the crossing of two simple curves. The following cautions must be carefully observed. *First: Always read the angle HEJ = Δ between the inside of one and the outside of the other of the given curves.* Second: *The angles of the crossing frogs α, β, γ, δ are always given in the same manner, i.e., between the inside of one and the outside of the other of the given curves.*

CHAPTER VIII

Ladder Tracks

The parallel tracks of a yard upon which the cars stand or are stored or upon which the trains are made up are usually termed the body tracks of the yard. The tracks at either end of the body tracks to which they connect are termed the ladder tracks.

Depending on judgment, the space to be occupied or the idea of economic operation, the ladder tracks are planed to make with the body tracks the frog angle, or twice or three times the frog angle or an angle greater than the frog angle but less than twice the frog angle. The last-named angle is chosen so that there will be a predetermined minimum distance between the point of each successive frog on the ladder.

The discussion of ladder tracks will be arranged in the above order.

Problem 48.

To determine the distance point to point of frogs on a ladder track making the frog angle with the body tracks.

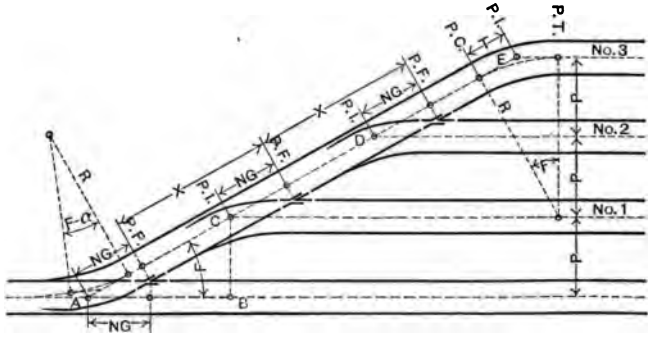

Fig. 51.

In Fig. 51 C, D are points on center line of ladder track. A, B, No. 1, etc., are the body tracks. Extend $\overline{CD}$ to inter-

sect the center line AB and the center line of No. 3 at A and E. $\measuredangle BAE = F$. P = distance center to center of tracks. $\overline{AC} = \overline{CD} = \overline{DE} = x = \frac{\overline{CB}}{\sin F} = \frac{P}{\sin F}$. The radius of the curve connecting No. 3 with the ladder is usually made equal to R of the lead curve. $T = R \cdot \tan \frac{F}{2}$.

MINIMUM DISTANCE BETWEEN SWITCH POINTS

In the ladder problems that follow it is necessary to determine the minimum permissible distance between the points of switches of successive turnouts before proceeding with the plan of the ladder. As regards this minimum distance, which we may call M, practice differs. Thus M may be equal to the lead, plus the distance from the point to the heel of the frog, plus a sufficient distance to permit the application of the angle bar to the heel of the frog and the bending of the stock rail for the next succeeding switch rail. With a 24-inch angle bar, this last distance may be as small as 2 feet, which would make $M = (L + K + 2)$.

Again some claim that the switch points should be a sufficient distance apart so that the switch points of any turnout will clear the standard switch ties of the next preceding turnout. As the switch ties should extend to a point beyond which cross ties may be used without lapping, the distance from the point of frog to the end of the switch ties will very closely approximate $N\,(t - G)$, where N = number of frog; t = length of cross tie; and G = gage of track. Therefore, in this case $M = L + N\,(t - G)$. The difference in this practice may be more clearly shown from an actual example. Take track (cross) ties 8′ 6″, a No. 7 frog, 12′ switch rails, 5″ heel distance, K = distance point to heel of frog = 8′ 0″, L = lead = 58′ 4″, then M will be equal to

(1) $M = (L + K + 2) = 58.33 + 8 + 2 = 68.33.$

(2) $M = L + N\,(t - G) = 58.33 + 7\,(8.5 - 4.71) = 58.33 + 26.53 = 84.86.$

With the frogs and leads recommended by the American Railway Engineering and Maintenance of Way Association. $N = 7$, $K = 8'\ 1''$, Length of switch rail = 16′ 6″, Heel distance = 0′ 6¼″, L = 61′ 9¾″ and using 8′ 6″ cross ties and a 36″ angle bar

(1) $M = (L + K + 2.5) = 61.81 + 8.08 + 2.5 = 72.39.$

(2) $M = L + N\,(t - G) = 61.81 + 26.53 = 88.34.$

The claim for the second method is that it avoids the use of special switch ties.

The claims for the first method are: It concentrates (bunches) the switches, which is desirable; it economizes space; in case of a ladder having one turnout on the ladder for each two body tracks, it makes possible, by the use of a special, not very expensive connecting rod, the placing of all switch stands on the same side of the ladder, making unnecessary the crossing of tracks by switchmen ahead of approaching cuts of cars; in obtaining the clearance distance necessary for the connecting curves, it makes all the difference between "can" and "can't" in the employment of certain space-saving combinations of turnouts in ladder design.

In whatever manner M may be determined it is important in making track plans that the designer clearly recognize the fact that *if M is stated to be the minimum distance between points of switches, it is also the minimum distance between points of frogs, and also the minimum distance between the points of intersection of the center lines parallel to the point rails of the successive frogs,* as shown diagrammatically in Fig. 52.

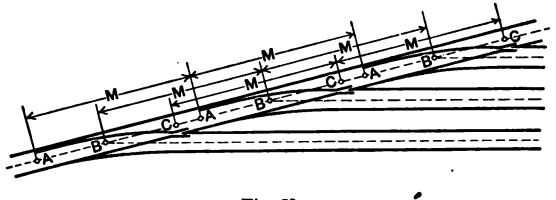

Fig. 52.

A, A, A = points of switches; C, C, C = points of frogs. B, B, B = points of intersection of center lines ‖ to point rails of successive frogs. $\overline{AA} = \overline{CC} = \overline{BB} = M$.

In any arrangement of turnouts for connecting ladder tracks to the body tracks where the ladders make two or three times the frog angle with the body tracks, and where there is one frog on the ladder for each two or three body tracks respectively, there are two distinct problems, first to locate the frogs on the ladder to make connection with the

body tracks, and, second, to locate the frog in the drill track to connect with the ladder.

Problem 49.

To locate the frogs on a ladder where the ladder makes twice the frog angle with the body tracks and where there is one frog on the ladder for each two body tracks.

In Fig. 53 the heavy solid lines represent the center lines of the tracks. The light solid lines represent the rails. EC = center line of the ladder track; IJ and DO the center lines of two body tracks to be connected with the ladder; EI the center line of the connecting track. Extend OD to intersect EC at C. From C drop a $\perp$ on EI at H. x = the distance from the point of intersection of OD extended with EC to the point of frog on the ladder. $\measuredangle QCD = 2F$, $\measuredangle CED = \measuredangle CDE = \measuredangle IDO = F$, $\overline{ED} = M$, $EH = HD = \frac{M}{2}$,

$$\overline{EC} = \overline{CD} = (NG + x),$$

$$\overline{EC} = \frac{\overline{EH}}{\cos. \measuredangle CED} = \frac{M}{2 \cos F},$$

$$x = \frac{M}{2 \cos F} - NG.$$

The location of the frog in EI to connect DO is evident from inspection of the figure.

It is obvious that the distance between each succeeding frog on the ladder will be $\frac{2P}{\sin 2F}$.

Problem 50.

To locate the frogs on a ladder where the ladder makes three times the frog angle with the body tracks and where there is one frog on the ladder for each three body tracks.

Refer to Fig. 53. The heavy dotted and solid lines represent the center lines of the tracks. The light dotted and solid lines represent the rails.

AY = center line of ladder; QS, IJ and DO = center lines of three body tracks to be connected with the ladder. AQ and EI = center lines of the connecting tracks. Extend OD to intersect AQ at C and AY at B. $\measuredangle YBO = 3F$, $\measuredangle BCA = \measuredangle QCD = 2F$, $\measuredangle BAC = \measuredangle CED = \measuredangle CDE = \measuredangle IDO = F$. $\overline{AE} = \overline{ED} = M$.

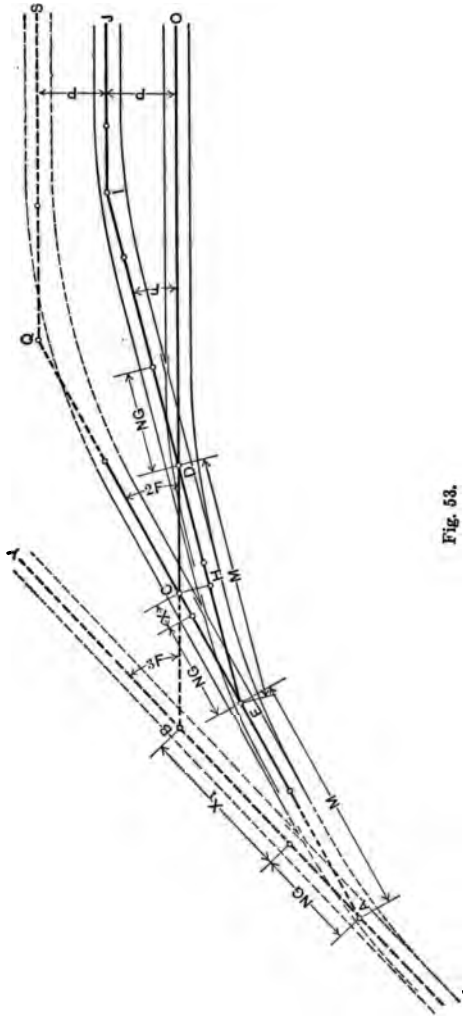

Fig. 53.

As before,

$$\overline{EC} = \frac{M}{2\cos F}. \tag{1}$$

$$x = \overline{EC} - NG \tag{2}$$

Now $\overline{AC} = \overline{AE} + \overline{EC} = M + \dfrac{M}{2\cos F}$.

$$\overline{AB} = (NG + x_1).$$

$$\overline{AB} : \overline{AC} :: \sin \measuredangle BCA : \sin \measuredangle ABC.$$

$$\overline{AB} = \frac{\overline{AC} \cdot \sin \measuredangle BCA}{\sin \measuredangle ABC} = \frac{\overline{AC} \cdot \sin \measuredangle BCA}{\sin \measuredangle YBO}$$

$$= \frac{\left(M + \dfrac{M}{2\cos F}\right)\sin 2F}{\sin 3F}$$

$$= M\frac{\sin 2F + \sin F}{\sin 3F}.$$

Since it is necessary to calculate $\overline{EC} = \dfrac{M}{2\cos F}$, the most convenient working expression for $\overline{AB}$ is

$$\overline{AB} = (M + \overline{EC})\frac{\sin 2F}{\sin 3F}. \tag{3}$$

Then

$$x_1 = (M + \overline{EC})\frac{\sin 2F}{\sin 3F} - NG. \tag{4}$$

From inspection of the figure the location of the frog in EI to connect DO is evident.

The distance between each succeeding frog on the ladder is clearly $\dfrac{3P}{\sin 3F}$.

Problem 51, Case 1.

To connect a ladder track to the drill track where the ladder track makes twice the frog angle with the body tracks.

In Fig. 54, the extension of BA forms the drill track. If the location of the first frog in the drill or No. 1 is fixed, measure NG from the point of frog to A. At A lay off the angle $BAC = F$. Extend AC to intersect No. 3 and No. 4. The location of the frog from AC extended into No. 3 is obvious, as is the termination of the extended line of AC in track No. 4. Make $\overline{AC} = M$. At C lay off CQ, making the angle F with AC. Measure NG from C on either CQ or AC extended to locate

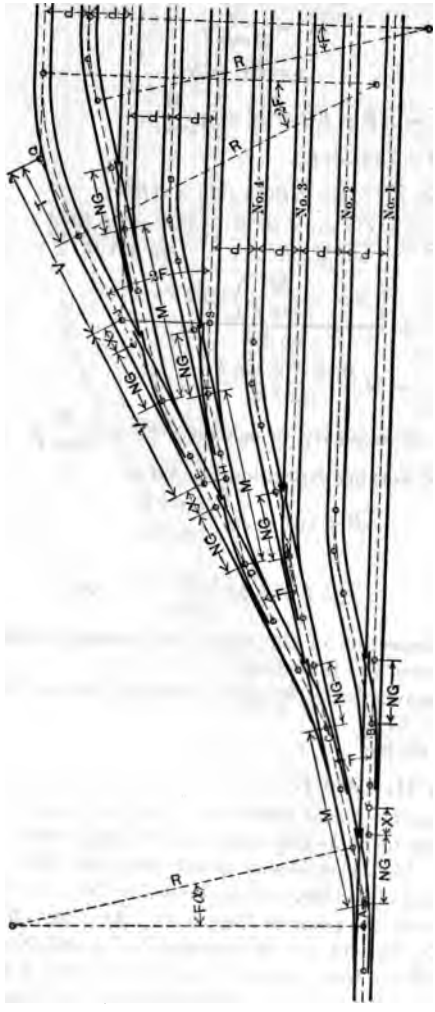

Fig. 54.

the frog into the ladder CQ. The remaining frogs in CQ are located as given in Problem 49. Track No. 2 is taken out of track No. 1, and the distance AB should preferably be not less than $\frac{P}{\sin F}$. $V = EJ = \frac{JS}{\sin \measuredangle JES} = \frac{2P}{\sin 2F}$.

If the location of QC is fixed, extend QC to intersect the drill or No. 1. From this intersection to A is $\frac{M}{2 \cos F}$. From A proceed as before.

Problem 51, Case 2.

To connect a ladder track to the drill track by means of a simple curve tangent to the toe of the first frog on the ladder and to the heel of the frog in the drill, where the ladder track makes twice the frog angle with the drill and body tracks.

In Fig. 55, B, D, C are points on the center line of the ladder. Extend the center line of track No. 3 to intersect the center line of the ladder at C. Extend CB to intersect the center line of the drill or No. 1 at I. Make EQ equal to M. Then from Problem 49,

$$\overline{CE} = \frac{M}{2 \cos F}. \tag{1}$$

$$x = \overline{CD} = \overline{CE} - \overline{DE} = \overline{CE} - NG. \tag{2}$$

$$\overline{CI} = V = \frac{2P}{\sin 2F}. \tag{3}$$

$$BI = (\overline{BI_1} + \overline{I_1I}) = (\overline{CI} - \overline{CD} - \overline{DB}) = V - (X + W). \tag{4}$$

W = distance point to toe of frog = $\overline{DB}$.

$T_2 = \overline{BI_1} = \overline{I_1H}$ = tangent distance to connecting curve.

From Problem 14, equation (8),

$$T_2 = \frac{\overline{BI} \cdot \sin 2F - (NG+K) \sin F}{\sin 2F + \sin F} = \frac{2 \cdot \overline{BI} \cdot \cos F - (NG+K)}{2 \cos F + 1}. \tag{5}$$

$$x_1 = \frac{(NG + K + T_2) \sin F}{\sin 2F} - NG = \frac{(NG + K + T_2)}{2 \cos F} - NG. \tag{6}$$

$$R_2 = T_2 \cdot \cot \frac{F}{2}. \tag{7}$$

$$D = 2 \cdot \sin^{-1} \frac{50}{R_2}. \tag{8}$$

$\overline{AJ}$ should preferably be not less than $\frac{P}{\sin F}$.

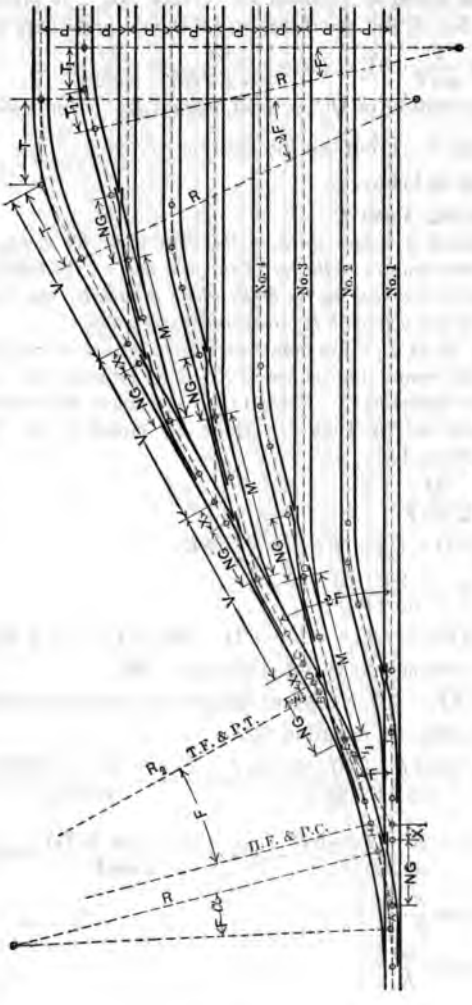

Fig. 55.

Problem 52.

To connect a ladder track to the drill track where the ladder track makes three times the frog angle with the drill and body tracks.

In Fig. 56, BA extended is the drill track. If the location of the first frog in the drill track or No. 1 is fixed, measure a distance NG from the point of the frog to A. Lay off AD, making the angle F with AB. Extend AD to intersect the center line of track No. 4. Take a turnout out of AD extended to connect track No. 5. From A measure $\overline{AC} = M$. At C draw CT, making the angle F with AD and the angle $2F$ with AB. Extend CT to intersect track No. 8. Take tracks No. 6 and No. 7 out of CT by Problem 49. From C along CT measure $\overline{CE} = M$. At E lay off EI, making the angle F with CT, the angle $2\,F$ with AD and the angle $3\,F$ with AB.

EI is the ladder. Locate the frog on the ladder to connect tracks No. 9, No. 10 and No. 11 by Problem 50. Take the connection for No. 2 and No. 3 out of No. 1.

If there were more body tracks, say No. 13, No. 14 and No. 15, then Nos. 12, 13 and 14 would be connected to the ladder just as Nos. 9, 10 and 11 are, and the distance between the successive frogs on the ladder is $\frac{3\,P}{\sin 3\,F}$.

Ordinarily it would not be practicable to connect more than eight or nine body tracks to a ladder and one drill track. In case there were 15 to 17 body tracks they would be divided into two groups having 8 and 7 and 8 and 9 tracks, with a second drill parallel to the drill shown and a second ladder parallel to EI. All frogs on this second ladder should be located by Problem 50.

If the location of EI is fixed, extend IE to intersect AB at Y; then the distance from Y towards A to the point of frog is x_1 of Problem 50. Having this frog located proceed as before.

The first body track that may be connected directly to the ladder, numbering the body tracks as in Fig. 56, is $\frac{2\,M\,(\sin 2\,F + \sin F)}{P} + 1$ or the next even number greater. Thus, in the computations made to construct Fig. 56, $M = 72.40$, $F = 8°\ 10'$ and $P = 13$; and

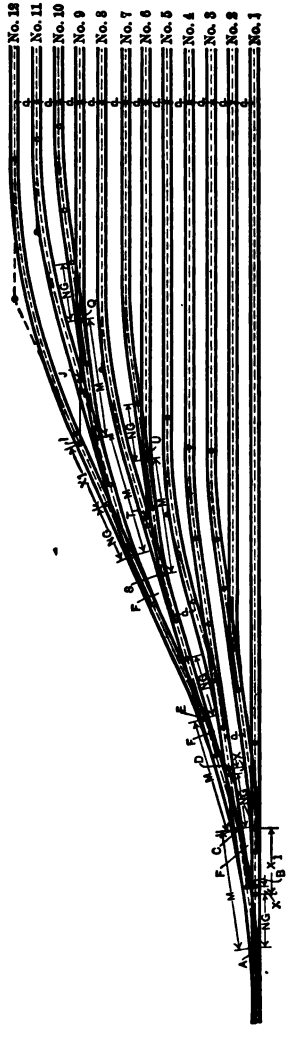

Fig. 56.

$$\frac{2 \times 72.40 \times (\sin 16° 20' + \sin 8° 10')}{13} + 1 = 4.6 + 1 = 5.6;$$

therefore the first body track with connection to the ladder is track No. 6.

Problem 53.

To locate the frogs on a ladder and the frog connecting the ladder to the drill track, where there is one frog on the ladder for each body track and where the ladder makes an angle with the body tracks greater than the frog angle but less than twice the frog angle, so that the frogs on the ladder may be the minimum permissible distance apart.

In Fig. 57, Given: M = minimum permissible distance point to point of frogs,
P = Distance center to center of tracks,
N = Frog number,
F = Frog angle,
W = Distance point to toe of frog,
K = Distance point to heel of frog,
G = Gage of tracks,
R = Radius of lead curve.

Required: Δ = Angle of intersection between the ladder and body tracks,
x = Distance measured on center line of ladder from point of intersection of center line of any body track and center line of ladder to point of frog,
T = Tangent distance to curve tangent to heel of frogs and to the body tracks,
T_2 = tangent distance to curve tangent to heel of frog in the lead track (or No. 1) and to the toe of the frog on the ladder leading into No. 2,
R_2 = Radius of curve connecting the drill and the ladder,
x_2 = Distance from point of intersection of center lines of ladder and drill to point of frog in drill (or No. 1).

$$\sin \Delta = \frac{P}{M}. \tag{1}$$

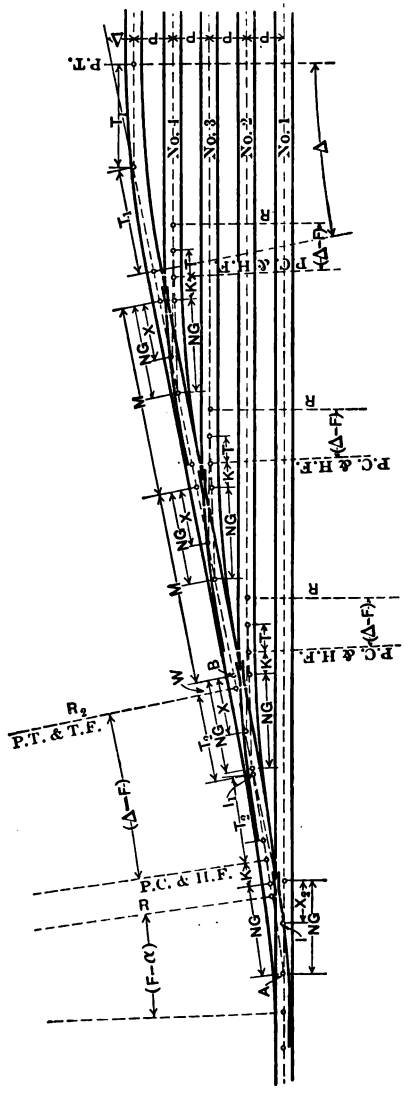

Fig. 57.

$$T = R \cdot \tan \frac{(\Delta - F)}{2}. \tag{2}$$

$$x = \frac{(NG + K + T) \cdot \sin (\Delta - F)}{\sin \Delta} - NG. \tag{3}$$

$\overline{BI} = M - (x + W)$, where the sign of x is contained in itself.

$$T_2 = \overline{BI} - \overline{I_1 I} = \overline{BI} - \frac{(NG + K + T_2) \sin F}{\sin \Delta}.$$

From which

$$T_2 = \frac{[M - (x + W)] \sin \Delta - (NG + K) \sin F}{\sin \Delta + \sin F}. \tag{4}$$

$$x_2 = \frac{(NG + K + T_2) \cdot \sin (\Delta - F)}{\sin \Delta} - NG. \tag{5}$$

$$R_2 = T_2 \cdot \cot \tfrac{1}{2} (\Delta - F). \tag{6}$$

$$D_2 = 2 \cdot \sin^{-1} \frac{50}{R_2}. \tag{7}$$

Where space is available for other arrangement, it is a matter of doubtful judgment to use ladders having one turnout on the ladder for every two or three body tracks simply to "economize" space and to save frog wear. Such procedure appears to be little less than gambling, where interest on the cost of otherwise unused land is wagered against the increased cost of maintenance and operation of tracks so laid as to occupy it. On account of the doubled or trebled central angles of the sharp yard curves and the frequent train movements over them, it is probable actual economy will result from saving the maintenance of rails and equipment and interference to operation rather than space and frog wear.

There are some places where all possible trackage space is imperative. Thus, frequently the purchase of land for terminal facilities and yards, especially in or near cities, is difficult. The property has to be acquired quietly and in small contiguous lots often of irregular shape, giving a resulting whole obtained at considerable cost and yet poorly adapted to yard development. Physical conditions, too, may sometimes limit the available area. Under these circumstances even the following expedients may be advantageously employed.

Problem 54.

To locate the frogs on a ladder so that the frogs may be the minimum permissible distance apart, where there is one frog on the ladder for each two body tracks and the angle of the ladder with the body tracks is greater than twice but less than three times the frog angle.

There are three methods of connecting the body tracks to the ladder track under the premises of the problem.

Case 1. Where the length of the curve tangent to the heel of the ladder track frog plus the total length of the frog is equal to or greater than the minimum permissible distance point to point of frog, i.e.,

$$\frac{\Delta - F}{D} \times 100 + (W + K) => M,$$

where D is the degree of the connecting curve, $(\Delta - F)$ and D are expressed in degrees and decimals of a degree and M = minimum permissible distance between frogs.

In this method the connecting curve is tangent to the heel of the frog on the ladder and to the toe of the frog on the body track. By its use is obtained greater clearance distance between the tracks leading off of and immediately adjacent to the ladder than in either of the other two methods.

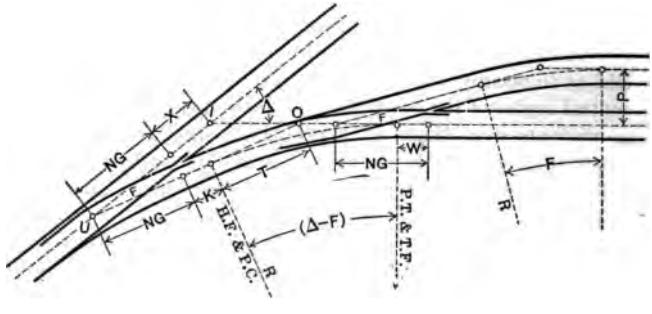

Fig. 58.

$$\sin \Delta = \frac{2P}{M},$$

$$T = R \cdot \tan \frac{\Delta - F}{2},$$

$$x = \frac{(NG + K + T) \sin (\Delta - F)}{\sin \Delta} - NG.$$

Case 2. Where the line of the frog is continued to intersection with the second body track and where the first body track is taken out of this straight line.

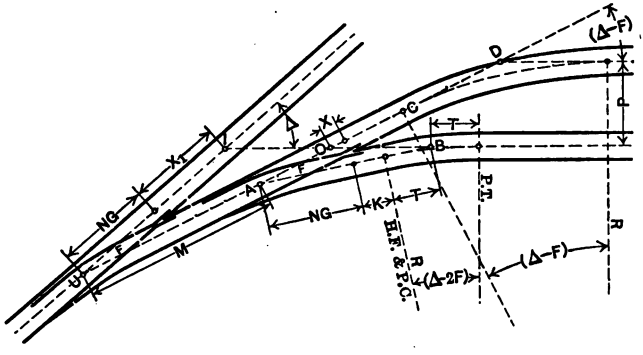

Fig. 59.

In Fig. 59, UI is the center line of the ladder making the angle Δ with the body tracks; UD is the center line of the line of the frog making the angle F with the ladder and making the angle $(\Delta - F)$ with the body tracks; AB is the line of the frog connecting the first body track to UD, making the angle F with UD and $(\Delta - 2F)$ with the body track; $\overline{CD} = T_2 =$ tangent distance for $(\Delta - F)$ degrees of a curve of radius R connecting UD with the second body track.

$$T = R \cdot \tan \frac{\Delta - 2F}{2}.$$

$$\overline{AO} = \frac{(NG + K + T) \sin (\Delta - 2F)}{\sin (\Delta - F)}.$$

$$x = \overline{AO} - NG.$$

$$\overline{UO} = M + AO.$$

$$x_1 = \frac{\overline{OU} \sin (\Delta - F)}{\sin \Delta} - NG,$$

$$= \frac{M \sin (\Delta - F) + (NG + K + T) \sin (\Delta - 2F)}{\sin \Delta} - NG.$$

$$T_2 = \overline{CD} = R \cdot \tan \frac{\Delta - F}{2}.$$

The limitation to the use of this method is that the following condition must exist:

$$\overline{AD} \gtreqless NG + K + T_2,$$

or $$P \gtreqless (NG + K + T_2 - \overline{AO}) \sin(\Delta - F).$$

Case 3. Where $\frac{(\Delta - F)}{D} \times 100 + (W + K) > M$ the arrangement shown by Fig. 60 may be used.

Let $\beta + \theta = \Delta - F$ and let $\frac{\beta \times 100}{D} + (W + K) = M$; then $\beta = [M - (W + K)]\frac{D}{100}$ and $\theta = \Delta - (F + \beta)$.

Procedure: Tangent to the heel of the frog in the ladder run in β degrees of the connecting curve to the toe of the frog leading to the first body. Make this frog tangent to the curve. From and tangent to the heel of this frog run in θ degrees of the connecting curve terminating tangent to the first body track.

In Fig. 60,

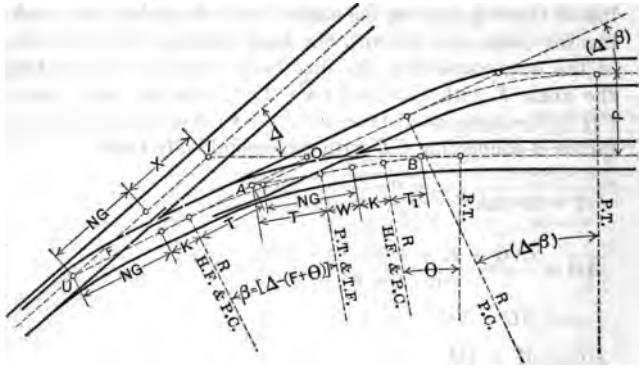

Fig. 60.

$$T = R \cdot \tan\frac{\beta}{2}.$$

$$T_1 = R \cdot \tan\frac{\theta}{2}.$$

$$\overline{AB} = T + W + K + T_1.$$

$$\overline{AO} = \frac{\overline{AB} \cdot \sin \measuredangle OBA}{\sin AOB} = \frac{(T + W + K + T_1) \sin \theta}{\sin (\Delta - F)}.$$

$$\overline{UO} = (NG + K + T) + \overline{AO}.$$

$$\overline{UI} = \frac{\overline{UO} \cdot \sin \measuredangle IOU}{\sin \measuredangle UIO} = \frac{\overline{UO} \cdot \sin (\Delta - F)}{\sin \Delta}.$$

$$x = \overline{UI} - NG.$$

The solution of the remainder of the problem is obvious from inspection of the figure.

There is very little difference in the actual result between Cases 2 and 3. In either Case 2 or 3 the distance center to center of the tracks leading off of and immediately adjacent to the ladder is too small to clear cars standing on adjacent tracks and there is an increased probability of side collisions or, as switchmen say, "side swiping." For instance, in making up a train, to set a car of a cut in the train ahead of a preceding car in the cut, the head car is temporarily set out on a track adjacent to the ladder, while the desired car is set in on the train. Unless the switchmen are careful to set the head car well around to the clearance point on the body track there is danger of side swiping or the possibility of rolling a man between cars. Case 1 sacrifices a little yard room for clearance.

To complete the ladder of Problem 54 it is necessary to connect it to the drill track. This may be done as follows:

Problem 55.

To locate the frog in the drill track to connect a ladder track that makes an angle with the body tracks greater than twice and less than three times the frog angle.

Select the desired case of Problem 54 for connecting the body tracks to the ladder and determine either x of Case 1 or x_1 of Case 2 or x of Case 3, letting the quantity determined equal x of Fig. 61.

In Fig. 61 the body tracks are connected to the ladder EI by Problem 54, Case 1.

$$M = \frac{2P}{\sin \Delta}. \quad \text{Obtained in solution of Problem 54.} \tag{1}$$

$$\overline{BI} = \frac{4P}{\sin \Delta} = 2M. \tag{2}$$

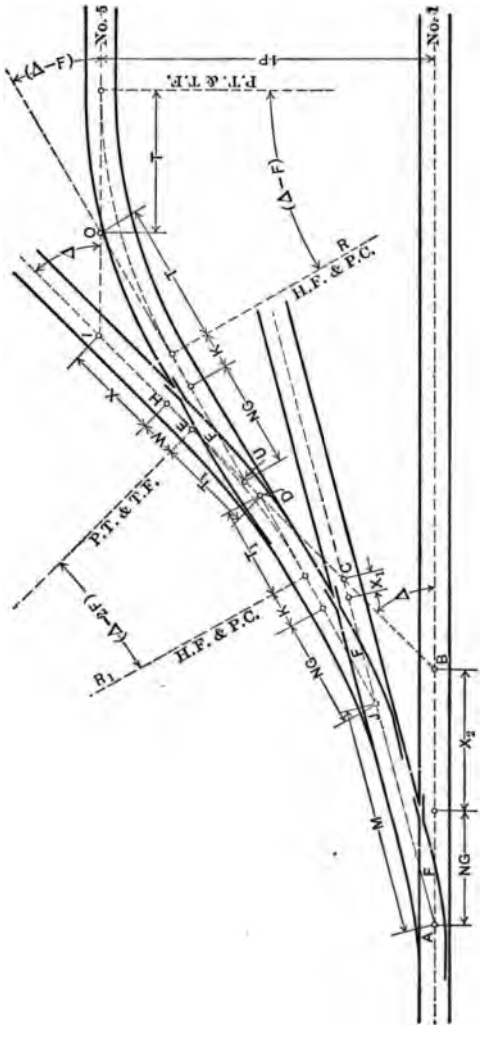

Fig. 61.

$$\overline{BE} = \overline{BI} - (\overline{EH} + \overline{HI}) = 2\,M - (W + x). \tag{3}$$

Solve for $\overline{BE}$. (4)

$$\overline{DE} = T_1.$$

$$\overline{CD} = \frac{\overline{JD}\sin \measuredangle CJD}{\sin \measuredangle JCD} = \frac{(NG + K + T_1)\sin F}{\sin(\Delta - F)}. \tag{5}$$

$$\overline{JC} = \frac{\overline{JD}\cdot\sin \measuredangle JDC}{\sin \measuredangle JCD} = \frac{(NG + K + T_1)\sin(\Delta - 2F)}{\sin(\Delta - F)}. \tag{6}$$

$$\overline{AC} = \overline{AJ} + \overline{JC} = M + \frac{(NG + K + T_1)\sin(\Delta - 2F)}{\sin(\Delta - F)}$$

$$= \frac{M\cdot\sin(\Delta - F) + (NG + K + T_1)\sin(\Delta - 2F)}{\sin(\Delta - F)}. \tag{7}$$

$$\overline{BC} = \frac{\overline{AC}\cdot\sin \measuredangle BAC}{\sin \measuredangle ABC}$$

$$= \frac{[M\cdot\sin(\Delta - F) + (NG + K + T_1)\sin(\Delta - 2F)]\cdot\sin F}{\sin(\Delta - F)\sin\Delta}. \tag{8}$$

$$\overline{BE} = \overline{BC} + \overline{CD} + \overline{DE}$$

$$= \frac{[M\cdot\sin(\Delta - F) + (NG + K + T_1)\cdot\sin(\Delta - 2F)]\sin F}{\sin(\Delta - F)\sin\Delta}$$

$$+ \frac{(NG + K + T_1)\sin F}{\sin(\Delta - F)} + T_1. \tag{9}$$

From equation (3), $\overline{BE}$ is known; therefore from equation (9)

$$T_1 = \frac{\overline{BE}\cdot\sin(\Delta - F)\cdot\sin\Delta - M\cdot\sin(\Delta - F)\cdot\sin F}{\sin(\Delta - 2F)\cdot\sin F + \sin\Delta\cdot\sin F + \sin(\Delta - F)\cdot\sin\Delta}$$

$$- \frac{(NG + K)\cdot\sin(\Delta - 2F)\cdot\sin F + (NG + K)\cdot\sin\Delta\cdot\sin F}{\sin(\Delta - 2F)\cdot\sin F + \sin\Delta\cdot\sin F + \sin(\Delta - F)\cdot\sin\Delta}. \tag{10}$$

Solve equation (10) for T_1.

$$R_1 = T_1\cdot\cot\frac{\Delta - 2F}{2}. \tag{11}$$

Solve equation (6) for $\overline{JC}$.

$$x_1 = \overline{JC} - NG\ . \tag{12}$$

$$\overline{AB} = \frac{\overline{AC}\cdot\sin \measuredangle ACB}{\sin \measuredangle ABC} = \frac{(M + \overline{JC})\cdot\sin(\Delta - F)}{\sin\Delta}. \tag{13}$$

$$x_2 = \overline{AB} - NG. \tag{14}$$

Ordinarily it is unnecessary to solve either equation (13) or (14) in drawing or staking out the work on the ground, unless the line $\overline{BI}$ is definitely fixed.

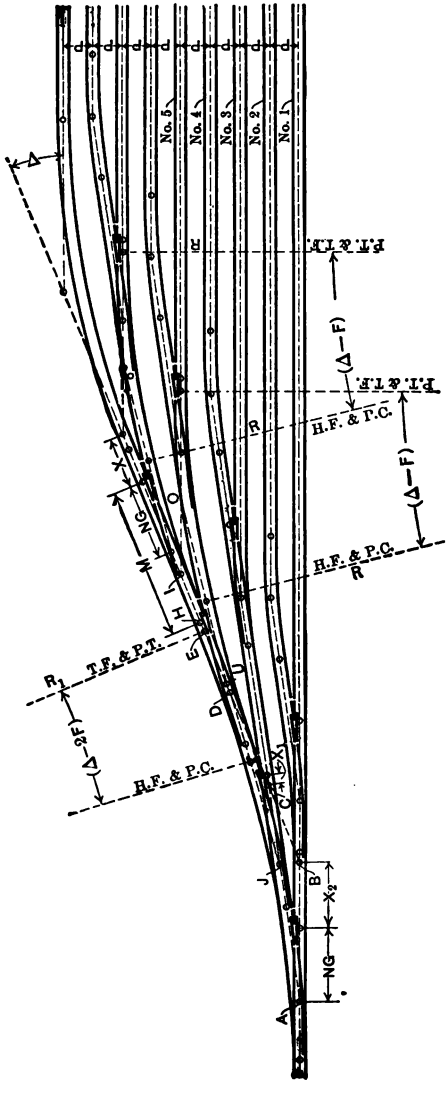
No. 5
No. 4
No. 3
No. 2
No. 1
P.T. & T.F.
(Δ—F)
H.F. & P.C.
T.F. & P.T.
(Δ—2F)
NG
A
B
C
D
E
H
I
J
M
O
R
R1
X
X1
X2
Δ

Fig. 62.

Without describing in farther detail the procedure to draw or to stake out a ladder such as given in Problems 54 and 55, Fig. 62 is given to show the complete design of one end of a yard of nine tracks connected by a ladder designed by Problem 54, Case 1, and Problem 55.

The notation is the same as in Figs. 58 and 61.

If there had been 18 tracks instead of 9, they would be divided into two groups of 9 each. The first 9 would be arranged as in Fig. 62. The second 9 tracks would be connected to a second ladder parallel to *BI*, and all frogs on the second ladder would be located by Problem 54. A connection between the first group and the second ladder would probably be put in between the second ladder and track 9 of the first group. Every frog to the body tracks on the second ladder would be a distance *M* apart.

CHAPTER IX

Vertical Curves

Given the rate and direction of two adjacent, intersecting grades, the elevation and station of their point of intersection, to construct a vertical curve tangent to the given grades and having a given uniform rate of change of grade per station.

R = Rate of grade in which the P. C. lies.

R_1 = Rate of grade in which the P. T. lies.

$d_R = (R - R_1)$, in the solution of which the proper sign of R and R_1 *is* considered, but the numerical result *is always* considered positive (+) and is the rate of separation of the given grades.

r = Assumed rate of change of grade per station, which is $\begin{matrix}\text{plus } (+)\\ \text{minus } (-)\end{matrix}$ when the curve is $\begin{matrix}\text{above}\\ \text{below}\end{matrix}$ the tangent grades.

N = Total length of curve in stations.

$= \frac{d_R}{r} = \frac{(R - R_1)}{r}$. If N comes out an odd number, use N equal to the next greater even number of whole stations and obtain a new value for r, thus: $r = \frac{(R - R_1)}{N}$.

$S = \frac{N}{2} d_R = \frac{(R - R_1)^2}{2r}$ = Total separation of grades from P. I. to P. T.

$E = \frac{S}{4}$ = External = Distance from P. I. to vertex of curve.

Elev. P. C. = Elev. P. I. $\pm \frac{RN}{2}$.

Elev. P. T. = Elev. P. I. $\pm \frac{R_1 N}{2}$.

Having determined the elevation of the P. C., the elevations of the intermediate stations are found by adding algebraically to the elevation of the P. C. $\left(R + \frac{r}{2}\right)$, to the resulting sum

$(R + 1\frac{1}{2}\,r)$ and to the successive sums $(R + 2\frac{1}{2}\,r)$, $(R + 3\frac{1}{2}\,r)$, etc. The Nth term added should give the predetermined elevation of the P. T. This check should always be made.

The proper value to assign to r will depend theoretically on the rate of the given grades, the location of the curve, whether in a sag or at a summit, the character of traffic and length of trains. For practical purposes Dean W. G. Raymond recommends for sags $r = 0.05$ to 0.25 and for summits $r = 0.10$ to 0.50. In average steam railroad work $r = 0.10$ for sags and $r = 0.20$ for summits give satisfactory results.

Fig. 63 shows different intersections of grades with the sign and practical values for r under average conditions.

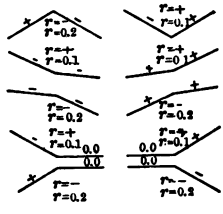

Fig. 63.

Example 1.

An ascending 1.00% grade intersects a descending 0.80% grade at Sta. 20, Elev. 200.00.

$R = +1.00$; $R_1 = -0.80$; $d_R = (R - R_1) = [1.00 - (-0.80)]$ $= 1.80$. Assume $r = 0.20$; then $N = \dfrac{(R - R_1)}{r} = \dfrac{1.80}{0.2} = 9$. But since this is odd, assume $N = 10$; then $r = \dfrac{(R - R_1)}{N} = \dfrac{1.80}{10}$ $= 0.18$. Since the curve is below the tangent grades, r is minus $(-)$.

$$\text{Elev. P. C.} = \text{Elev. P. I.} - \frac{RN}{2} = 200.00 - \frac{1 \times 10}{2} = 195.00.$$

$$\text{Station of P. C.} = 20 - \frac{N}{2} = 15.$$

$$\text{Elev. P. T.} = \text{Elev. P. I.} - \frac{R_1 N}{2} = 200.00 - \frac{0.8 \times 10}{2} = 196.00.$$

$$\text{Station of P. T.} = 20 + \frac{N}{2} = 25.$$

$$195.00 = \text{Elev. P. C. Sta. 15.}$$

$$(R + \tfrac{1}{2}r) = 1 + (-0.09) = +\ 0.91$$
$$195.91 = \text{Elev. Sta. 16.}$$

$$(R + 1\tfrac{1}{2}r) - 1 - 0.27 = +\ 0.73$$
$$196.64 = \text{Elev. Sta. 17.}$$

$$(R + 2\tfrac{1}{2}r) = 1 - 0.45 = +\ 0.55$$
$$197.19 = \text{Elev. Sta. 18.}$$

$$(R + 3\tfrac{1}{2}r) = 1 - 0.63 = +\ 0.37$$
$$197.56 = \text{Elev. Sta. 19.}$$

$$(R + 4\tfrac{1}{2}r) = 1 - 0.81 = +\ 0.19$$
$$197.75 = \text{Elev. Sta. 20.}$$

$$(R + 5\tfrac{1}{2}r) = 1 - 0.99 = +\ 0.01$$
$$197.76 = \text{Elev. Sta. 21.}$$

$$(R + 6\tfrac{1}{2}r) = 1 - 1.17 = -\ 0.17$$
$$197.59 = \text{Elev. Sta. 22.}$$

$$(R - 7\tfrac{1}{2}r) = 1 - 1.35 = -\ 0.35$$
$$197.24 = \text{Elev. Sta. 23.}$$

$$(R - 8\tfrac{1}{2}r) = 1 - 1.53 = -\ 0.53$$
$$196.71 = \text{Elev. Sta. 24.}$$

$$(R - 9\tfrac{1}{2}r) = 1 - 1.71 = -\ 0.71$$
$$196.00 = \text{Elev. P. T. Sta. 25.}$$

which checks with the elevation previously obtained for station 25.

Example 2.

A descending 0.50% grade intersects an ascending 0.50% grade at Sta. 20, Elev. 200.00.

$R = -0.50$; $R_1 = +0.50$; $d_R = (R - R_1) = [-0.50 + (-0.50)] = 1.0$. Assume $r = 0.10$.

$N = \dfrac{d_R}{r} = \dfrac{1.0}{0.1} = 10$. Since the curve is above the tangent grades, r is positive (+).

$$\text{Elev. P. C.} = \text{Elev. P. I.} + \frac{RN}{2} = 200.00 + \frac{0.50 \times 10}{2} = 202.50.$$

$$\text{Sta. P. C.} = 20 - \frac{N}{2} = 15.$$

$$\text{Elev. P. T.} = \text{Elev. P. I.} + \frac{R_1N}{2} = 200.00 + \frac{0.50 \times 10}{2} = 202.50.$$

$$\text{Sta. P. T.} = 20 + \frac{N}{2} = 25.$$

$$202.50 = \text{Elev. P. C. Sta. 15.}$$

$$(R + \tfrac{1}{2}r) = -0.5 + 0.05 = -\ \ 0.45$$
$$202.05 = \text{Elev. Sta. 16.}$$

$$(R + 1\tfrac{1}{2}r) = -0.5 + 0.15 = -\ \ 0.35$$
$$201.70 = \text{Elev. Sta. 17.}$$

$$(R + 2\tfrac{1}{2}r) = -0.5 + 0.25 = -\ \ 0.25$$
$$201.45 = \text{Elev. Sta. 18.}$$

$$(R + 3\tfrac{1}{2}r) = -0.5 + 0.35 = -\ \ 0.15$$
$$201.30 = \text{Elev. Sta. 19.}$$

$$(R + 4\tfrac{1}{2}r) = -0.5 + 0.45 = -\ \ 0.05$$
$$201.25 = \text{Elev. Sta. 20.}$$

$$(R + 5\tfrac{1}{2}r) = -0.5 + 0.55 = +\ \ 0.05$$
$$201.30 = \text{Elev. Sta. 21.}$$

$$(R + 6\tfrac{1}{2}r) = -0.5 + 0.65 = +\ \ 0.15$$
$$201.45 = \text{Elev. Sta. 22.}$$

$$(R + 7\tfrac{1}{2}r) = -0.5 + 0.75 = +\ \ 0.25$$
$$201.70 = \text{Elev. Sta. 23.}$$

$$(R + 8\tfrac{1}{2}r) = -0.5 + 0.85 = +\ \ 0.35$$
$$202.05 = \text{Elev. Sta. 24.}$$

$$(R + 9\tfrac{1}{2}r) = -0.5 + 0.95 = +\ \ 0.45$$
$$202.50 = \text{Elev. P. T. Sta. 25.}$$

which checks with the previously determined elevation of station 25.

Example 3.

A descending 1.40% grade intersects another descending 0.70% grade at Sta. 20, Elev. 200.00.

$R = -1.40$; $R_1 = -0.70$; $d_R = (R - R_1) = [-1.40 - (-0.70)]$

$= 0.70$. Assume $r = 0.10$. $N = \dfrac{d_R}{r} = \dfrac{0.70}{0.10} = 7.$

Since this is odd, assume $N = 8$; then $r = \dfrac{d_R}{N} = \dfrac{0.7}{8} = 0.0875$;

and since the curve is above the tangent grades r is positive (+).

$$\text{Elev. P. C.} = \text{Elev. P. I.} + \frac{RN}{2} = 200.00 + \frac{1.40 \times 8}{2} = 205.60.$$

$$\text{Sta. of P. C.} = 20 - \frac{N}{2} = 16.$$

$$\text{Elev. P. T.} = \text{Elev. P. I.} - \frac{R_1 N}{2} = 200.00 - \frac{0.7 \times 8}{2} = 197.20.$$

$$\text{Sta. of P. T.} = 20 + \frac{N}{2} = 24.$$

$$\begin{array}{rl}
 & 205.60000 = \text{Elev. P. C. Sta. 16.} \\
(R + \tfrac{1}{2}r) = -1.40 + 0.04375 = - & 1.35625 \\
 & \overline{204.24375} = \text{Elev. Sta. 17.} \\
(R + 1\tfrac{1}{2}r) = -1.40 + 0.13125 = - & 1.26875 \\
 & \overline{202.97500} = \text{Elev. Sta. 18.} \\
(R + 2\tfrac{1}{2}r) = -1.40 + 0.21875 = - & 1.18125 \\
 & \overline{201.79375} = \text{Elev. Sta. 19.} \\
(R + 3\tfrac{1}{2}r) = -1.40 + 0.30625 = - & 1.09375 \\
 & \overline{200.70000} = \text{Elev. Sta. 20.} \\
(R + 4\tfrac{1}{2}r) = -1.40 + 0.39375 = - & 1.00625 \\
 & \overline{199.69375} = \text{Elev. Sta. 21.} \\
(R + 5\tfrac{1}{2}r) = -1.40 + 0.4 \parallel 185 - & 0.91875 \\
 & \overline{198.77500} = \text{Elev. Sta. 22.} \\
(R + 6\tfrac{1}{2}r) = -1.40 + 0.56875 = - & 0.83125 \\
 & \overline{197.94375} = \text{Elev. Sta. 23.} \\
(R + 7\tfrac{1}{2}r) = -1.40 + 0.65625 = - & 0.74375 \\
 & \overline{197.20000} = \text{Elev. P. T. Sta. 24.}
\end{array}$$

which checks with the previously determined elevation for station 24.

The elevations recorded for the various stations would be taken to the nearest $\frac{1}{100}$. Thus,

Elev. P. C. Sta. 16 = 205.60.
Elev. Sta. 17 = 204.24.
Elev. Sta. 18 = 202.98.
Elev. Sta. 19 = 201.79.
Elev. Sta. 20 = 200.70.
Elev. Sta. 21 = 199.69.
Elev. Sta. 22 = 198.78.
Elev. Sta. 23 = 197.94.
Elev. P. T. Sta. 24 = 197.20.

Example 4.

An ascending 0.60% grade intersects an ascending 1.40% grade at Sta. 20, Elev. 202.40.

$R = +0.60$; $R_1 = +1.40$; $d_R = (R - R_1) = [0.60 - (+1.40)] = 0.8$. Assume $r = 0.10$.

Then $N = \frac{d_R}{r} = \frac{0.8}{0.10} = 8$. Since the curve is above the grades, r is positive (+).

$$\text{Elev. P. C.} = \text{Elev. P. I.} - \frac{RN}{2} = 202.40 - \frac{0.6 \times 8}{2} = 200.00.$$

$$\text{Sta. of P. C.} = 20 - \frac{N}{2} = 16.$$

$$\text{Elev. P. T.} = \text{Elev. P. I.} + \frac{R_1N}{2} = 202.40 + \frac{1.4 \times 8}{2} = 208.00.$$

$$\text{Sta. of P. C.} = 20 + \frac{N}{2} = 24.$$

		200.00	= Elev. P. C. Sta. 16.
$(R + \frac{1}{2}r) =$	$+0.60 + 0.05 =$	$+\ 0.65$	
		200.65	= Elev. Sta. 17.
$(R + 1\frac{1}{2}r) =$	$0.60 + 0.15 =$	$+\ 0.75$	
		201.40	= Elev. Sta. 18.
$(R + 2\frac{1}{2}r) =$	$0.60 + 0.25 =$	$+\ 0.85$	
		202.25	= Elev. Sta. 19.
$(R + 3\frac{1}{2}r) =$	$0.60 + 0.35 =$	$+\ 0.95$	
		203.20	= Elev. Sta. 20.
$(R + 4\frac{1}{2}r) =$	$0.60 + 0.45 =$	$+\ 1.05$	
		204.25	= Elev. Sta. 21.
$(R + 5\frac{1}{2}r) =$	$0.60 + 0.55 =$	$+\ 1.15$	
		205.40	= Elev. Sta. 22.
$(R + 6\frac{1}{2}r) =$	$0.60 + 0.65 =$	$+\ 1.25$	
		206.65	= Elev. Sta. 23.
$(R + 7\frac{1}{2}r) =$	$0.60 + 0.75 =$	$+\ 1.35$	
		208.00	= Elev. P. T. Sta. 24.

which checks with the previously determined elevation for station 24.

To determine a vertical curve by offsets from the tangent grades.

In the parabola, offsets from the tangent to the curve, that are parallel to the diameter, vary as the square of their distance from the point of tangency.

The offset at the center or vertex of the curve is

$$E = \frac{S}{4} = \frac{1}{4} \times \frac{N}{2} \times d_R = \frac{1}{8} \times \frac{(R - R_1)^2}{r}$$

and its distance from the point of tangency is $\frac{N}{2}$. Let O be any other offset and n its distance from the point of tangency.

Then $$\frac{E}{\left(\frac{N}{2}\right)^2} = \frac{O}{n^2}. \qquad \therefore \quad O = E\frac{n^2}{\left(\frac{N}{2}\right)^2}.$$

If the curve is divided into an even number of stations, each n in length, then the stations are distant from the tangent point $1\,n$, $2\,n$, $3\,n$ and so on to $\frac{N}{2}$.

If the corresponding offsets are O_1, O_2, O_3 and so on to E, then $$O_1 = E\frac{(1\,n)^2}{\left(\frac{N}{2}\right)^2}, \quad O_2 = E\frac{(2\,n)^2}{\left(\frac{N}{2}\right)^2}, \quad O_3 = E\frac{(3\,n)^2}{\left(\frac{N}{2}\right)^2}$$

and so on to E,

or $$O_1 = 4\,E\frac{n^2}{N^2}, \quad O_2 = 4\,E\frac{4\,n^2}{N^2}, \quad O_3 = 4\,E\frac{9\,n^2}{N^2}$$ and so on to E,

or $$O_1 = S\frac{n^2}{N^2}, \quad O_2 = 4\,S\frac{n^2}{N^2}, \quad O_3 = 9\,S\frac{n^2}{N^2},$$

or $$O_1 = S\frac{n^2}{N^2}, \quad O_2 = 4 \times O_1, \quad O_3 = 9 \times O_1, \quad O_4 = 16 \times O_1, \text{ etc.}$$

The offsets are $\begin{matrix}\text{positive } (+)\\ \text{minus } (-)\end{matrix}$ when the curve is $\begin{matrix}\text{above}\\ \text{below}\end{matrix}$ the tangent grades.

Example 1.

An ascending 1.00% grade intersects a descending 0.80% grade at station 20, elevation 200.00.

$$R = +1.00; \quad R_1 = -0.80;$$
$$d_R = (R - R_1) = [+1.00 - (-0.80)] = 1.8;$$
$$S = \frac{N}{2}d_R = \frac{10}{2} \times 1.8 = 9.0,$$

assuming the curve 10 stations long.

$$\text{Elev. P. C.} = \text{Elev. P. I.} - \frac{RN}{2} = 200.00 - \frac{1.0 \times 10}{2} = 195.00.$$

$$\text{Sta. P. C.} = 20 - \frac{N}{2} = 15.$$

$$\text{Elev. P. T.} = \text{Elev. P. I.} - \frac{R_1N}{2} = 200.00 - \frac{0.8 \times 10}{2} = 196.00.$$

$$\text{Sta. P. T.} = 20 + \frac{N}{2} = 25.$$

Since the curve is below the tangent grades, the offsets are minus (−). The offsets are symmetrical about the center of the curve.

Sta.			Offsets	Tan. Grade	Curve Elev.
P. C. 15	$O =$		− 0.00	195.00	195.00
16	$O_1 = S\frac{n^2}{N^2}$	$= 9 \times \frac{1}{100} =$	− 0.09	196.00	195.91
17	$O_2 = 4 \times O_1 =$		− 0.36	197.00	196.64
18	$O_3 = 9 \times O_1 =$		− 0.81	198.00	197.19
19	$O_4 = 16 \times O_1 =$		− 1.44	199.00	197.56
20	$O_5 = 25 \times O_1 =$		− 2.25	200.00	197.75
21	$O_6 =$		− 1.44	199.20	197.76
22	$O_7 =$		− 0.81	198.40	197.59
23	$O_8 =$		− 0.36	197.60	197.24
24	$O_9 =$		− 0.09	196.80	196.71
P. T. 25	$O_{10} =$		− 0.00	196.00	196.00

The proper length of curve to use should be determined as before, so that this method simply offers a choice of means for determining the elevations of the intermediate stations. This method is convenient where the length of the curve is fixed by physical or other conditions, such that the curve is short and the points on the curve are desired at other than 100-ft. distances.

CHAPTER X

Capitalization — Annual Cost — Equivalent Cost

Determination of the relative economy of two or more articles is a matter of common sense and knowledge of all local conditions affecting the ultimate result assisted by certain mathematical deductions.

An opinion based on good judgment substantiated by mathematical demonstration should certainly be worthy consideration, and the better the knowledge of all phases of the situation, the better the judgment displayed in placing a proper value upon the elements of the mathematical equations, the more surely are the chances of error in the result decreased.

Various methods of assistance in arriving at a conclusion as to relative economy will be given, all of which give the same order of merit and into which always enter at least four elements:

1. Cost, which should include cost of raw material, cost of fabricating, cost of transportation and handling, and cost of placing or erecting.
2. Life, that is, the time elapsing between the date of installation and the date when it becomes necessary to renew or replace.
3. Cost of replacing or renewing.
4. The cost of money or rate of interest.

To these may be added,

5. Maintenance, which is the cost of repairs or depreciation.
6. Salvage, the scrap value of the article at the close of its period of usefulness.

In the formulas to be developed, only the first five elements shall be considered.

On a basis of **Capitalization**, that article is considered the cheapest which, present conditions prevailing, will require the least amount to install it, and to be set aside now at compound interest to reproduce it forever.

Capitalization is made up of,

a. First cost $= C$.

b. The amount at simple interest necessary to produce annually in interest the cost of maintenance, equal to $M' = \frac{M}{R}$.

c. The amount at compound interest necessary to produce in interest during the life of the article the first cost of it, equal to $C' = \frac{C}{(1+R)^N - 1}$.

$$\text{Total capitalization} = (C + M' + C') = \frac{C\,(1+R)^N}{(1+R)^N - 1} + \frac{M}{R}, \quad (1)$$

where N = the years of life of the article, $R = \frac{\text{rate of interest}}{100}$, and M = cost per year to maintain.

As sometimes occurs, the cost of maintenance is the same for the articles considered, and may be neglected, then

$$\text{Total capitalization} = \frac{C\,(1+R)^N}{(1+R)^N - 1}. \quad (2)$$

On the basis of **Annual Cost**, that article is the cheapest which shows the least annual cost.

Annual cost is made up of,

a. Interest on first cost $= I = CR$.

b. The amount that must be spent annually for maintenance $= M$.

c. The amount that must be set aside annually at compound interest to provide for renewal at the expiration of the life of the article, equal to $F = \frac{CR}{(1+R)^N - 1}$.

$$\text{Total annual cost} = (I + M + F) = \frac{CR\,(1+R)^N}{(1+R)^N - 1} + M. \quad (3)$$

Neglecting cost of maintenance,

$$\text{Total annual cost} = \frac{CR\,(1+R)^N}{(1+R)^N - 1}. \quad (4)$$

From inspection of equations (1) and (3) and (2) and (4) it will be noted that annual cost is simple interest on the total capitalization, and the equation for it might have been written without special development since, if the money was actually borrowed or set aside to provide the total capitalization, its annual cost would be the interest on it.

On the basis of **Equivalent Cost** one article costs the same as another when the total capitalization or total annual cost of one is equal respectively to that of the other.

Thus if C and N are the first cost and the life of one article and C' and N' those of another, by substituting these values separately in equations (1) and (2), equating and solving for C', the value of C' is obtained such that the cost of C' is equivalent to the cost of C. Expressed as an equation,

From equation (1)

$$C' = \left[\frac{C(1+R)^N}{(1+R)^N-1} \times \frac{(1+R)^{N'}-1}{(1+R)^{N'}}\right] + \left[\frac{M-M'}{R} \times \frac{(1+R)^{N'}-1}{(1+R)^{N'}}\right] \tag{5}$$

From equation (2), where maintenance is neglected,

$$C' = \frac{C(1+R)^N}{(1+R)^N-1} \times \frac{(1+R)^{N'}-1}{(1+R)^{N'}}. \tag{6}$$

CHAPTER XI

Miscellaneous Formulas and Rules of the Thumb

This chapter includes some exact and some approximate formulas that are respectively necessary and convenient to know. To separate the exact from the approximate would prevent presenting the subject-matter in the most convenient form for ready reference. By inspection the exact methods are at once distinguished from the approximate, and proper weight may be given to each.

Frequently, in preliminary estimates and in preparation of study plans, sufficient time cannot be had for making carefully computed detailed plans and estimates, even if otherwise they were justified. The engineer is thus sometimes reduced to the choice of a guess or an approximation. The rules of the thumb are given to lessen guessing by affording a means of easily making reasonably close approximations. They are not presented as criteria for design.

Where the origin of a formula is known it will be given. Otherwise, if a quotation, the author will have to be satisfied with the honor of being quoted.

Acres: Multiply sq. ft. by 23 and point off 6 decimal places.

Multiply 100 ft. stations of 100 ft. wide right of way by 0.23.

Bridge Weights:

l = length of span,

w = weight per linear foot,

p = live load per linear foot.

Highway Bridges, with 16 ft. wide roadway, weight per linear foot,

$$w = 0.05\, l \sqrt{p} + 50.$$

For the common value of $p = 1600$ lbs. per foot, the formula becomes, weight per linear foot,

$$w = 2\, l + 50.$$

For bridges of less or greater width than 16 ft. subtract or add an amount per foot equal to $0.2\,l$ for each two feet change in width.

To the weight of steel must be added the weight of the wooden floor, joists, etc., estimated usually at 4 lbs. per ft. B.M.

Railway Bridges. — For bridges designed for a live load consisting of two 182½-ton locomotives, followed by a uniform load of 5000 lbs. per foot (Cooper's $E - 50$ loading), and having open floors:

For deck plate girders, weight per linear foot,

$$w = 12\tfrac{1}{2}\,l + 100.$$

For through plate girders with beams and stringers, weight per linear foot,

$$w = 14\,l + 450.$$

For trusses, weight per linear foot,

$$w = 8\,l + 700.$$

To the weight of steel must be added the weight of track, amounting to from 400 to 500 lbs. per foot.

The formulas here given are to be considered as only roughly approximate. — From "Modern Framed Structures," Johnson, Bryan and Turneaure.

Bridge Towers, for Steel Viaducts. — The following rules of the thumb give roughly the approximate weight of metal in pounds.

For towers:

20 ft. high, lbs. metal = profile area in sq. ft. × 26.
20–30 ft. high, lbs. metal = profile area in sq. ft. × 24.
30–40 ft. high, lbs. metal = profile area in sq. ft. × 20.
40–60 ft. high, lbs. metal = profile area in sq. ft. × 19.
60–90 ft. high, lbs. metal = profile area in sq. ft. × 17.

Bridge Span, Economical Length of. — Physical conditions permitting, the economical bridge span is one of such length that the cost of the superstructure equals the cost of the substructure. If the piers are of equal cost, then theoretically the length of span is

$$l = \frac{L}{x}\sqrt{\frac{100\,c}{ap}}.$$

L = total length of bridge,

c = cost of one pier in dollars,

$a = \begin{cases} 12 \text{ for girders,} \\ 5 \text{ for trusses,} \end{cases}$

p = cost per pound of iron in cents,

x = most economical length of span.

—From "Elements of Railroad Engineering," by Wm. G. Raymond.

Concrete.—Approximate quantities of materials per cu. yd.

$$\text{bbls. of cement} = \frac{11}{\text{sum of parts of all materials}}.$$

$$\text{bbls. of sand} = \text{bbls. cement} \times \text{parts of sand.}$$

$$\text{cu. yds. sand} = \frac{3.8}{27} \times \text{bbls. of sand.}$$

$$\text{bbls. of stone} = \text{bbls. cement} \times \text{parts of stone.}$$

$$\text{cu. yds. stone} = \frac{3.8}{27} \times \text{bbls. of stone.}$$

Example:

Required, cement, sand and stone for 1 cu. yd. 1–3–6 mixture.

$$\text{bbls. cement} = \frac{11}{1+3+6} = 1.10.$$

$$\text{cu. yds. sand} = 1.1 \times 3 \times \frac{3.8}{27} = 0.46+.$$

$$\text{cu. yds. stone} = 1.1 \times 6 \times \frac{3.8}{27} = 0.93-.$$

For 100 cu. yds. concrete 1–3–6 mixture there are required approximately 110 bbls. cement, 47 cu yds. sand, and 93 cu yds. stone.

With good Portland cement, broken stone or screened gravel, a 1–3–6 mixture may be used for general purposes, such as walk foundations, walls, foundations, cellar floors, milk houses, sewers, machine foundations and similar work.

A 1–2–4 mixture should be used for engine foundations and structures subjected to pounding or vibrations.

A 1–4–8 mixture may be used for large masses of concrete subjected to compression only, such as street foundations and similar work.

More exact proportions of materials for concrete are, for one cu. yd. rammed concrete, of stone 2½″ and under with dust screened out:

Mixture.	Bbls. Cement.	Cu. yds. Sand.	Cu. yds. Stone.
1–4–8	0.78	0.48	0.95
1–3–6	1.02	0.47	0.93
1–2–4	1.48	0.45	0.90

With screened gravel ¾″ and under:

Mixture.	Bbls. Cement.	Cu. yds. Sand.	Cu. yds. Gravel.
1–4–8	0.71	0.43	0.86
1–3–6	0.92	0.42	0.84
1–2–4	1.34	0.41	0.81

Cement, Portland. — 1 cu. ft. weighs 100 lbs.

1 bbl. contains 3.8 cu. ft.

1 bbl. for shipping weighs (gross) 400 lbs.

1 sack = ¼ bbl. and either in paper or cloth weighs 95 lbs. — From Speed Portland Cement Co.

Curves. — *Curve resistance* results finally in compensating grade for curvature. The proper compensation in grade per degree of curve per 100 ft. has been variously recommended to be from 0.025% to 0.05%. The American Railway Engineering and Maintenance of Way Association recommends that the compensation shall usually be 0.035%.

Where compensation may be made without materially increasing the cost or difficulty of the work, it should be liberal, even 0.04 to 0.05%. Where compensation may be had only at greatly increased difficulty and expense, then the least possible compensation to assure equal resistance on the curves and tangents should be used. From experience and the best theoretical computations available the recommendations of Dean W. G. Raymond in his "Elements of Railroad Engineering" seem advisable. These are:

Degree of Curve	1	2–4	5 and over
Grade compensation per degree per 100 feet	0.04	0.03	0.025

Curves, Approximate Determination of Degree of. — The degree of a curve, in degrees, is equal to the mid-ordinate to a sixty-two (62) foot chord to the gage side of the outer rail of the curve, the ordinate being measured in inches.

The above is useful in lining old track where there are no center stakes.

The degree of a simple railroad curve may be approximately determined by eye with the assistance of the following diagram based on the approximate formulas:

For 33-ft. rails, $N = \sqrt{\frac{198}{D}}$. For 30-ft. rails, $N = \sqrt{\frac{240}{D}}$.

N = number of rail lengths and fraction thereof and D = the degree of the curve.

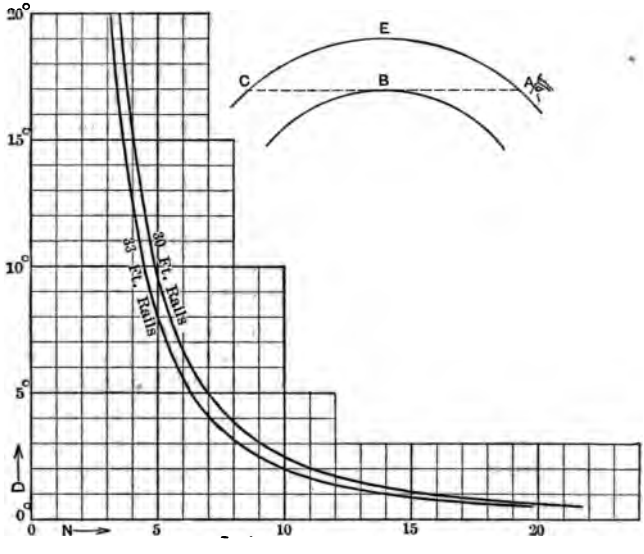

Fig. 64.

Sight from A on the outer rail tangent to the inner rail at B to the outer rail at C. Count the number of rails and the fraction of a rail in the arc CEA. The degree of the curve may be taken from the proper curve of the diagram.

Curves, Elevation of Outer Rail on. — Generally the maximum elevation of the outer rail of curves should never exceed seven (7) inches to eight (8) inches, and the maximum velocity around a given curve should, other conditions of the track permitting, be limited to the velocity corresponding to the maximum elevation. The run-off or approach to curves should be uniform and should attain the full elevation at

the P. C. and P. T. of the curve, except on reverse curves or curves with short tangents. The American Railway Engineering and Maintenance of Way Association recommends "that the run-off be made at the rate of one (1) inch in sixty (60) feet." In ordinary practice a run-off of one (1) inch in forty (40) feet will give satisfactory results. The run-off may begin on the curve where the length of tangent between two curves is not sufficient for the entire run-off for both curves to be on the tangent. In such cases the distances from the P. C. and P. T. of the adjacent curves to the point of level track on the tangent should be proportionate to the elevation of the curves. The point of level track on reverse curves should be at the P. R. C. The low rail should be maintained at grade.

Let R = Radius of curve in feet,
V = Velocity in miles per hour,
g = Acceleration due to gravity = 32.16,
E = Elevation of outer rail in feet,
e = Elevation of outer rail in inches.

Then in a form easy to remember: The elevation of the outer rail in feet is equal to gravity times the square of the velocity in miles per hour divided by one hundred times the radius in feet, or

$$E = \frac{gV^2}{100\,R},$$

and in inches

$$e = \frac{12\,gV^2}{100\,R}.$$

$R = \frac{5730}{D}$, where D is the degree of curve in degrees and decimals.

Whence

$$E = 0.000056126\ V^2D.$$
$$e = 0.00067351\ V^2D.$$

For industrial tracks having curves of 16 degrees and over very little elevation should be given to the outer rail. Experience has shown that in cities or towns for industrial tracks with curves from 20 to 30 degrees, and over which a velocity of 10 miles an hour is rarely ever attained and

seldom if ever exceeded, no elevation should be given to the outer rail.

Curves, Widening Gage on. — The American Railway Engineering and Maintenance of Way Association makes the following recommendation:

"Curves eight degrees and under should be standard gage. Gage should be widened one-eighth inch for each two degrees or fraction thereof over eight degrees, to a maximum of 4 ft. 9½ in. for tracks of standard gage. Gage, including widening due to wear, should never exceed 4 ft. 9½ in."

"The installation of frogs upon the inside of curves is to be avoided wherever practicable, but where same is unavoidable, the above rule should be modified in order to make the gage of the track at the frog standard."

Gage should not be widened until the wheels of the engine, which form its rigid wheel base, bind. Any track around which the engine will go is wide enough gage for the cars that follow. Very few engines will bind on curves as sharp as eleven or twelve degrees. Wide gage certainly increases the cost of rail maintenance, and especially the wear on the inner rail, which it causes to flow under the pressure of the worn wheel treads.

Foundations. — *To Resist Overturning* it is variously approximately estimated that the base of a retaining wall should be 0.40, (0.40 + 1) and 0.45 times its height.

To Resist Settlement. — The L. & N. R. R. Co., based on Rankine's Theory of Earth Pressure, approves the following. Assuming a natural slope of 1½ to 1, for each foot depth of foundation below the undisturbed surface of the soil, a pressure of 600 lbs. per sq. ft. of bearing surface may be conservatively assumed for foundations upon dry sand. If the foundation were placed in a cellar or other excavation, the pressure per square foot of bearing surface should not exceed 600 lbs. for each foot in depth of foundation below the level of the cellar or other excavation.

The Bridge Department of the I. C. R. R. Co. approves a pressure of two tons, equal 4000 lbs., per sq. ft. of bearing surface for bridge piers, pedestals, abutments, etc., for foundations on ordinary soils having a natural slope of 1½ to 1. Where piles are used in foundations, 15 tons, equal 30,000 lbs., pressure per pile is used.

Grade Resistance. — Grade resistance in pounds per ton of 2000 pounds equals 20 times the rate per cent of grade.

$R_G = 20\,r$. Thus for a 1.0% grade $R_G = 20 \times 1.0 = 20$ pounds where R_G = Resistance due to grade. — From A. M. Wellington.

Grade, Equivalent Tangent Grade. — If the location and elevation of both the foot and summit of a grade are fixed, where a portion of the distance is curve and a portion tangent, a grade of uniform resistance is the equivalent tangent grade and may be found as follows:

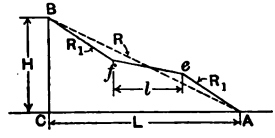

Fig. 65.

A and B are the points the location and elevation of which are fixed. Let L = total distance in stations of 100 ft.; H = total rise between A and B in feet; l = length in stations of a curve from e to f; D = degree of curve; c = compensation per degree per station; R = rate minimum uniform grade from A to B; R_1 = rate of equivalent tangent grade.

$$(L - l)\,R_1 + l\,(R_1 - Dc) = H = LR.$$

$$\therefore \quad LR_1 - lDc = LR,$$

$$R_1 = R + \frac{lDc}{L}$$

and where Δ = total central angle of the curve, then

$$R_1 = R + \frac{\Delta c}{L}.$$

If there are more than one curve between A and B the problem is easily extended. Thus,

$$R_1 = R + \frac{\Sigma lDc}{L} = R + \frac{\Sigma \Delta c}{L}.$$

Locomotive Rating. —

Tractive effort of adhesion $= T_a = 2000\,AW_d$. (1)

Cylinder tractive effort $= T_c = \dfrac{Pd^2S}{D}$ (gross). (2)

$= \dfrac{Pd^2S}{D} \times 0.85$ (net). (3)

A = Coefficient of adhesion between the driving wheels and the rail, which may vary under different conditions from $\frac{1}{3}$ to $\frac{1}{10}$ or less, but which under ordinary conditions is assumed to be $\frac{1}{4}$, in winter probably $\frac{1}{5}$,
W_d = Total weight on drivers, in tons of 2000 lbs.,
P = Boiler pressure in pounds per square inch,
d = Diameter of cylinder in inches,
S = Length of stroke of piston in inches,
D = Diameter of drivers in inches,
0.85 = Coefficient of reduction due to loss in friction of parts, etc.

$$\text{Gross rating} = \frac{T}{\Sigma R}. \tag{4}$$

T = Tractive effort in pounds,
ΣR = Total resistance in pounds per ton of 2000 lbs.,

$$\Sigma R = R_G + R_T, \tag{5}$$

$$R_G = 20\,r = 0.379\,E, \tag{6}$$

r = Rate per cent of grade,
E = Rise in feet per mile,
R_T = Train resistance in pounds per ton.

A locomotive will probably haul a maximum load at a velocity of from 7 to 10 miles per hour. Ordinarily a velocity of 12 miles per hour is assumed a fair average velocity for heavily loaded freight trains.

In rating locomotives the Illinois Central Railroad assumes a velocity of 12 miles per hour and a train resistance of 6.1 pounds per ton of 2000 pounds.

Cluett's formulas to fit the train resistance curves of the late A. M. Wellington give at 12 miles per hour,

For loaded trains 4.99 lbs.
For empty trains 7.15 lbs. } Average 6.07 lbs.

W. G. Raymond's formulas give

For loaded trains 4.39 lbs.
For empty trains 6.05 lbs. } Average 5.22 lbs.

Engineering News and Baldwin Locomotive Works Formulas give

Train resistance = 5 lbs. per ton of 2000 lbs.

Neglecting the last result, which does not take into account the make-up of the train, and since the average train is made up of both loads and empties, a train resistance somewhere

between the upper and lower limits of Cluett's and Raymond's formulas may be expected.

The resistance of 6.1 lbs. should be conservative. When comparing the performance of a particular engine on two different grades the relative advantage of one grade over the other should be determined with sufficient accuracy by the adoption of 6.1 lbs. as the train resistance.

From equations (3), (4), (5) and (6)

$$\text{Gross rating} = \frac{0.85\,Pd^2S}{D\,(20\,r + 6.1)} = \frac{0.85\,Pd^2S}{D\,(0.379\,E + 6.1)}. \qquad (7)$$

At 12 miles per hour the locomotive should be able to develop the full cylinder effort indicated in equation (3). Test should be made to be assured that (3) does not exceed (1); thus $\frac{0.85\,Pd^2S}{D}$ should never exceed $2000 \cdot A \cdot W_d$.

The load in tons of 2000 lbs. that may be hauled behind the tender is the

$$Rating = \frac{0.85\,Pd^2S}{D\,(20\,r + 6.1)} - W = \frac{0.85\,Pd^2S}{D\,(0.379\,G + 6.1)} - W. \qquad (8)$$

W = weight of locomotive and loaded tender.

Given the rating of a locomotive, to find the grade corresponding to it.

$$r = \frac{1}{20}\left[\frac{\text{Tractive effort}}{\text{Gross rating}} - \text{Train resistance}\right]. \qquad (9)$$

Given the rating of a locomotive on two different grades and the trains required on one grade, to find the trains required to handle the same tonnage on the other grade.

$$\text{Trains}_1 : \text{Trains}_2 :: \frac{\text{Tonnage}}{\text{Rating}_1} : \frac{\text{Tonnage}}{\text{Rating}_2}.$$

$$\text{Trains}_2 = \frac{\text{Trains}_1 \times \text{Rating}_1}{\text{Rating}_2}. \qquad (10)$$

The above holds true whether it is considered that each train hauls the full tonnage rating or whether from train and tonnage statistics the average train load is less than the rating and it is considered that the average load on the new grade is increased by the same per cent as the rating

Where the number of trains and tonnage are fixed

$$\text{Rating} = \frac{\text{Tonnage}}{\text{Trains}}. \qquad (11)$$

Having the rating, the rate of grade may be found by equation (9).

Where the tonnage is different in either direction over a division and the number of trains must be kept the same. Given one rate of grade, to determine rate of grade in the other direction.

Determine the rating on the known grade by equation (8), which call rating_1. Then

$$\text{Trains}_1 = \frac{\text{Tonnage}_1}{\text{Rating}_1}, \text{ also } \text{Trains}_2 = \frac{\text{Tonnage}_2}{\text{Rating}_2}.$$

But the trains must be kept the same; therefore

$$\frac{\text{Tonnage}_1}{\text{Rating}_1} = \frac{\text{Tonnage}_2}{\text{Rating}_2}$$

and

$$\text{Rating}_2 = \frac{\text{Tonnage}_2 \times \text{Rating}_1}{\text{Tonnage}_1}. \qquad (12)$$

From equation (9) the corresponding rate of grade may be determined.

Miles. — Multiply feet by 19 and point off 5 decimal places.

Piles, *Safe Load for.* —

Engineering News Formula of A. M. Wellington, from "Elements of Railroad Engineering," by W. G. Raymond.

$$\text{Safe Load} = \frac{2\,Wh}{S+1}.$$

W = Weight of hammer in pounds,
h = Fall of hammer in feet,
S = Penetration of pile in inches under last blow.

The arbitrary constant 1 is added to allow for earth settling around pile between blows, and where blows are rapid, as with a steam hammer, may be reduced to $\frac{1}{10}$.

Rail Section. — Approximate: 80-lb. rail is 5″ high and has a 5″ base. For each increase or decrease of $\frac{3}{16}$″ in height or width of base add or subtract 5 lbs. per linear yard.

Rail, Weight of, per Mile of *Track.* —

Gross tons = $\frac{11}{7}$ × Weight per linear yard of rail.

Short tons = $\frac{7}{4}$ × Weight per linear yard of rail.

" Track " Railroad Supply Co.

Exact: One mile of *track* of 100-lb. rail requires 157.1429 gross tons.

One mile of *track* of 100-lb. rail requires 176.00 short tons.

Right of Way. — The average railroad, having generally 100 ft. wide right of way, requires for all purposes an average of 13⅓ acres of waylands per mile.

Right-angled Triangles of Small Altitude. —

Let a be the altitude, b the base and h the hypotenuse.

$$\text{Given } a \text{ and } h, \text{ then } b = h - \frac{a^2}{2h}.$$

$$\text{Given } a \text{ and } b, \text{ then } h = b + \frac{a^2}{2b}.$$

This is sufficiently close for most purposes where the altitude is ¼ the base or less. With base 4, altitude 1, error < ½ of 1%. — From A. M. Wellington.

Train Resistance. —

For fully loaded trains,

$$R_T = 3.8 + 0.0076\,V^2 + \frac{16.4}{(V+1)^2}.$$

For empty trains,

$$R_T = 5.4 + 0.01\,V^2 + \frac{70}{(V+3)^2}.$$

By Sanford L. Cluett to fit train resistance curves of the late A. M. Wellington.

For fully loaded trains,

$$R_T = 3.5 + 0.0055\,V^2 + \frac{16}{(V+1)^2}.$$

For empty trains,

$$R_T = 5.0 + 0.007\,V^2 + \frac{8}{(V+1)^2}.$$

— From "Elements of Railroad Engineering," W. G. Raymond.

Tons. — For gross tons multiply pounds by 45 and point off 5 decimal places.

Track. —

Lead for split switches. — Approximate:

$$= L = (S + W) + 2\left[\frac{N'(4.7\,N - W) - SN}{N + N'}\right].$$

S = length of switch rail in feet,

W = distance from point to toe of frog,

N = number of frog,

$N' = \dfrac{\text{"}S\text{" in feet}}{\text{"}H\text{" in inches}} \times 12,$

H = heel distance.

Radius of lead curve

$$= R = \frac{N'(4.7N - W) - SN}{N + N'} \times \frac{4NN' + 1}{2(N' - N)}.$$

Degree of lead curve $= D = \frac{5730}{R}$.

Degree of lead curve for turnouts on curves.

From the outside of a curve,

Degree of lead curve = Degree of lead for straight track minus Degree of given curve.

From the inside of a curve,

Degree of lead curve = Degree of lead curve for straight track plus degree of given curve.

Slip Switches. — Distance from intersection of center lines to points of extreme frogs equals NG, to points of near frogs equals $\frac{G}{4N}$.

Crossovers. — Frog Distance — Straight Track — *Same Number Frogs* $= X = N(P - 2G) - \frac{P}{4N}$.

N = Number of frog,

G = Gage of tracks,

P = Distance center to center of tracks.

Different Number Frogs —

$$x = \frac{(N + N')}{2}(P - 2G) - \frac{P}{8}\left(\frac{N + N'}{NN'}\right).$$

Frog Distances *Concentric Curved* tracks same as for straight tracks with curve in rails between heels of frogs.

Waterways, Area of. —

Sq. ft. of opening required $= C\sqrt{\text{Drainage Area in acres}}$.

= 1 for gently rolling prairie,

= 1.5 for hilly ground,

= 4.0 in mountainous and rocky ground.

— Meyer's Formula.

Sq. ft. of opening required $= C\sqrt[4]{(\text{Drainage Area in acres})^3}$.

$C = \frac{1}{5}$ to $\frac{1}{8}$ or less for very long valleys and no accumulating snows,

$= \frac{1}{3} \pm$ for rolling agricultural country subject to floods from melting snow and for valleys of lengths of 3 or 4 times their widths,

$= \frac{2}{3}$ to 1 for steep and rocky ground. — A. N. Talbot's Formula.

Meyer's formula is said to give too large waterways for small areas. Talbot's formula is said to give rather small waterways, so that there will be occasional discharge under head.

Abstracted from "Elements of Railroad Engineering," by W. G. Raymond.

The Illinois Central Railroad uses Talbot's formula with the following coefficients:

$$\begin{aligned} C &= 1. \text{ for steep ground} \\ &= \tfrac{2}{3} \text{ for moderately steep ground} \\ &= \tfrac{1}{3} \text{ for rolling ground} \\ &= \tfrac{1}{5} \text{ for flat farm lands.} \end{aligned}$$

These coefficients with Talbot's formula form the basis of table given later.

In practice Talbot's formula and the coefficients given above serve satisfactorily as an aid to judgment in determining the size of waterways, especially for new work. Plain, common sense and intelligent observation at the site of the proposed waterway in times of heavy continued rains are the best guide for determining the proper area of opening. Opportunity for observation of the flow at the opening is not always possible, but should not be neglected when it is. In placing permanent structures under existing work, the actual volume and run-off of floods may and should be studied. From a series of careful observations the proper area of opening may be more correctly determined than by use of any formula.

TABLES

TABLE 1

CONVERSION TABLES

Acres = 0.000022957 × sq. ft.
= 0.00625 × sq. rods.
= 0.10 × sq. chains.
Acres × 43560 = sq. ft.
× 160 = sq. rods.
× 10 = sq. chains.
Brass (cast), pounds of = 504 × cu. ft.
= 0.29167 × cu. in.
Brass (rolled), pounds of = 524 × cu. ft.
= 0.30324 × cu. in.
Bushels, U. S. = 0.80356 × cu. ft.
Bushels, U. S. × 1.24446 = cu. ft.
Copper (cast), pounds of = 542 × cu. ft.
= 0.31365 cu. in.
Copper (rolled), pounds of = 555 × cu. ft.
= 0.32118 × cu. in.
Coal, anthracite, average, solid, pounds of = 95 × cu. ft.
average, loose, pounds of = 53 × cu. ft.
Coal, bituminous, average, solid, pounds of = 83 × cu. ft.
average, loose, pounds of = 49 × cu. ft.
Chestnut (Dry), pounds of = 41 × cu. ft.
gross tons of = 1.525 × M Ft. B.M.
short tons of = 1.708 × M Ft. B.M.
Earth, average pounds of = 100 × cu. ft.
Gallons, U. S. = 7.48052 × cu. ft.
= 0.004329 × cu. in.
Gallons, U. S. × 0.133681 = cu. ft.
× 231 = cu. in.
Lead, pounds of = 709.6 × cu. ft.
= 0.41065 × cu. in.
Masonry, stone (average), pounds of = 150 × cu. ft.
brick (average), pounds of = 125 × cu. ft.
Miles = 0.00018939 × ft.
= 0.0005682 × yards.
= 0.0031250 × rods.
Miles × 5280 = feet
× 1760 = yards.
× 320 = rods.
Oak, live white, pounds of = 48 × cu. ft.
gross tons of = 1.7857 × M Ft. B.M.
short tons of = 2.0 × M Ft. B.M.

Oak, red and black.	pounds of	= 40 × cu. ft.
	gross tons of	= 1.4881 × M Ft. B.M.
	short tons of	= 1.6667 × M Ft. B.M.
Pine, southern yellow.	pounds of	= 45 × cu. ft.
	gross tons of	= 1.6741 × M Ft. B.M.
	short tons of	= 1.875 × M Ft. B.M.
Pine, southern yellow unseasoned heart wood	pounds of	= 65 × cu. ft.
	gross tons of	= 2.4181 × M Ft. B.M.
	short tons of	= 2.7083 × M Ft. B.M.
Sand and gravel, average.	pounds of	= 110 × cu. ft.
	gross tons of	= 1.326 × cu. yds.
	short tons of	= 1.485 × cu. yds.
Steel and iron (cast).	pounds of	= 450 × cu. ft.
		= 0.26042 × cu. in.
Steel and iron, wrought.	pounds of	= 490 × cu. ft.
		= 0.28357 × cu. in.
Stone, limestone, solid.	pounds of	= 168 × cu. ft.
sandstone, solid.	pounds of	= 150 × cu. ft.
slate, solid.	pounds of	= 175 × cu. ft.
Timber, gross tons of		= 0.0372024 × lbs. per cu. ft. × M Ft. B.M.
short tons of		= 0.0416667 × lbs. per cu. ft. × M Ft. B.M.
Tons, gross		= 0.00044643 × lbs.
short		= 0.0005 × lbs.
Water.	pounds of	= 8.34545 × U. S. gallons
		= 62.4283 × cu. ft.
		= 0.0361275 × cu. in.
Velocity, miles per hour		= 0.0113636 × ft. per min.
		= 0.6818 × ft. per sec.
		= 60 × ft. per sec.

TABLE 2

Conversion of Decimals of an Inch into Inches

	.0078		.1328		.2578		.3828		.5078		.6328		.7578		.8828
1/64		9/64		17/64		25/64		33/64		41/64		49/64		57/64	
	.0234		.1485		.2735		.3985		.5235		.6485		.7735		.8985
1/32		5/32		9/32		13/32		17/32		21/32		25/32		29/32	
	.0391		.1641		.2891		.4141		.5391		.6641		.7891		.9141
3/64		11/64		19/64		27/64		35/64		43/64		51/64		59/64	
	.0547		.1797		.3047		.4297		.5547		.6797		.8047		.9247
1/16		3/16		5/16		7/16		9/16		11/16		13/16		15/16	
	.0703		.1953		.3203		.4453		.5703		.6953		.8203		.9453
5/64		13/64		21/64		29/64		37/64		45/64		53/64		61/64	
	.0859		.2110		.3360		.4610		.5860		.7110		.8360		.9610
3/32		7/32		11/32		15/32		19/32		23/32		27/32		31/32	
	.1016		.2266		.3516		.4766		.6016		.7266		.8516		.9716
7/64		15/64		23/64		31/64		39/64		47/64		55/64		63/64	
	.1172		.2422		.3672		.4922		.6172		.7422		.8672		.9922
1/8		1/4		3/8		1/2		5/8		3/4		7/8		1	
	.1328		.2578		.3828		.5078		.6328		.7578		.8828		1.0078

TABLE 3

Conversion of Decimals of a Foot into Inches

Inches	Feet	Inches	Feet	Inches	Feet	Inches	Feet	Inches	Feet	Inches	Feet	Inches	Feet	Inches	Feet	Inches	Feet	Inches	Feet	Inches	Feet	Inches	Feet
	.0026		.0859		.1693		.2526		.3359		.4193		.5026		.5859		.6693		.7526		.8359		.9193
1/16	.0078	1 1/16	.0911	2 1/16	.1745	3 1/16	.2578	4 1/16	.3411	5 1/16	.4245	6 1/16	.5078	7 1/16	.5911	8 1/16	.6745	9 1/16	.7578	10 1/16	.8411	11 1/16	.9245
1/8	.0130	1 1/8	.0964	2 1/8	.1797	3 1/8	.2630	4 1/8	.3464	5 1/8	.4297	6 1/8	.5130	7 1/8	.5964	8 1/8	.6797	9 1/8	.7630	10 1/8	.8464	11 1/8	.9297
3/16	.0182	1 3/16	.1016	2 3/16	.1849	3 3/16	.2682	4 3/16	.3516	5 3/16	.4349	6 3/16	.5182	7 3/16	.6016	8 3/16	.6849	9 3/16	.7682	10 3/16	.8516	11 3/16	.9349
1/4	.0234	1 1/4	.1068	2 1/4	.1901	3 1/4	.2734	4 1/4	.3568	5 1/4	.4401	6 1/4	.5234	7 1/4	.6068	8 1/4	.6901	9 1/4	.7734	10 1/4	.8568	11 1/4	.9401
5/16	.0286	1 5/16	.1120	2 5/16	.1953	3 5/16	.2786	4 5/16	.3620	5 5/16	.4453	6 5/16	.5286	7 5/16	.6120	8 5/16	.6953	9 5/16	.7786	10 5/16	.8620	11 5/16	.9453
3/8	.0339	1 3/8	.1172	2 3/8	.2005	3 3/8	.2839	4 3/8	.3672	5 3/8	.4505	6 3/8	.5339	7 3/8	.6172	8 3/8	.7005	9 3/8	.7839	10 3/8	.8672	11 3/8	.9505
7/16	.0391	1 7/16	.1224	2 7/16	.2057	3 7/16	.2891	4 7/16	.3724	5 7/16	.4557	6 7/16	.5391	7 7/16	.6224	8 7/16	.7057	9 7/16	.7891	10 7/16	.8724	11 7/16	.9557
1/2	.0443	1 1/2	.1276	2 1/2	.2109	3 1/2	.2943	4 1/2	.3776	5 1/2	.4609	6 1/2	.5443	7 1/2	.6276	8 1/2	.7109	9 1/2	.7943	10 1/2	.8776	11 1/2	.9609
9/16	.0495	1 9/16	.1328	2 9/16	.2161	3 9/16	.2995	4 9/16	.3828	5 9/16	.4661	6 9/16	.5495	7 9/16	.6328	8 9/16	.7161	9 9/16	.7995	10 9/16	.8828	11 9/16	.9661
5/8	.0547	1 5/8	.1380	2 5/8	.2214	3 5/8	.3047	4 5/8	.3880	5 5/8	.4714	6 5/8	.5547	7 5/8	.6380	8 5/8	.7214	9 5/8	.8047	10 5/8	.8880	11 5/8	.9714
11/16	.0599	1 11/16	.1432	2 11/16	.2266	3 11/16	.3099	4 11/16	.3932	5 11/16	.4766	6 11/16	.5599	7 11/16	.6432	8 11/16	.7266	9 11/16	.8099	10 11/16	.8932	11 11/16	.9766
3/4	.0651	1 3/4	.1484	2 3/4	.2318	3 3/4	.3151	4 3/4	.3984	5 3/4	.4818	6 3/4	.5651	7 3/4	.6484	8 3/4	.7318	9 3/4	.8151	10 3/4	.8984	11 3/4	.9818
13/16	.0703	1 13/16	.1536	2 13/16	.2370	3 13/16	.3203	4 13/16	.4036	5 13/16	.4870	6 13/16	.5703	7 13/16	.6536	8 13/16	.7370	9 13/16	.8203	10 13/16	.9036	11 13/16	.9870
7/8	.0755	1 7/8	.1589	2 7/8	.2422	3 7/8	.3255	4 7/8	.4089	5 7/8	.4922	6 7/8	.5755	7 7/8	.6589	8 7/8	.7422	9 7/8	.8255	10 7/8	.9089	11 7/8	.9922
15/16	.0807	1 15/16	.1641	2 15/16	.2474	3 15/16	.3307	4 15/16	.4141	5 15/16	.4974	6 15/16	.5807	7 15/16	.6641	8 15/16	.7474	9 15/16	.8307	10 15/16	.9141	11 15/16	.9974
1	.0859	2	.1693	3	.2526	4	.3359	5	.4193	6	.5026	7	.5859	8	.6693	9	.7526	10	.8359	11	.9193	12	1.0026

TABLE 4

Conversion of Linear Feet into Miles

Decimals of One Mile

Miles	Feet	Miles	Feet	Miles	Feet	Miles	Feet
0.01	26.4	0.26	1346.4	0.51	2666.4	0.76	3986.4
0.02	79.2	0.27	1399.2	0.52	2719.2	0.77	4039.2
0.03	132.0	0.28	1452.0	0.53	2772.0	0.78	4092.0
0.04	184.8	0.29	1504.8	0.54	2824.8	0.79	4144.8
0.05	237.6	0.30	1557.6	0.55	2877.6	0.80	4197.6
0.06	290.4	0.31	1601.4	0.56	2930.4	0.81	4250.4
0.07	343.2	0.32	1663.2	0.57	2983.2	0.82	4303.2
0.08	396.0	0.33	1760.0	0.58	3036.0	0.83	4356.0
0.09	448.8	0.34	1768.8	0.59	3088.8	0.84	4408.8
0.10	501.6	0.35	1821.6	0.60	3141.6	0.85	4461.6
0.11	554.4	0.36	1874.4	0.61	3194.4	0.86	4514.4
0.12	607.2	0.37	1927.2	0.62	3247.2	0.87	4567.2
0.13	660.0	0.38	1983.0	0.63	3300.0	0.88	4620.0
0.14	712.8	0.39	2032.8	0.64	3352.8	0.89	4672.8
0.15	765.6	0.40	2085.6	0.65	3405.6	0.90	4725.6
0.16	818.4	0.41	2138.4	0.66	3458.4	0.91	4778.4
0.17	871.2	0.42	2191.2	0.67	3511.2	0.92	4831.2
0.18	924.0	0.43	2244.0	0.68	3564.0	0.93	4884.0
0.19	976.8	0.44	2296.8	0.69	3616.8	0.94	4936.8
0.20	1029.6	0.45	2349.6	0.70	3669.6	0.95	4989.6
0.21	1082.4	0.46	2402.4	0.71	3722.4	0.96	5042.4
0.22	1135.2	0.47	2455.2	0.72	3775.2	0.97	5095.2
0.23	1188.0	0.48	2508.0	0.73	3828.0	0.98	5148.0
0.24	1240.8	0.49	2560.8	0.74	3880.8	0.99	5200.8
0.25	1293.6	0.50	2613.6	0.75	3933.6	1.00	5253.6
	1346.4		2666.4		3986.4		5306.4

TABLE 4 — *Continued*

Conversion of Linear Feet into Miles							
Multiples of One Mile							
Miles	Feet	Miles	Feet	Miles	Feet	Miles	Feet
1.0	5280	26.0	137280	51.0	269280	76.0	401280
2.0	10560	27.0	142560	52.0	274560	77.0	406560
3.0	15840	28.0	147840	53.0	278840	78.0	411840
4.0	21120	29.0	153120	54.0	285120	79.0	417120
5.0	26400	30.0	158400	55.0	290400	80.0	422400
6.0	31680	31.0	163680	56.0	295680	81.0	427680
7.0	36960	32.0	168960	57.0	300960	82.0	432960
8.0	42240	33.0	174240	58.0	306240	83.0	438240
9.0	47520	34.0	179520	59.0	311520	84.0	443520
10.0	52800	35.0	184800	60.0	316800	85.0	448800
11.0	58080	36.0	190080	61.0	322080	86.0	454080
12.0	63360	37.0	195360	62.0	327360	87.0	459360
13.0	68640	38.0	200640	63.0	332640	88.0	464640
14.0	73920	39.0	205920	64.0	337920	89.0	469920
15.0	79200	40.0	211200	65.0	343200	90.0	475200
16.0	84480	41.0	216480	66.0	348480	91.0	480480
17.0	89760	42.0	221760	67.0	353760	92.0	485760
18.0	95040	43.0	227040	68.0	359040	93.0	491040
19.0	100320	44.0	232320	69.0	364320	94.0	496320
20.0	105600	45.0	237600	70.0	369600	95.0	501600
21.0	110880	46.0	242880	71.0	374880	96.0	506880
22.0	116160	47.0	248160	72.0	380160	97.0	512160
23.0	121440	48.0	253440	73.0	385440	98.0	517440
24.0	126720	49.0	258720	74.0	390720	99.0	522720
25.0	132000	50.0	264000	75.0	396000	100.0	528000

TABLE 5

Conversion of Linear Miles of 100 Ft. Wide Right-of-Way into Acres									
Acres	Miles	Acres	Miles	Acres	Miles	Acres	Miles	Acres	Miles
12.12	1.0	36.36	3.0	60.61	5.0	84.85	7.0	109.09	9.0
24.24	2.0	48.48	4.0	72.73	6.0	96.97	8.0	121.21	10.0

TABLE 5 — *Continued*

Conversion of Linear Feet of 100 Ft. Wide Right-of-Way into Acres

Acres	Lin. Ft. R. of W.	Acres	Lin. Ft. R. of W.	Acres	Lin. Ft. R. of W.	Acres	Lin. Ft. R. of W.
1.0	435.6	11.0	4791.6	21.0	9147.6	31.0	13503.6
2.0	871.2	12.0	5227.2	22.0	9583.2	32.0	13939.2
3.0	1306.8	13.0	5662.8	23.0	10018.8	33.0	14374.8
4.0	1742.4	14.0	6098.4	24.0	10454.4	34.0	14810.4
5.0	2178.0	15.0	6534.0	25.0	10890.0	35.0	15246.0
6.0	2613.6	16.0	6969.6	26.0	11325.6	36.0	15681.6
7.0	3049.2	17.0	7405.2	27.0	11761.2	37.0	16117.2
8.0	3484.8	18.0	7840.8	28.0	12196.8	38.0	16552.8
9.0	3920.4	19.0	8276.4	29.0	12632.4	39.0	16988.4
10.0	4356.0	20.0	8712.0	30.0	13068.0	40.0	17424.0

Acres	Lin. Ft.	Acres	Lin. Ft.	Acres	Lin. Ft.	Acres	Lin. Ft.	Acres	Lin. Ft.
	2.2		89.3		176.4		263.5		350.7
0.01		0.21		0.41		0.61		0.81	
	6.5		93.7		180.8		267.9		355.0
0.02		0.22		0.42		0.62		0.82	
	10.9		98.0		185.1		272.3		359.4
0.03		0.23		0.43		0.63		0.83	
	15.2		102.4		189.5		276.6		363.7
0.04		0.24		0.44		0.64		0.84	
	19.6		106.7		193.8		281.0		368.1
0.05		0.25		0.45		0.65		0.85	
	24.0		111.1		198.2		285.3		372.4
0.06		0.26		0.46		0.66		0.86	
	28.3		115.4		202.6		289.7		376.8
0.07		0.27		0.47		0.67		0.87	
	32.7		119.8		206.9		294.0		381.2
0.08		0.28		0.48		0.68		0.88	
	37.0		124.1		211.3		298.4		385.5
0.09		0.29		0.49		0.69		0.89	
	41.4		128.5		215.6		302.7		389.9
0.10		0.30		0.50		0.70		0.90	
	45.7		132.9		220.0		307.1		394.2
0.11		0.31		0.51		0.71		0.91	
	50.1		137.2		224.3		311.5		398.6
0.12		0.32		0.52		0.72		0.92	
	54.5		141.6		228.7		315.8		402.9
0.13		0.33		0.53		0.73		0.93	
	58.8		145.9		233.0		320.2		407.3
0.14		0.34		0.54		0.74		0.94	
	63.2		150.3		237.4		324.5		411.6
0.15		0.35		0.55		0.75		0.95	
	67.5		154.6		241.8		328.9		416.0
0.16		0.36		0.56		0.76		0.96	
	71.9		159.0		246.1		333.2		420.4
0.17		0.37		0.57		0.77		0.97	
	76.2		163.4		250.5		337.6		424.7
0.18		0.38		0.58		0.78		0.98	
	80.6		167.7		254.8		341.9		429.1
0.19		0.39		0.59		0.79		0.99	
	84.9		172.1		259.2		346.3		433.4
0.20		0.40		0.60		0.80		1.00	
	89.3		176.4		263.5		350.7		437.8

TABLE 6

Reduction of Rise in Feet per Mile to Rate per Cent of Grade

Rate per Cent of Grade.	Rise in Feet per Mile	Rate per Cent of Grade.	Rise in Feet per Mile.	Rate per Cent of Grade	Rise in Feet per Mile.	Rate per Cent of Grade	Rise in Feet per Mile	Rate per Cent of Grade	Rise in Feet per Mile
1.00	52.80	3.00	158.40	5.00	264.00	7.00	369.60	9.00	475.20
2.00	105.60	4.00	211.20	6.00	316.80	8.00	422.40	10.00	528.00
	0.264		10.824		21.384		31.944		42.504
0.01		0.21		0.41		0.61		0.81	
	0.792		11.352		21.912		32.472		43.032
0.02		0.22		0.42		0.62		0.82	
	1.320		11.880		22.440		33.000		43.560
0.03		0.23		0.43		0.63		0.83	
	1.848		12.408		22.968		33.528		44.088
0.04		0.24		0.44		0.64		0.84	
	2.376		12.936		23.496		34.056		44.616
0.05		0.25		0.45		0.65		0.85	
	2.904		13.464		24.024		34.584		45.144
0.06		0.26		0.46		0.66		0.86	
	3.432		13.992		24.552		35.112		45.672
0.07		0.27		0.47		0.67		0.87	
	3.960		14.520		25.080		35.640		46.200
0.08		0.28		0.48		0.68		0.88	
	4.488		15.048		25.608		36.168		46.728
0.09		0.29		0.49		0.69		0.89	
	5.016		15.576		26.136		36.696		47.256
0.10		0.30		0.50		0.70		0.90	
	5.544		16.104		26.664		37.224		47.784
0.11		0.31		0.51		0.71		0.91	
	6.072		16.632		27.192		37.752		48.312
0.12		0.32		0.52		0.72		0.92	
	6.600		17.160		27.720		38.280		48.840
0.13		0.33		0.53		0.73		0.93	
	7.128		17.688		28.248		38.808		49.368
0.14		0.34		0.54		0.74		0.94	
	7.656		18.216		28.776		39.336		49.896
0.15		0.35		0.55		0.75		0.95	
	8.184		18.744		29.304		39.864		50.424
0.16		0.36		0.56		0.76		0.96	
	8.712		19.272		29.832		40.392		50.952
0.17		0.37		0.57		0.77		0.97	
	9.240		19.800		30.360		40.920		51.480
0.18		0.38		0.58		0.78		0.98	
	9.768		20.328		30.888		41.448		52.008
0.19		0.39		0.59		0.79		0.99	
	10.296		20.856		31.416		41.976		52.536
0.20		0.40		0.60		0.80		1.00	
	10.824		21.384		31.944		42.504		53.064

TABLE 7

Conversion of Pounds into Tons

Tons	Pounds	Tons	Pounds	Tons	Pounds	Tons	Pounds
1.	2240.	6.	13440.	11.	24640.	16.	35840.
2.	4480.	7.	15680.	12.	26880.	17.	38080.
3.	6720.	8.	17920.	13.	29120.	18.	40320.
4.	8960.	9.	20160.	14.	31360.	19.	42560.
5.	11200.	10.	22400.	15.	33600.	20.	44800.
	11.2		571.2		1131.2		1691.2
0.01		0.26		0.51		0.76	
	33.6		593.6		1153.6		1713.6
0.02		0.27		0.52		0.77	
	56.0		616.0		1176.0		1736.0
0.03		0.28		0.53		0.78	
	78.4		638.4		1198.4		1758.4
0.04		0.29		0.54		0.79	
	100.8		660.8		1220.8		1780.8
0.05		0.30		0.55		0.80	
	123.2		683.2		1243.2		1803.2
0.06		0.31		0.56		0.81	
	145.6		705.6		1265.6		1825.6
0.07		0.32		0.57		0.82	
	168.0		728.0		1288.0		1848.0
0.08		0.33		0.58		0.83	
	190.4		750.4		1310.4		1870.4
0.09		0.34		0.59		0.84	
	212.8		772.8		1332.8		1892.8
0.10		0.35		0.60		0.85	
	235.2		795.2		1355.2		1915.2
0.11		0.36		0.61		0.86	
	257.6		817.6		1377.6		1937.6
0.12		0.37		0.62		0.87	
	280.0		840.0		1400.0		1960.0
0.13		0.38		0.63		0.88	
	302.4		862.4		1422.4		1982.4
0.14		0.39		0.64		0.89	
	324.8		884.8		1444.8		2004.8
0.15		0.40		0.65		0.90	
	347.2		907.4		1467.2		2027.2
0.16		0.41		0.66		0.91	
	369.6		929.6		1489.6		2049.6
0.17		0.42		0.67		0.92	
	392.0		952.0		1512.0		2072.0
0.18		0.43		0.68		0.93	
	414.4		974.4		1534.4		2094.4
0.19		0.44		0.69		0.94	
	436.8		996.8		1556.8		2116.8
0.20		0.45		0.70		0.95	
	459.2		1019.2		1579.2		2139.2
0.21		0.46		0.71		0.96	
	481.6		1041.6		1601.6		2161.6
0.22		0.47		0.72		0.97	
	504.0		1064.0		1624.0		2184.0
0.23		0.48		0.73		0.98	
	526.4		1086.4		1646.4		2206.4
0.24		0.49		0.74		0.99	
	548.8		1108.8		1668.8		2228.8
0.25		0.50		0.75		1.00	
	571.2		1131.2		1691.2		2251.2

TABLE 8

Seconds in Decimals of a Degree

Sec.	Degrees	Sec.	Degrees	Sec.	Degrees	Sec.	Degrees	Sec.	Degrees	Sec.	Degrees
1	0.00028	11	0.00306	21	0.00584	31	0.00862	41	0.01139	51	0.01417
2	0.00056	12	0.00334	22	0.00612	32	0.00890	42	0.01167	52	0.01445
3	0.00083	13	0.00361	23	0.00639	33	0.00917	43	0.01195	53	0.01473
4	0.00111	14	0.00389	24	0.00667	34	0.00945	44	0.01222	54	0.01500
5	0.00139	15	0.00417	25	0.00695	35	0.00973	45	0.01250	55	0.01528
6	0.00167	16	0.00445	26	0.00723	36	0.01000	46	0.01278	56	0.01556
7	0.00195	17	0.00473	27	0.00751	37	0.01028	47	0.01306	57	0.01584
8	0.00222	18	0.00500	28	0.00778	38	0.01056	48	0.01334	58	0.01612
9	0.00250	19	0.00528	29	0.00806	39	0.01083	49	0.01361	59	0.01639
10	0.00278	20	0.00556	30	0.00834	40	0.01111	50	0.01389	60	0.01667

TABLE 9

Minutes in Decimals of a Degree

Min.	Degrees	Min.	Degrees	Min.	Degrees	Min.	Degrees	Min.	Degrees	Min.	Degrees
1	0.01667	11	0.18333	21	0.35000	31	0.51667	41	0.68333	51	0.85000
2	0.03333	12	0.20000	22	0.36667	32	0.53333	42	0.70000	52	0.86667
3	0.05000	13	0.21667	23	0.38333	33	0.55000	43	0.71667	53	0.88333
4	0.06667	14	0.23333	24	0.40000	34	0.56667	44	0.73333	54	0.90000
5	0.08333	15	0.25000	25	0.41667	35	0.58333	45	0.75000	55	0.91667
6	0.10000	16	0.26667	26	0.43333	36	0.60000	46	0.76667	56	0.93333
7	0.11667	17	0.28333	27	0.45000	37	0.61667	47	0.78333	57	0.95000
8	0.13333	18	0.30000	28	0.46667	38	0.63333	48	0.80000	58	0.96667
9	0.15000	19	0.31667	29	0.48333	39	0.65000	49	0.81667	59	0.98333
10	0.16667	20	0.33333	30	0.50000	40	0.66667	50	0.83333	60	1.00000

TABLE 10

Conversion of Minutes and Seconds into Decimals of a Degree

Deg.	Min.	Sec.	Deg.	Min.	Sec.	Deg.	Min.	Sec.	Deg.	Min.	Sec.
0.0025	00	04.5	0.1025	06	04.5	0.2025	12	04.5	0.3025	18	04.5
0.005	00	13.5	0.105	06	13.5	0.205	12	13.5	0.305	18	13.5
0.0075	00	22.5	0.1075	06	22.5	0.2075	12	22.5	0.3075	18	22.5
0.01	00	31.5	0.11	06	31.5	0.21	12	31.5	0.31	18	31.5
0.0125	00	40.5	0.1125	06	40.5	0.2125	12	40.5	0.3125	18	40.5
0.015	00	49.5	0.115	06	49.5	0.215	12	49.5	0.315	18	49.5
0.0175	00	58.5	0.1175	06	58.5	0.2175	12	58.5	0.3175	18	58.5
0.02	01	07.5	0.12	07	07.5	0.22	13	07.5	0.32	19	07.5
0.0225	01	16.5	0.1225	07	16.5	0.2225	13	16.5	0.3225	19	16.5
0.025	01	25.5	0.125	07	25.5	0.225	13	25.5	0.325	19	25.5
0.0275	01	34.5	0.1275	07	34.5	0.2275	13	34.5	0.3275	19	34.5
0.03	01	43.5	0.13	07	43.5	0.23	13	43.5	0.33	19	43.5
0.0325	01	52.5	0.1325	07	52.5	0.2325	13	52.5	0.3325	19	52.5
0.035	02	01.5	0.135	08	01.5	0.235	14	01.5	0.335	20	01.5
0.0375	02	10.5	0.1375	08	10.5	0.2375	14	10.5	0.3375	20	10.5
0.04	02	19.5	0.14	08	19.5	0.24	14	19.5	0.34	20	19.5
0.0425	02	28.5	0.1425	08	28.5	0.2425	14	28.5	0.3425	20	28.5
0.045	02	37.5	0.145	08	37.5	0.245	14	37.5	0.345	20	37.5
0.0475	02	46.5	0.1475	08	46.5	0.2475	14	46.5	0.3475	20	46.5
0.05	02	55.5	0.15	08	55.5	0.25	14	55.5	0.35	20	55.5
0.0525	03	04.5	0.1525	09	04.5	0.2525	15	04.5	0.3525	21	04.5
0.055	03	13.5	0.155	09	13.5	0.255	15	13.5	0.355	21	13.5
0.0575	03	22.5	0.1575	09	22.5	0.2575	15	22.5	0.3575	21	22.5
0.06	03	31.5	0.16	09	31.5	0.26	15	31.5	0.36	21	31.5
0.0625	03	40.5	0.1625	09	40.5	0.2625	15	40.5	0.3625	21	40.5
0.065	03	49.5	0.165	09	49.5	0.265	15	49.5	0.365	21	49.5
0.0675	03	58.5	0.1675	09	58.5	0.2675	15	58.5	0.3675	21	58.5
0.07	04	07.5	0.17	10	07.5	0.27	16	07.5	0.37	22	07.5
0.0725	04	16.5	0.1725	10	16.5	0.2725	16	16.5	0.3725	22	16.5
0.075	04	25.5	0.175	10	25.5	0.275	16	25.5	0.375	22	25.5
0.0775	04	34.5	0.1775	10	34.5	0.2775	16	34.5	0.3775	22	34.5
0.08	04	43.5	0.18	10	43.5	0.28	16	43.5	0.38	22	43.5
0.0825	04	52.5	0.1825	10	52.5	0.2825	16	52.5	0.3825	22	52.5
0.085	05	01.5	0.185	11	01.5	0.285	17	01.5	0.385	23	01.5
0.0875	05	10.5	0.1875	11	10.5	0.2875	17	10.5	0.3875	23	10.5
0.09	05	19.5	0.19	11	19.5	0.29	17	19.5	0.39	23	19.5
0.0925	05	28.5	0.1925	11	28.5	0.2925	17	28.5	0.3925	23	28.5
0.095	05	37.5	0.195	11	37.5	0.295	17	37.5	0.395	23	37.5
0.0975	05	46.5	0.1975	11	46.5	0.2975	17	46.5	0.3975	23	46.5
0.1	05	55.5	0.2	11	55.5	0.3	17	55.5	0.4	23	55.5
	06	04.5		12	04.5		18	04.5		24	04.5

TABLE 10 — *Continued*

Conversion of Minutes and Seconds into Decimals of a Degree

Deg.	Min.	Sec.	Deg.	Min.	Sec.	Deg.	Min.	Sec.	Deg.	Min.	Sec.
0.4025	24	04.5	0.5025	30	04.5	0.6025	36	04.5	0.7025	42	04.5
0.405	24	13.5	0.505	30	13.5	0.605	36	13.5	0.705	42	13.5
0.4075	24	22.5	0.5075	30	22.5	0.6075	36	22.5	0.7075	42	22.5
0.41	24	31.5	0.51	30	31.5	0.61	36	31.5	0.71	42	31.5
0.4125	24	40.5	0.5125	30	40.5	0.6125	36	40.5	0.7125	42	40.5
0.415	24	49.5	0.515	30	49.5	0.615	36	49.5	0.715	42	49.5
0.4175	24	58.5	0.5175	30	58.5	0.6175	36	58.5	0.7175	42	58.5
0.42	25	07.5	0.52	31	07.5	0.62	37	07.5	0.72	43	07.5
0.4225	25	16.5	0.5225	31	16.5	0.6225	37	16.5	0.7225	43	16.5
0.425	25	25.5	0.525	31	25.5	0.625	37	25.5	0.725	43	25.5
0.4275	25	34.5	0.5275	31	34.5	0.6275	37	34.5	0.7275	43	34.5
0.43	25	43.5	0.53	31	43.5	0.63	37	43.5	0.73	43	43.5
0.4325	25	52.5	0.5325	31	52.5	0.6325	37	52.5	0.7325	43	52.5
0.435	26	01.5	0.535	32	01.5	0.635	38	01.5	0.735	44	01.5
0.4375	26	10.5	0.5375	32	10.5	0.6375	38	10.5	0.7375	44	10.5
0.44	26	19.5	0.54	32	19.5	0.64	38	19.5	0.74	44	19.5
0.4425	26	28.5	0.5425	32	28.5	0.6425	38	28.5	0.7425	44	28.5
0.445	26	37.5	0.545	32	37.5	0.645	38	37.5	0.745	44	37.5
0.4475	26	46.5	0.5475	32	46.5	0.6475	38	46.5	0.7475	44	46.5
0.45	26	55.5	0.55	32	55.5	0.65	38	55.5	0.75	44	55.5
0.4525	27	04.5	0.5525	33	04.5	0.6525	39	04.5	0.7525	45	04.5
0.455	27	13.5	0.555	33	13.5	0.655	39	13.5	0.755	45	13.5
0.4575	27	22.5	0.5575	33	22.5	0.6575	39	22.5	0.7575	45	22.5
0.46	27	31.5	0.56	33	31.5	0.66	39	31.5	0.76	45	31.5
0.4625	27	40.5	0.5625	33	40.5	0.6625	39	40.5	0.7625	45	40.5
0.465	27	49.5	0.565	33	49.5	0.665	39	49.5	0.765	45	49.5
0.4675	27	58.5	0.5675	33	58.5	0.6675	39	58.5	0.7675	45	58.5
0.47	28	07.5	0.57	34	07.5	0.67	40	07.5	0.77	46	07.5
0.4725	28	16.5	0.5725	34	16.5	0.6725	40	16.5	0.7725	46	16.5
0.475	28	25.5	0.575	34	25.5	0.675	40	25.5	0.775	46	25.5
0.4775	28	34.5	0.5775	34	34.5	0.6775	40	34.5	0.7775	46	34.5
0.48	28	43.5	0.58	34	43.5	0.68	40	43.5	0.78	46	43.5
0.4825	28	52.5	0.5825	34	52.5	0.6825	40	52.5	0.7825	46	52.5
0.485	29	01.5	0.585	35	01.5	0.685	41	01.5	0.785	47	01.5
0.4875	29	10.5	0.5875	35	10.5	0.6875	41	10.5	0.7875	47	10.5
0.49	29	19.5	0.59	35	19.5	0.69	41	19.5	0.79	47	19.5
0.4925	29	28.5	0.5925	35	28.5	0.6925	41	28.5	0.7925	47	28.5
0.495	29	37.5	0.595	35	37.5	0.695	41	37.5	0.795	47	37.5
0.4975	29	46.5	0.5975	35	46.5	0.6975	41	46.5	0.7975	47	46.5
0.5	29	55.5	0.6	35	55.5	0.7	41	55.5	0.8	47	55.5
	30	04.5		36	04.5		42	04.5		48	04.5

TABLE 10 — *Continued*

Conversion of Minutes and Seconds into Decimals of a Degree

Deg.	Min. Sec.	Deg.	Min. Sec.
0.8025	48 04.5	0.9025	54 04.5
0.805	48 13.5	0.905	54 13.5
0.8075	48 22.5	0.9075	54 22.5
0.81	48 31.5	0.91	54 31.5
0.8125	48 40.5	0.9125	54 40.5
0.815	48 49.5	0.915	54 49.5
0.8175	48 58.5	0.9175	54 58.5
0.82	49 07.5	0.92	55 07.5
0.8225	49 16.5	0.9225	55 16.5
0.825	49 25.5	0.925	55 25.5
0.8275	49 34.5	0.9275	55 34.5
0.83	49 43.5	0.93	55 43.5
0.8325	49 52.5	0.9325	55 52.5
0.835	50 01.5	0.935	56 01.5
0.8375	50 10.5	0.9375	56 10.5
0.84	50 19.5	0.94	56 19.5
0.8425	50 28.5	0.9425	56 28.5
0.845	50 37.5	0.945	56 37.5
0.8475	50 46.5	0.9475	56 46.5
0.85	50 55.5	0.95	56 55.5
0.8525	51 04.5	0.9525	57 04.5
0.855	51 13.5	0.955	57 13.5
0.8575	51 22.5	0.6575	57 22.5
0.86	51 31.5	0.96	57 31.5
0.8625	51 40.5	0.9625	57 40.5
0.865	51 49.5	0.965	57 49.5
0.8675	51 58.5	0.9675	57 58.5
0.87	52 07.5	0.97	58 07.5
0.8725	52 16.5	0.9725	58 16.5
0.875	52 25.5	0.975	58 25.5
0.8775	52 34.5	0.9775	58 34.5
0.88	52 43.5	0.98	58 43.5
0.8825	52 52.5	0.9825	58 52.5
0.885	53 01.5	0.985	59 01.5
0.8875	53 10.5	0.9875	59 10.5
0.89	53 19.5	0.99	59 19.5
0.8925	53 28.5	0.9925	59 28.5
0.895	53 37.5	0.995	59 37.5
0.8975	53 46.5	0.9975	59 46.5
0.9	53 55.5	1.0	59 55.5
	54 04.5		60 04.5

TABLE 11

MIDDLE ORDINATE FOR CURVING RAIL

Ordinate Given in Inches

Degree of Curve	Length of Rails in Feet											
	10	12	14	16	18	20	22	24	26	28	30	33
0° 30′											1/8	1/8
1°								1/8	1/8	1/8	1/4	1/4
1° 30′					1/8	1/8	1/8	1/8	1/4	1/4	3/8	3/8
2°			1/8	1/8	1/8	1/8	1/4	1/4	3/8	3/8	3/8	5/8
2° 30′			1/8	1/8	1/4	1/4	1/4	3/8	3/8	1/2	1/2	3/4
3°		1/8	1/8	1/8	1/4	1/4	3/8	1/2	1/2	5/8	5/8	7/8
3° 30′		1/8	1/8	1/4	1/4	3/8	3/8	1/2	5/8	3/4	7/8	1
4°	1/8	1/8	1/8	1/4	3/8	3/8	1/2	5/8	3/4	7/8	1	1 1/8
4° 30′	1/8	1/8	1/4	1/4	3/8	1/2	1/2	5/8	3/4	7/8	1	1 1/4
5°	1/8	1/8	1/4	3/8	3/8	1/2	5/8	3/4	7/8	1	1 1/8	1 3/8
5° 30′	1/8	1/4	1/4	3/8	1/2	5/8	3/4	7/8	1	1 1/8	1 1/4	1 5/8
6°	1/8	1/4	3/8	3/8	1/2	5/8	3/4	7/8	1 1/8	1 1/4	1 3/8	1 3/4
6° 30′	1/8	1/4	3/8	1/2	1/2	3/4	7/8	1	1 1/8	1 3/8	1 1/2	1 7/8
7°	1/8	1/4	3/8	1/2	5/8	3/4	7/8	1	1 1/4	1 1/2	1 5/8	2
7° 30′	1/8	1/4	3/8	1/2	5/8	3/4	1	1 1/8	1 3/8	1 1/2	1 3/4	2 1/8
8°	1/4	1/4	3/8	1/2	3/4	7/8	1	1 1/4	1 3/8	1 5/8	1 7/8	2 1/4
8° 30′	1/4	3/8	3/8	5/8	3/4	7/8	1 1/8	1 1/4	1 1/2	1 3/4	2	2 3/8
9°	1/4	3/8	1/2	5/8	3/4	7/8	1 1/8	1 3/8	1 5/8	1 7/8	2 1/8	2 1/2
9° 30′	1/4	3/8	1/2	5/8	3/4	1	1 1/4	1 3/8	1 3/4	2	2 1/4	2 3/4
10°	1/4	3/8	1/2	5/8	7/8	1	1 1/4	1 1/2	1 3/4	2	2 3/8	2 7/8
10° 30′	1/4	3/8	5/8	3/4	7/8	1 1/8	1 3/8	1 5/8	1 7/8	2 1/8	2 1/2	3
11°	1/4	3/8	5/8	3/4	1	1 1/8	1 3/8	1 5/8	2	2 1/4	2 5/8	3 1/8
11° 30′	3/8	1/2	5/8	3/4	1	1 1/4	1 1/2	1 3/4	2 1/8	2 3/8	2 3/4	3 1/4
12°	3/8	1/2	5/8	3/4	1	1 1/4	1 1/2	1 7/8	2 1/8	2 1/2	2 7/8	3 3/8
12° 30′	3/8	1/2	5/8	7/8	1 1/8	1 3/8	1 5/8	2	2 1/4	2 5/8	3	3 5/8
13°	3/8	1/2	5/8	7/8	1 1/8	1 3/8	1 5/8	2	2 1/4	2 5/8	3	3 3/4
13° 30′	3/8	1/2	3/4	1	1 1/4	1 1/2	1 3/4	2 1/8	2 3/8	2 3/4	3 1/8	3 7/8
14°	3/8	1/2	3/4	1	1 1/4	1 1/2	1 3/4	2 1/8	2 1/2	2 7/8	3 1/4	4
14° 30′	3/8	5/8	3/4	1	1 1/4	1 5/8	1 7/8	2 1/4	2 5/8	3	3 3/8	4 1/8
15°	3/8	5/8	3/4	1	1 1/4	1 5/8	1 7/8	2 1/4	2 5/8	3 1/8	3 1/2	4 1/4
15° 30′	3/8	5/8	7/8	1 1/8	1 3/8	1 5/8	2	2 3/8	2 7/8	3 1/4	3 5/8	4 3/8
16°	3/8	5/8	7/8	1 1/8	1 3/8	1 5/8	2	2 3/8	2 7/8	3 1/4	3 3/4	4 5/8

"Rules and Instructions for the Government of Maintenance-of-Way Employees," L. & N. R.R.

TABLE 12

ELEVATION OF OUTER RAIL ON CURVES

Degree of Curve	Velocity in Miles per Hour											Maximum Velocity for which Curves should be Elevated
	10	15	20	25	30	35	40	45	50	55	60	
0° 30′		0¼″	0¼″	0¼″	0¼″	0⅜″	0½″	0¾″	0⅞″	1″	1¼″	
0° 45′		0⅛″	0¼″	0⅜″	0½″	0⅝″	0⅞″	1⅛″	1⅜″	1⅝″	1⅞″	
1° 00′	0⅛″	0⅛″	0¼″	0⅜″	0⅝″	0⅞″	1⅛″	1⅜″	1¾″	2″	2⅜″	
2° 00′	0⅜″	0¼″	0½″	0⅞″	1¼″	1⅝″	2⅛″	2¾″	3⅜″	4⅛″	4⅞″	
3° 00′	0¼″	0½″	0⅞″	1¼″	1⅞″	2¼″	3¼″	4⅛″	5″	6⅛″	7¼″	60
4° 00′	0¼″	0⅝″	1⅛″	1¾″	2½″	3¼″	4¼″	5⅜″	6¾″	8⅛″		50
5° 00′	0⅜″	0¾″	1⅜″	2⅛″	3″	4⅛″	5⅜″	6⅞″				45
6° 00′	0⅜″	0⅞″	1⅝″	2½″	3⅝″	5″	6½″	8⅜″				40
7° 00′	0½″	1″	1⅞″	3″	4¼″	5¾″	7½″					40
8° 00′	0½″	1¼″	2⅛″	3⅜″	4⅞″	6⅝″						35
9° 00′	0⅝″	1⅜″	2⅜″	3¾″	5½″	7⅜″						35
10° 00′	0⅝″	1½″	2¾″	4¼″	6⅛″							30
12° 00′	0¾″	1⅞″	3¼″	5″	7¼″							30
14° 00′	1″	2⅛″	3¾″	5⅞″								25
16° 00′	1⅛″	2⅜″	4⅜″	6¾″								25
18° 00′	1¼″	2¾″	4⅞″	7⅝″								25
20° 00′	1⅜″	3″	5⅜″									20
22° 00′	1½″	3⅜″	5⅞″									20
24° 00′	1⅝″	3⅝″	6½″									20
26° 00′	1¾″	4″	7″									20
28° 00′	1⅞″	4¼″	7½″									20
30° 00′	2″	4½″	8″									20

TABLE 13

GAGE ON CURVES

Degree of Curve	Gage
8° and under	4′ 8½″
9°–10°	4′ 8⅝″
11°–12°	4′ 8¾″
13°–14°	4′ 8⅞″
15°–16°	4′ 9″
17°–18°	4′ 9⅛″
19°–20°	4′ 9¼″

TABLE 14

FROGS AND SWITCH RAILS

Recommended by the American Railway Engineering and Maintenance of Way Association Convention of 1910.

Properties of Frogs Thickness of All Frog Points 0½″								Properties of Switches. For all Switches Thickness of Point = 0¼″ and Heel Distance = H = 6¼″				
N = Frog Number	F = Frog Angle			W = Length Point to Toe	K = Length Point to Heel	Total Length	Spread at Toe	Spread at Heel	S = Length of Switch Rail	a = Switch Angle		
I	II			III	IV	V	VI	VII	VIII	IX		
	Deg.	Min.	Sec.	Ft. In.	Ft. In.	Ft. In.	Ft.	Ft.	Ft. In.	Deg.	Min.	Sec.
4	14	15	00	3 2	5 4	8 6	0.79	1.32	11 0	2	36	19
5	11	25	16	3 7	6 5	10 0	0.71	1.28	11 0	2	36	19
6	9	31	38	4 0	7 0	11 0	0.66	1.16	11 0	2	36	19
7	8	10	16	4 5	8 1	12 6	0.63	1.15	16 6	1	44	11
8	7	09	10	4 9	8 9	13 6	0.59	1.09	16 6	1	44	11
9	6	21	35	6 0	10 0	16 0	0.67	1.11	16 6	1	44	11
9½	6	01	32	6 0	10 0	16 0	0.63	1.05	16 6	1	44	11
10	5	43	29	6 0	10 6	16 6	0.60	1.05	16 6	1	44	11
11	5	12	18	6 0	11 6	17 6	0.54	1.03	22 0	1	18	8
12	4	46	19	6 5	12 1	18 6	0.53	1.01	22 0	1	18	8
15	3	49	06	7 8	14 10	22 6	0.51	0.99	22 0	1	18	8
16	3	34	47	8 0	16 0	24 0	0.50	1.00	33 0	0	52	5
18	3	10	56	8 10	17 8	26 6	0.49	0.98	33 0	0	52	5
20	2	51	51	9 8	19 4	29 0	0.48	0.97	33 0	0	52	5
24	2	23	13	11 4	23 2	34 6	0.47	0.97	33 0	0	52	5

TABLE 15

THEORETICAL SWITCH LEADS

Recommended by the American Railway Engineering and Maintenance of Way Association Convention of 1910

N = Frog Number	Theoretical Leads				
	R = Radius of Center Line	D = Degree of Lead Curve	Distance Point of Switch Rail to Theoretical Point of Frog	Closure Straight Rail	Closure Curved Rail
I	X	XI	XII	XIII	XIV
	Feet	Deg. Min. Sec	Feet	Feet	Feet
4	112.26	52 53 56	37.05	22.88	23.29
5	183.22	31 40 24	42.77	28.19	28.55
6	273.95	21 01 58	48.11	33.11	33.38
7	364.88	15 47 19	61.94	41.02	41.24
8	488.71	11 44 40	67.47	46.22	46.42
9	616.27	9 18 27	72.24	49.74	49.92
9½	699.97	8 11 33	74.90	52.40	52.58
10	790.25	7 15 18	77.51	55.01	55.17
11	940.21	6 05 48	92.06	64.06	64.20
12	1136.34	5 02 38	97.25	68.83	68.96
15	1872.06	3 03 39	111.87	82.20	82.31
16	2005.98	2 51 24	135.95	94.95	95.05
18	2587.66	2 12 52	146.38	104.54	104.61
20	3262.98	1 45 22	156.35	113.68	113.76
24	4932.77	1 09 42	175.09	130.66	130.77

In all cases gage is considered 4′ 8½″.

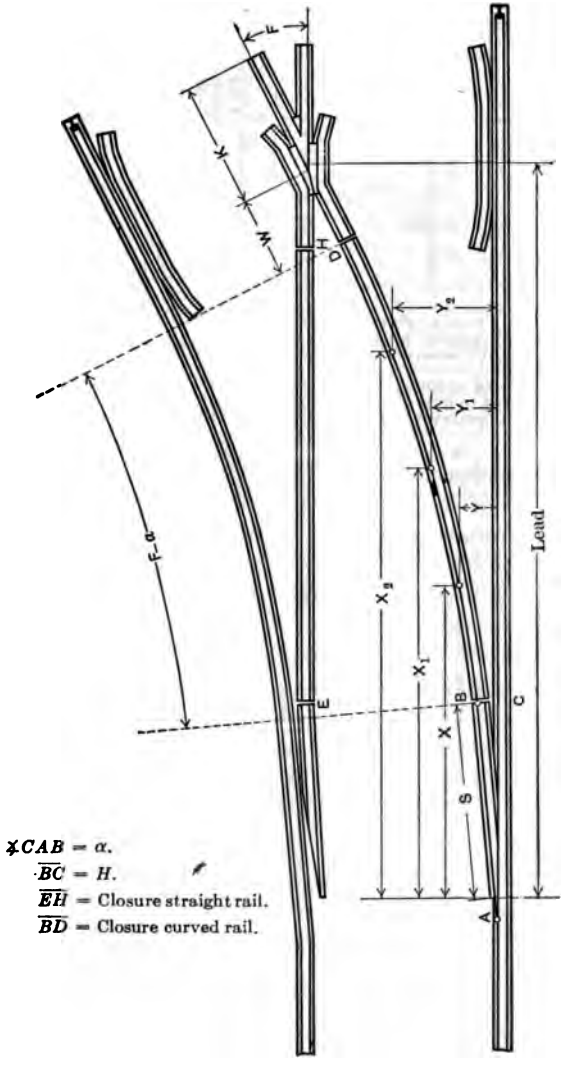

$\measuredangle CAB = \alpha$.
$\overline{BC} = H$.
$\overline{EH}$ = Closure straight rail.
$\overline{BD}$ = Closure curved rail.

Fig. 66.

TABLE 16

PRACTICAL SWITCH LEADS

Recommended by the American Railway Engineering and Maintenance of Way Association Convention of 1910

Practical Leads																	
N = Frog Number	R_1 = Radius of Center Line	D_1 = Degree of Lead Curve	Rectangular Coördinates to the Quarter and Center Points on Gage Side of Curved Rail, Referred to Point of Switch Rail as Origin						T_s = Tangent Adjacent to Switch Rail.	T_F = Tangent Adjacent to Toe of Frog	L_1 = Distance Actual Point of Switch Rail to Theoretical Point of Frog	Lead = Distance Actual Point of Switch Rail to Actual Point of Frog	Closure for Straight Rail			Closure for Curved Rail	
			X	X_1	X_2	Y	Y_1	Y_2									
I	XV	XVI	XVII	XVIII	XIX	XX	XXI	XXII	XXIII	XXIV	XXV	XXVI	XXVII			XVIII	
	Ft.	° ′ ″	Ft.	Ft.	Ft.	Ft.	Ft.	Ft.	Ft.	Ft.	Ft.	Ft.					
4	110.69	53 42 24	17.74	23.44	29.75	0.97	1.67	2.79	1.03	0.00	37.77	37.94	1-23.60			1-24	
5	174.34	33 19 57	17.78	24.54	31.27	0.95	1.61	2.62	0.00	0.82	42.26	42.47	1-27.68			1-28	
6	265.39	21 43 04	19.07	27.13	35.15	1.01	1.74	2.72	0.00	0.66	47.73	47.98	1-32.73			1-33	
7	362.08	15 52 29	26.72	36.93	47.11	0.97	1.71	2.74	0.00	0.19	61.81	62.10	1-13.89	1-27		1-14.11	1-27
8	487.48	11 46 27	28.37	39.91	51.45	1.02	1.78	2.91	0.30	0.00	67.65	67.98	1-16.40	1-30		1-16.60	1-30
9	605.18	9 28 42	28.75	40.98	53.19	1.02	1.76	2.75	0.00	0.57	71.91	72.28	1-16.41	1-33		1-16.59	1-33
9½	695.45	8 14 45	30.31	43.35	56.37	1.06	1.82	2.83	0.76	0.00	75.32	75.71	1-25.82	1-27		1-26	1-27
10	790.25	7 15 18	30.28	44.05	57.81	1.06	1.84	2.85	0.00	0.00	77.51	77.93	1-27	1-28		1-27.17	1-28
11	922.65	6 12 47	40.74	56.47	72.19	1.08	1.84	2.87	2.99	0.00	93.85	94.31	1-32.85	1-33		2-33	
12	1098.73	5 12 59	43.99	60.65	77.28	1.15	1.90	2.91	5.33	0.00	100.30	100.80	1-23.88	2-24		3-24	
15	1851.09	3 05 44	42.34	62.67	83.00	1.09	1.89	2.91	0.00	0.62	111.57	112.19	1-29.90	2-26		2-26	1-30
16	1993.24	2 52 59	58.16	81.76	105.35	1.04	1.82	2.87	1.56	0.00	136.90	137.57	1-29.90	2-33		1-30	2-33
18	2546.31	2 14 31	58.73	84.46	110.10	1.04	1.82	2.86	0.00	1.08	145.76	146.51	1-25.93	3-26		4-26	
20	3257.26	1 45 32	61.84	90.21	118.59	1.08	1.88	2.93	0.44	0.00	156.59	157.42	1-26.92	2-27	1-33	3-27	1-33
24	4886.16	1 10 21	67.82	100.21	132.59	1.27	1.97	3.00	2.43	0.00	176.22	177.22	1-32.89	3-33		4-33	

In all cases gage is considered 4′ 8½″.

TABLE 17

TABLE OF SWITCH LEADS FOR RIGID FROGS

Thickness of Switch Rail of Point and Bluntness of Point of Frog not Considered

Frog Number *N*	Frog Angle *F*	Distance Point to Toe *W*	Distance Point to Heel *K*	Length of Switch Rail *S*	Heel Distance *H*	Switch Angle *α*	Gage *G*	Theoretical Leads		Practical Leads		
								L Length	*D* Degree of Curve	Length	Degree of Curve	Rails Required
4	14° 15′	3′ 0″	3′ 0″	10′ 0″	5″	2° 23′ 17″	4′ 8½″	37.20	50° 51′	37.00	50° 57′	2–24
5	11° 25′	3′ 0″	3′ 0″	10′ 0″	5″	2° 23′ 17″	4′ 8½″	43.48	30° 01′	43.00	31° 16′	2–30
6	9° 32′	4′ 4″	7′ 10″	10′ 0″ 12′ 0″	5″ 5″	2° 23′ 17″ 1° 59′ 24″	4′ 8½″ 4′ 8½″	48.49 51.68	21° 03′ 21° 29′	48.33	21° 19′	2–24 2–10
7	8° 10′	4′ 4″	7′ 10″	10′ 0″ 12′ 0″ 15′ 0″	5″ 5″ 5″	2° 23′ 17″ 1° 59′ 24″ 1° 35′ 31″	4′ 8½″ 4′ 8½″ 4′ 8½″	54.08 57.58 62.34	14° 35′ 15° 00′ 15° 21′	58.33	15° 10′	2–30 2–12
8	7° 09′	4′ 4″	7′ 10″	12′ 0″ 15′ 0″	5″ 5″	1° 59′ 24″ 1° 35′ 31″	4′ 8½″ 4′ 8½″	63.25 68.38	11° 01′ 11° 21′	70.33	11° 38′	2–27 2–24
9	6° 22′	4′ 4″	7′ 10″	15′ 0″	5″	1° 35′ 31″	4′ 8½″	74.08	8° 43′	76.33	8° 57′	2–30 2–27
9½	6° 02′	4′ 4″	7′ 10″	15′ 0″ 16′ 6″	5″ 5″	1° 35′ 31″ 1° 26′ 52″	4′ 8½″ 4′ 8½″	76.86 79.48	7° 44′ 7° 50′	80.83	7° 51′	2–33 2–27
10	5° 44′	4′ 4″	7′ 10″	15′ 0″ 16′ 6″	5″ 5″	1° 35′ 31″ 1° 26′ 52″	4′ 8½″ 4′ 8½″	79.58 82.30	6° 53′ 6° 59′	83.83	7° 07′	2–33 2–30
12	4° 46′	6′ 0″	11′ 0″	16′ 6″ 18′ 0″	5″ 5″	1° 26′ 52″ 1° 19′ 35″	4′ 8½″ 4′ 8½″	92.34 95.24	4° 45′ 4° 50′	96.00	4° 50′	6–24
15	3° 49′	7′ 6″	12′ 6″	18′ 0″ 20′ 0″	5″ 5″	1° 19′ 35″ 1° 11′ 39″	4′ 8½″ 4′ 8½″	109.91 114.14	2° 57′ 3° 02′	114.50	3° 02′	2–33 4–27

TABLE 18

TABLE OF SWITCH LEADS FOR SPRING FROGS

Thickness of Switch Rail at Point and Bluntness of Point of Frog not Considered

Frog Number N	Frog Angle F	Distance Point to Toe W	Distance Point to Heel K	Length of Switch Rail S	Heel Distance H	Switch Angle α	Gage G	Theoretical Leads: Length in Feet L	Theoretical Leads: Degree of Curve D	Practical Leads: Length in Feet	Practical Leads: Degree of Curve	Practical Leads: Rails Required	Frog Number N
6	9° 32′	7′ 0″	8′ 0″	10′ 0″ 12′ 0″	5″ 5″	2° 23′ 17″ 1° 59′ 24″	4′ 8½″ 4′ 8½″	46.89 49.94	24° 05′ 24° 35′	47.00	24° 09′	2-30	6
7	8° 10′	7′ 0″	8′ 0″	10′ 0″ 12′ 0″ 15′ 0″	5″ 5″ 5″	2° 23′ 17″ 1° 59′ 24″ 1° 35′ 31″	4′ 8½″ 4′ 8½″ 4′ 8½″	52.61 56.02 60.55	16° 17′ 16° 45′ 17° 08′	56.00	16° 45′	2-27 2-10	7
8	7° 09′	7′ 0″	8′ 0″	12′ 0″ 15′ 0″	5″ 5″	1° 59′ 24″ 1° 35′ 31″	4′ 8½″ 4′ 8½″	61.73 66.68	12° 06′ 12° 32′	67.00	12° 36′	2-30 2-15	8
9	6° 22′	7′ 0″	8′ 0″	15′ 0″	5″	1° 35′ 31″	4′ 8½″	72.48	9° 28′	73.00	9° 32′	2-27 2-26	9
9½	6° 02′	7′ 0″	8′ 0″	15′ 0″ 16′ 6″	5″ 5″	1° 35′ 31″ 1° 26′ 52″	4′ 8½″ 4′ 8½″	75.31 77.84	8° 20′ 8° 27′	77.50	8° 35′	2-30 2-24	9½
10	5° 44′	7′ 0″	8′ 0″	15′ 0″ 16′ 6″	5″ 5″	1° 35′ 31″ 1° 26′ 52″	4′ 8½″ 4′ 8½″	78.07 80.70	7° 23′ 7° 30′	80.50	7° 30′	2-33 2-27	10
12	4° 46′	7′ 0″	8′ 0″	16′ 6″ 18′ 0″	5″ 5″	1° 26′ 52″ 1° 19′ 35″	4′ 8½″ 4′ 8½″	91.81 94.67	4° 52′ 4° 56′	97.00	5° 05′	2-30 2-27 2-15	12
15	3° 49′	7′ 0″	8′ 0″	18′ 0″ 20′ 0″	5″ 5″	1° 19′ 35″ 1° 11′ 39″	4′ 8½″ 4′ 8½″	109.91 114.14	2° 57′ 3° 02′	114.50	3° 02′	2-33 4-27	15

TABLE 19

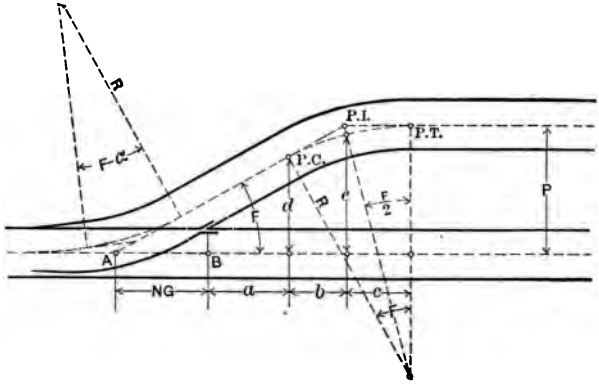

Fig. 39.

COORDINATES FOR LOCATING PARALLEL SIDINGS WITH TAPE

No. 4 Turnout: $\Delta = 14° 15'$ $D = 50°$ $T = 14.79$ $R = 118.31$

P	a	b	c	$a+b+c$	d	e
12.0	14.08	14.45	14.67	43.20	8.36	11.09
12.5	16.05	14.45	14.67	45.17	8.86	11.59
13.0	18.02	14.45	14.67	47.14	9.36	12.09
13.5	19.99	14.45	14.67	49.11	9.86	12.59
14.0	21.96	14.45	14.67	51.08	10.36	13.09
14.5	23.93	14.45	14.67	53.05	10.86	13.59
15.0	25.90	14.45	14.67	55.02	11.36	14.09
15.5	27.98	14.45	14.67	56.99	11.86	14.59
16.0	29.83	14.45	14.67	58.96	12.36	15.09
16.5	31.80	14.45	14.67	60.92	12.86	15.59
17.0	33.37	14.45	14.67	62.89	13.36	16.09
17.5	35.74	14.45	14.67	64.86	13.86	16.59
18.0	37.71	14.45	14.67	66.83	14.36	17.09
18.5	39.68	14.45	14.67	68.80	14.86	17.59
19.0	41.65	14.45	14.67	70.77	15.36	18.09
19.5	43.62	14.45	14.67	72.74	15.86	18.59
20.0	45.58	14.45	14.67	74.70	16.36	19.09

For 0.10 ft. change in P, a and $(a+b+c)$ change 0.3938 ft.
d and e change as P. b and c remain constant for all values of P.

TABLE 19 — *Continued*

No. 5 Turnout: $\Delta = 11° 25'$ $D = 30°$ $T = 19° 10'$ $R = 191.11$

P	a	b	c	$a+b+c$	d	e
12.0	17.16	18.82	19.01	54.99	8.22	11.05
12.5	19.63	18.82	19.01	57.46	8.72	11.55
13.0	22.11	18.82	19.01	59.94	9.22	12.05
13.5	24.58	18.82	19.01	62.41	9.72	12.55
14.0	27.06	18.82	19.01	64.89	10.22	13.05
14.5	29.54	18.82	19.01	67.37	10.72	13.55
15.0	32.01	18.82	19.01	69.84	11.22	14.05
15.5	34.49	18.82	19.01	72.32	11.72	14.55
16.0	36.96	18.82	19.01	74.79	12.22	15.05
16.5	39.44	18.82	19.01	77.27	12.72	15.55
17.0	41.92	18.82	19.01	79.75	13.22	16.05
17.5	44.39	18.82	19.01	82.22	13.72	16.55
18.0	46.87	18.82	19.01	84.70	14.22	17.05
18.5	49.34	18.82	19.01	87.71	14.72	17.55
19.0	51.82	18.82	19.01	89.65	15.22	18.05
19.5	54.30	18.82	19.01	92.13	15.72	18.55
20.0	56.77	18.82	19.01	94.60	16.22	19.05

For 0.10 ft. change in P, a and $(a+b+c)$ change 0.4952 ft.
d and e change as P. b and c remain constant for all values of P.

No. 6 Turnout: $\Delta = 9° 32'$ $D = 21°$ $T = 22.88$ $R = 274.37$

P	a	b	c	$a+b+c$	d	e
12.0	20.64	22.64	22.80	66.08	8.21	11.05
12.5	23.12	22.64	22.80	68.56	8.71	11.55
13.0	25.59	22.64	22.80	71.03	9.21	12.05
13.5	28.07	22.64	22.80	73.51	9.71	12.55
14.0	30.55	22.64	22.80	75.99	10.21	13.05
14.5	33.03	22.64	22.80	78.47	10.71	13.55
15.0	35.50	22.64	22.80	80.94	11.21	14.05
15.5	37.98	22.64	22.80	83.42	11.71	14.55
16.0	40.46	22.64	22.80	85.90	12.21	15.05
16.5	42.94	22.64	22.80	88.38	12.71	15.55
17.0	45.41	22.64	22.80	90.85	13.21	16.05
17.5	47.89	22.64	22.80	93.33	13.71	16.55
18.0	50.37	22.64	22.80	95.81	14.21	17.05
18.5	52.84	22.64	22.80	98.28	14.71	17.55
19.0	55.32	22.64	22.80	100.76	15.21	18.05
19.5	57.80	22.64	22.80	103.24	15.71	18.55
20.0	60.28	22.64	22.80	105.72	16.21	19.05

For 0.10 ft. change in P, a and b change 0.5954 ft.
d and e change as P. b and c remain constant for all values of P.

TABLE 19 — *Continued*

No. 7 Turnout: $\Delta = 8° 10'$ $D = 15°$ $T = 27.35$ $R = 383.06$

P	a	b	c	$a+b+c$	d	e
12.0	23.59	27.14	27.28	78.01	8.12	11.03
12.5	27.07	27.14	27.28	81.49	8.62	11.53
13.0	30.56	27.14	27.28	84.98	9.12	12.03
13.5	34.04	27.14	27.28	88.46	9.62	12.53
14.0	37.52	27.14	27.28	91.94	10.12	13.03
14.5	41.01	27.14	27.28	95.43	10.62	13.53
15.0	44.49	27.14	27.28	98.91	11.12	14.03
15.5	47.98	27.14	27.28	102.40	11.62	14.53
16.0	51.46	27.14	27.28	105.88	12.12	15.03
16.5	54.95	27.14	27.28	109.37	12.62	15.53
17.0	58.43	27.14	27.28	112.85	13.12	16.03
17.5	61.91	27.14	27.28	116.33	13.62	16.53
18.0	65.40	27.14	27.28	119.82	14.12	17.03
18.5	68.88	27.14	27.28	123.30	14.62	17.53
19.0	72.37	27.14	27.28	126.79	15.12	18.03
19.5	75.85	27.14	27.28	130.27	15.62	18.53
20.0	79.33	27.14	27.28	133.75	16.12	19.03

For 0.10 ft. change in P, a and $(a+b+c)$ change 0.6968 ft.
d and e change as P. b and c remain constant for all values of P.

No. 8 Turnout: $\Delta = 7° 09'$ $D = 11°$ $T = 32.59$ $R = 521.67$

P	a	b	c	$a+b+c$	d	e
12.0	25.65	32.40	32.53	90.58	7.94	10.98
12.5	29.64	32.40	32.53	94.57	8.44	11.48
13.0	33.63	32.40	32.53	98.56	8.94	11.98
13.5	37.61	32.40	32.53	102.54	9.44	12.48
14.0	41.60	32.40	32.53	106.53	9.94	12.98
14.5	45.58	32.40	32.53	110.51	10.44	13.48
15.0	49.57	32.40	32.53	114.50	10.94	13.98
15.5	53.56	32.40	32.53	118.49	11.44	14.48
16.0	57.54	32.40	32.53	122.47	11.94	14.98
16.5	61.63	32.40	32.53	126.46	12.44	15.48
17.0	65.51	32.40	32.53	130.44	12.94	15.98
17.5	69.50	32.40	32.53	134.43	13.44	16.48
18.0	73.49	32.40	32.53	138.42	13.94	16.98
18.5	77.47	32.40	32.53	142.40	14.44	17.48
19.0	81.46	32 40	32.53	146.39	14.94	17.98
19.5	85.44	32.40	32.53	150.37	15.44	18.48
20.0	89.43	32.40	32.53	154.36	15.94	18.98

For 0.10 ft. change in P, a and b change 0.7972 ft.
d and e change as P. b and c remain constant for all values of P.

TABLE 19 — *Continued*

No. 9 Turnout: $\Delta = 6° 22'$ $D = 9°$ $T = 35.45$ $R = 637.28$

P	a	b	c	$a+b+c$	d	e
12.0	29.95	35.28	35.39	100.62	8.07	11.02
12.5	34.43	35.28	35.39	105.10	8.57	11.52
13.0	38.91	35.28	35.39	109.58	9.07	12.02
13.5	43.39	35.28	35.39	114.06	9.57	12.52
14.0	47.87	35.28	35.39	115.54	10.07	13.02
14.5	52.35	35.28	35.39	123.02	10.57	13.52
15.0	56.83	35.28	35.39	127.50	11.07	14.02
15.5	61.31	35.28	35.39	131.98	11.57	14.52
16.0	65.79	35.28	35.39	136.46	12.07	15.02
16.5	70.28	35.39	35.39	140.95	12.57	15.52
17.0	74.76	35.28	35.39	145.43	13.07	16.02
17.5	79.24	35.28	35.39	149.91	13.57	16.52
18.0	83.82	35.28	35.39	154.39	14.07	17.02
18.5	88.20	35.28	35.39	158.87	14.57	17.52
19.0	92.68	35.28	35.39	163.35	15.07	18.02
19.5	97.16	35.28	35.39	167.83	15.57	18.52
20.0	101.64	35.28	35.39	172.31	16.07	19.02

For 0.10 ft. change in P, a and $(a+b+c)$ change 0.8962 ft.
d and e change as P. b and c remain constant for all values of P.

No. 9½ Turnout: $\Delta = 6° 02'$ $D = 8°$ $T = 37.77$ $R = 716.78$

P	a	b	c	$a+b+c$	d	e
12.0	31.24	37.62	37.72	106.58	8.03	11.00
12.5	35.97	37.62	37.72	111.31	8.53	11.50
13.0	40.70	37.62	37.72	116.04	9.03	12.00
13.5	45.43	37.62	37.72	120.77	9.53	12.50
14.0	50.17	37.62	37.72	125.51	10.03	13.00
14.5	54.90	37.62	37.72	130.24	10.53	13.50
15.0	59.63	37.62	37.72	134.97	11.03	14.00
15.5	64.36	37.62	37.72	139.70	11.53	14.50
16.0	69.09	37.62	37.72	144.43	12.03	15.00
16.5	73.82	37.62	37.72	149.16	12.53	15.50
17.0	78.55	37.62	37.72	153.89	13.03	16.00
17.5	83.28	37.62	37.72	158.62	13.53	16.50
18.0	88.01	37.62	37.72	163.35	14.03	17.00
18.5	92.74	37.62	37.72	168.08	14.53	17.50
19.0	97.47	37.62	37.72	172.81	15.03	18.00
19.5	102.20	37.62	37.72	177.54	15.53	18.50
20.0	106.93	37.62	37.72	182.27	16.03	19.00

For 0.10 ft. change in P, a and $(a+b+c)$ change 0.9461 ft.
d and e change as P. b and c remain constant for all values of P.

TABLE 19 — *Continued*

No. 10 Turnout: $\Delta = 5° 44'$ $D = 7°$ $T = 41.01'$ $R = 819.02$

P	a	b	c	$a+b+c$	d	e
12.0	31.63	40.85	40.96	113.44	7.90	10.98
12.5	36.61	40.85	40.96	118.42	8.40	11.48
13.0	41.59	40.85	40.96	123.40	8.90	11.98
13.5	46.57	40.85	40.96	128.38	9.40	12.48
14.0	51.55	40.85	40.96	133.36	9.90	12.98
14.5	56.53	40.85	40.96	138.34	10.40	13.48
15.0	61.51	40.85	40.96	143.32	10.90	13.98
15.5	66.49	40.85	40.96	148.30	11.40	14.48
16.0	71.47	40.85	40.96	153.28	11.90	14.98
16.5	76.45	40.85	40.96	158.26	12.40	15.48
17.0	81.43	40.85	40.96	163.24	12.90	15.98
17.5	86.41	40.85	40.96	168.22	13.40	16.48
18.0	91.39	40.85	40.96	173.20	13.90	16.98
18.5	96.37	40.85	40.96	178.18	14.40	17.48
19.0	101.35	40.85	40.96	183.16	14.90	17.98
19.5	106.33	40.85	40.96	188.15	15.40	18.48
20.0	111.31	40.85	40.96	193.13	15.90	18.98

For 0.10 ft. change in P, a and $(a+b+c)$ change 0.9960 ft.
d and e change as P. b and c remain constant for all values of P.

No. 12 Turnout: $\Delta = 4° 46'$ $D = 5°$ $T = 47.71$ $R = 1146.28$

P	a	b	c	$a+b+c$	d	e
12.0	39.86	47.58	47.67	135.11	8.03	11.00
12.5	45.86	47.58	47.67	141.11	8.53	11.50
13.0	51.86	47.58	47.67	147.11	9.03	12.00
13.5	57.85	47.58	47.67	153.10	9.53	12.50
14.0	63.85	47.58	47.67	159.10	10.03	13.00
14.5	69.85	47.58	47.67	165.10	10.53	13.50
15.0	75.84	47.58	47.67	171.09	11.03	14.00
15.5	81.84	47.58	47.67	177.09	11.53	14.50
16.0	87.83	47.58	47.67	183.08	12.03	15.00
16.5	93.83	47.58	47.67	189.08	12.53	15.50
17.0	99.83	47.58	47.67	195.08	13.03	16.00
17.5	105.82	47.58	47.67	201.07	13.53	16.50
18.0	111.82	47.58	47.67	207.07	14.03	17.00
18.5	117.81	47.58	47.67	213.06	14.53	17.50
19.0	123.81	47.58	47.67	219.06	15.03	18.00
19.5	129.81	47.58	47.67	225.06	15.53	18.50
20.0	135.80	47.58	47.67	231.05	16.03	19.00

For 0.10 change in P, a and $(a+b+c)$ change 1.1992 ft.
d and e change as P. b and c remain constant for all values of P.

TABLE 19 — *Continued*

No. 15 Turnout: $\Delta = 3° 46'$ $D = 3°$ $T = 62.80$ $R = 1910.08$

P	a	b	c	$a+b+c$	d	e
12.0	48.98	62.70	62.77	174.45	7.87	10.97
12.5	56.57	62.70	62.77	182.04	8.37	11.47
13.0	64.17	62.70	62.77	189.64	8.87	11.97
13.5	71.76	62.70	62.77	197.23	9.37	12.47
14.0	79.36	62.70	62.77	204.83	9.87	12.97
14.5	86.95	62.70	62.77	212.42	10.37	13.47
15.0	94.55	62.70	62.77	202.02	10.87	13.97
15.5	102.14	62.70	62.77	227.61	11.37	14.47
16.0	109.74	62.70	62.77	235.21	11.87	14.97
16.5	117.33	62.70	62.77	242.80	12.37	15.47
17.0	124.93	62.70	62.77	250.40	12.87	15.97
17.5	132.52	62.70	62.77	257.99	13.37	16.47
18.0	140.12	62.70	62.77	265.59	13.87	16.97
18.5	147.71	62.70	62.77	273.18	14.37	17.47
19.0	155.31	62.70	62.77	280.78	14.87	17.97
19.5	162.90	62.70	62.77	288.37	15.37	18.47
20.0	170.49	62.70	62.77	295.96	15.87	18.97

For 0.10 ft. change in P, a and $(a+b+c)$ change 1.5189 ft.
d and e change as P. b and c remain constant for all values of P.

TABLE 20

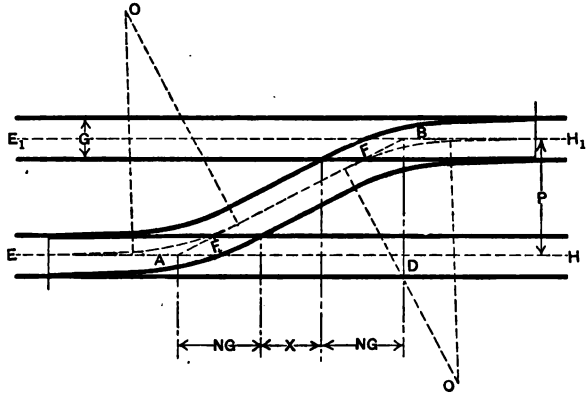

Fig. 15.

Frog distances = x for Crossovers between parallel tracks. Frogs of same number, straight track between frogs

N	4	5	6	7	8	9	9½	10	12	15
F	14°15′	11°25′	9° 32′	8° 10′	7° 09′	6° 22′	6° 02′	5° 44′	4° 46′	3° 49′
P	x									
12.0	9.58	12.34	14.95	17.70	20.33	22.80				
12.5	11.55	14.82	17.93	21.19	24.31	27.28	28.81	30.33		
13.0	13.52	17.29	20.91	24.67	28.30	31.76	33.54	35.31	42.90	53.62
13.5	15.49	19.77	23.89	28.15	32.29	36.24	38.27	40.29	48.90	61.11
14.0	17.46	22.25	26.86	31.64	36.27	40.72	43.00	45.28	54.89	68.61
14.5	19.43	24.72	29.84	35.12	40.26	45.20	47.73	50.26	60.89	76.10
15.0	21.40	27.20	32.82	38.61	44.24	49.68	52.46	55.24	66.89	83.60
15.5	23.37	29.67	35.79	42.09	48.23	54.17	57.19	60.22	72.88	91.09
16.0	25.33	32.15	38.77	45.58	52.22	58.65	61.92	65.20	78.88	98.59
16.5	27.30	34.63	41.75	49.06	56.20	63.13	66.05	70.18	84.87	106.08
17.0	29.27	37.10	44.73	52.54	60.19	67.61	71.39	75.16	90.87	113.58
17.5	31.24	39.58	47.70	56.03	64.17	72.09	76.12	80.14	96.87	121.07
18.0	33.21	42.05	50.68	59.51	68.16	76.57	80.85	85.12	102.86	128.57
18.5	35.18	44.53	53.66	63.00	72.14	81.05	85.58	90.10	108.86	136.06
19.0	37.15	47.01	56.64	66.48	76.13	85.53	90.31	95.08	114.85	143.56
19.5	39.12	49.48	59.61	69.96	80.12	90.01	95.04	100.06	120.85	151.05
20.0	41.08	51.96	62.59	73.45	84.10	94.50	99.77	105.04	126.85	158.55
Change in x for 0.10 ft. change in P										
	0.394	0.495	0.595	0.697	0.797	0.896	0.946	0.996	1.199	1.499

TABLE 21

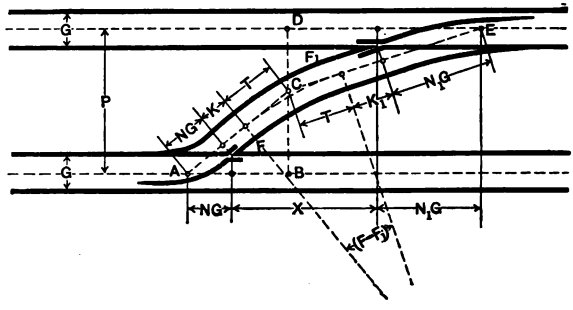

Fig. 16.

Frog distances $= x$ for Crossovers between parallel tracks. Frogs of different number. Simple curve tangent to heels of frogs. Minimum radius equal to or greater than the radius of the lead curve for frog N and equal to or less than the radius of the lead curve for frog N_1.

N–N_1	4–5	4–6	4–7	5–6	5–7	5–8	6–7	6–8	6–9	7–8
P	x									
12.0										
12.5	13.02									22.65
13.0	15.22			19.40	21.23		22.65			26.37
13.5		19.90		21.10	24.13	25.80	25.86	27.50		
14.0		22.28	24.08	24.81	27.03	28.85		30.91	32.45	
14.5		24.65	26.60		29.92	31.91		34.32	36.03	
15.0		27.03	29.13		32.82	34.97		37.73	39.61	
15.5		29.40	31.65		35.72	38.03			43.19	
16.0		31.78	34.17			41.09			46.77	
16.5			36.70			44.15			50.35	
17.0			39.22			47.21				
17.5			41.74			50.27				
18.0			44.27			53.33				
18.5			46.78							
19.0			49.03							
Change in x for 0.10 ft. change in P										
	0.439	0.475	0.505	0.541	0.579	0.612	0.642	0.682	0.716	0.744

For values of x for P greater than in Table No. 21, see Table No. 22.

TABLE 21 — *Continued*

$N-N_1$	7–9	7–9½	7–10	8–9	8–9½	8–10	9–9½	9–10	9–12	9½–12
P	x									
12.0				21.49			23.42	24.01		
12.5				25.71	26.38			28.73		
13.0	27.79				30.70	31.43			36.97	37.73
13.5	31.71	32.47	33.22			35.86			42.10	43.02
14.0	35.63	36.48	37.32						47.23	
14.5		40.56	41.42						52.36	
15.0		44.51	45.52							
15.5			49.62							
16.0										
16.5										
17.0										
17.5										
18.0										
18.5										
19.0										
	Change in x for 0.10 ft. change in P									
	0.784	0.803	0.820	0.844	0.865	0.886	0.921	0.944	1.026	1.058

For values of x for P greater than in Table No. 21, see Table No. 22.

$N-N_1$	9½–15	10–15	12–15							
P	x									
12.0										
12.5										
13.0			47.84							
13.5	48.16	49.54	54.50							
14.0	53.96	55.53								
14.5	59.77	61.51								
15.0	65.57	67.50								
15.5	71.37	73.48								
16.0	77.17	79.47								
16.5	82.98	85.45								
17.0	88.78									
17.5	94.58									
18.0										
18.5										
19.0										
	Change in x for 0.10 ft. change in P									
	1.161	1.197	1.333							

TABLE 22

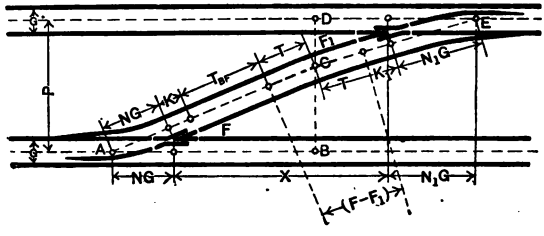

Fig. 17.

Frog distances $= x$ for Crossovers between parallel tracks. Frogs of different number. Simple curve tangent to heel of frog N_1 and to the line of frog N produced. Radius equal to radius lead curve for frog N_1. T_{BF} equals length of tangent between P. T. of connecting curve and heel of frog N.

For values of x for P less than given in Table No. 22, see Table No. 21.

$N-N_1$	4–5		4–6		4–7		5–6		5–7	
P	x	T_{BF}	x	T_{BF}	x	T_{BF}	x	T_{BF}	x	T_{BF}
12.0										
12.5										
13.0	15.10	1.02					19.35	0.52		
13.5	17.07	3.05					21.83	3.05		
14.0	19.04	5.08					24.30	5.57		
14.5	21.01	7.11					26.78	8.10		
15.0	22.98	9.14					29.26	10.62	32.62	1.18
15.5	24.95	11.17					31.73	13.15	35.10	3.70
16.0	26.91	13.20					34.21	15.68	37.58	6.23
16.5	28.88	15.24	33.77	1.91			36.68	18.20	40.05	8.76
17.0	30.85	17.27	35.74	3.94			39.16	20.73	42.53	11.28
17.5	32.82	19.30	37.71	5.97			41.64	23.25	45.00	13.81
18.0	34.79	21.33	39.68	8.00			44.11	25.78	47.48	16.34
18.5	36.76	23.36	41.65	10.03			46.59	28.31	49.96	18.86
19.0	38.73	25.39	43.61	12.06			49.06	30.83	52.43	21.39
19.5	40.70	27.42	45.58	14.09	51.39	1.65	51.54	33.36	54.91	23.91
20.0	42.66	29.45	47.55	16.12	53.36	3.68	54.02	35.88	57.38	26.44
	Change in x and T_{BF} for 0.10 ft. change in P									
	0.394	0.406	0.394	0.406	0.394	0.406	0.495	0.505	0.495	0.505

TABLE 22 — *Continued*

$N-N_1$	5–8		6–7		6–8		6–9		7–8	
P	x	T_{BF}	x	T_{BF}	x	T_{BF}	x	T_{BF}	x	T_{BF}
12.0										
12.5										
13.0									26.25	1.86
13.5			25.73	1.64					29.73	5.38
14.0			28.71	4.66					33.21	8.90
14.5			31.69	7.68					36.70	12.42
15.0			34.67	10.70	37.59	0.99			40.18	15.94
15.5			37.64	13.72	40.57	4.01			43.67	19.46
16.0			40.62	16.74	43.55	7.03			47.15	22.98
16.5			43.60	19.76	46.52	10.05	50.30	0.24	50.63	26.50
17.0			46.57	22.78	49.50	13.07	53.28	3.26	54.12	30.02
17.5	49.92	1.50	49.55	25.80	52.48	16.09	56.26	6.28	57.60	33.54
18.0	52.40	4.03	52.53	28.82	55.46	19.11	59.23	9.29	61.09	37.06
18.5	54.87	6.55	55.51	31.83	58.43	22.13	62.21	12.31	64.57	40.58
19.0	57.35	9.08	58.48	34.85	61.41	25.14	65.19	15.33	68.06	44.10
19.5	59.82	11.60	61.46	37.87	64.39	28.16	68.17	18.35	71.54	47.62
20.0	62.30	14.13	64.44	40.89	67.36	31.18	71.14	21.37	75.02	51.14
	Change in x and T_{BF} for 0.10 ft. change in P									
	0.495	0.505	0.595	0.604	0.595	0.604	0.595	0.604	0.697	0.704

$N-N_1$	7–9		7–9½		7–10		8–9		8–9½	
P	x	T_{BF}	x	T_{BF}	x	T_{BF}	x	T_{BF}	x	T_{BF}
12.0										
12.5							25.62	1.64		
13.0							29.60	5.66	30.59	1.37
13.5							33.59	9.68	34.57	5.38
14.0	35.58	0.45					37.57	13.70	38.56	9.40
14.5	39.06	3.97					41.56	17.71	42.54	13.42
15.0	42.54	7.49	44.15	2.40			45.55	21.73	46.53	17.44
15.5	46.03	11.01	47.64	5.92			49.53	25.75	50.52	21.45
16.0	49.51	14.53	51.12	9.44	53.11	3.31	53.52	29.76	54.50	25.47
16.5	53.00	18.05	54.60	12.96	56.60	6.83	57.50	33.78	58.49	29.49
17.0	56.48	21.57	58.09	16.48	60.08	10.35	61.49	37.80	62.47	33.50
17.5	59.96	25.09	61.57	20.00	63.57	13.87	65.48	41.81	66.46	37.52
18.0	63.45	28.61	65.06	23.52	67.05	17.39	69.46	45.83	70.45	41.54
18.5	66.93	32.13	68.54	27.04	70.53	20.91	73.45	49.85	74.43	45.56
19.0	70.42	35.65	72.02	30.56	74.02	24.43	77.43	53.87	78.42	49.57
19.5	73.90	39.16	75.51	34.08	77.50	27.95	81.42	57.88	82.40	53.59
20.0	77.38	42.68	78.99	37.60	80.99	31.47	85.41	61.90	86.39	57.61
	Change in x and T_{BF} for 0.10 ft. change in P									
	0.697	0.704	0.697	0.704	0.697	0.704	0.797	0.803	0.797	0.803

TABLE 22 — *Continued*

$N-N_1$	8–10		9–9½		9–10		9–12		9½–10	
P	x	T_{BF}	x	T_{BF}	x	T_{BF}	x	T_{BF}	x	T_{BF}
12.0			23.32	3.80					24.58	4.90
12.5			27.80	8.31	28.51	4.12			29.31	9.66
13.0			32.28	12.82	32.99	8.63			34.04	14.42
13.5	35.82	0.33	36.76	17.33	37.47	13.14			38.77	19.18
14.0	39.81	4.35	41.24	21.84	41.96	17.65			43.50	23.93
14.5	43.79	8.37	45.72	26.34	46.44	22.16	52.18	1.80	48.23	28.69
15.0	47.78	12.38	50.21	30.85	50.92	26.67	56.66	6.31	52.96	33.45
15.5	51.77	16.40	54.69	35.36	55.40	31.17	61.14	10.82	57.69	38.20
16.0	55.75	20.42	59.17	39.87	59.88	35.68	65.62	15.33	62.42	42.96
16.5	59.74	24.44	63.65	44.38	64.36	40.19	70.10	19.84	67.15	47.72
17.0	63.72	28.45	68.13	48.89	68.84	44.70	74.58	24.35	71.88	52.48
17.5	67.71	32.47	72.61	53.40	73.32	49.21	79.06	28.86	76.61	57.23
18.0	71.69	36.49	77.09	57.91	77.80	53.72	83.55	33.64	81.34	61.99
18.5	75.68	40.50	81.57	62.42	82.29	58.23	88.03	37.87	86.07	66.75
19.0	79.67	44.52	86.05	66.92	86.77	62.74	92.51	42.38	90.81	71.50
19.5	83.65	48.54	90.54	71.43	91.25	67.25	96.99	46.89	95.54	76.26
20.0	87.64	52.55	95.02	75.94	95.73	71.76	101.47	51.40	100.27	81.02
	Change in x and T_{BF} for 0.10 ft. change in P									
	0.797	0.803	0.896	0.902	0.896	0.902	0.896	0.902	0.946	0.951

$N-N_1$	9½–12		9½–15		10–12		10–15	
P	x	T_{BF}	x	T_{BF}	x	T_{BF}	x	T_{BF}
12.0								
12.5								
13.0					38.93	1.19		
13.5					43.91	6.19		
14.0	48.09	4.41			48.89	11.20		
14.5	52.82	9.17			53.87	16.20		
15.0	57.55	13.93			58.85	21.21		
15.5	62.28	18.68			63.83	26.21		
16.0	67.01	23.44			68.81	31.22		
16.5	71.75	28.20			73.79	36.22	85.16	1.46
17.0	76.48	32.96			78.77	41.23	90.14	6.46
17.5	81.21	37.71	94.41	0.77	83.75	46.23	95.12	11.47
18.0	85.94	42.47	99.14	5.53	88.73	51.24	100.10	16.47
18.5	90.67	47.23	103.87	10.28	93.71	56.24	105.08	21.48
19.0	95.40	51.98	108.60	15.04	98.69	61.25	110.06	26.48
19.5	100.13	56.74	113.33	19.80	103.67	66.25	115.04	31.49
20.0	104.86	61.50	118.06	24.55	108.65	71.26	120.02	36.49
	Change in x and T_{BF} for 0.10 ft. change in P							
	0.9461	0.951	0.9461	0.951	0.9960	1.001	0.9960	1.001

TABLE 22 — *Continued*

$N-N_1$	12–15							
P	x	T_{BN}						
12.0								
12.5								
13.0								
13.5								
14.0	60.51	5.87						
14.5	66.51	11.89						
15.0	72.51	17.90						
15.5	78.50	23.92						
16.0	84.50	29.94						
16.5	90.49	35.95						
17.0	96.49	41.97						
17.5	102.49	47.99						
18.0	108.48	54.00						
18.5	114.48	60.02						
19.0	120.47	66.04						
19.5	126.47	72.06						
20.0	132.47	78.07						
	Change in x and T_{BF} for 0.10 ft. change in P							
	1.1992	1.203						

TABLE 23

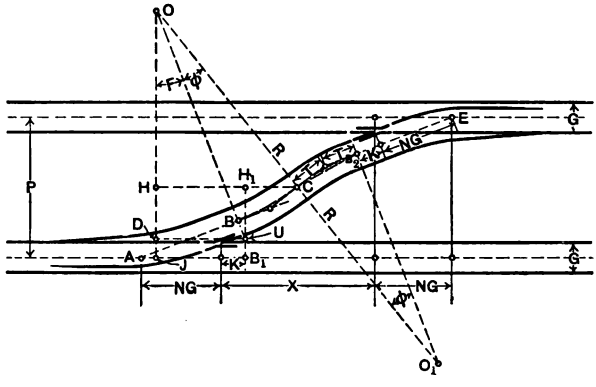

Fig. 18.

Frog distances $= x$ for Crossovers between parallel tracks. Frogs of same number. Reverse curve of equal radii tangent to heels of frogs.

No. 6 Frogs	$F = 9° 32'$	$D = 21°$	$R = 274.37$	
P	x	T	ϕ	$(F+\phi)$
16	36.21	5.40	2° 15′ 13″	11° 47′ 13″
17	40.90	6.60	2° 45′ 16″	12° 17′ 16″
18	45.40	7.75	3° 14′ 09″	12° 46′ 09″
19	49.73	8.86	3° 42′ 00″	13° 14′ 00″
20	53.91	9.94	4° 08′ 55″	13° 40′ 55″
25	72.95	14.87	6° 12′ 17″	15° 44′ 17″
30	89.67	19.25	8° 01′ 37″	17° 33′ 37″
40	118.47	26.93	11° 12′ 36″	20° 44′ 36″
50	143.06	33.64	13° 58′ 55″	23° 30′ 55″
60	164.74	39.72	16° 28′ 30″	26° 00′ 30″

For exact interpolation: $\cos(F+\phi_1) = 1.00804 - (P_1 \times 0.00182)$

$x_1 = 548.74 \sin(F+\phi_1) - 75.188 \qquad T_1 = 274.37 \tan \frac{\phi_1}{2}$.

TABLE 23 — *Continued*

No. 7 Frogs		$F=8° 10'$	$D=15°$	$R=383.065$
P	x	T	ϕ	$(F+\phi)$
16	42.14	6.83	2° 02′ 37″	10° 12′ 37″
17	47.39	8.17	2° 26′ 35″	10° 36′ 35″
18	52.81	9.55	2° 51′ 20″	11° 01′ 20″
19	57.86	10.83	3° 14′ 24″	11° 24′ 24″
20	62.73	12.08	3° 36′ 45″	11° 46′ 45″
25	85.04	17.80	5° 19′ 19″	13° 29′ 19″
30	104.73	22.90	6° 50′ 29″	15° 00′ 29″
40	138.84	31.83	9° 30′ 01″	17° 40′ 01″
50	168.64	39.77	11° 51′ 15″	20° 01′ 15″
60	194.19	46.70	13° 54′ 08″	22° 04′ 08″

For exact interpolation: $\cos(F+\phi_1)=1.00505-(P_1\times 0.0013052)$

$x_1=766.13\sin(F+\phi_1)-93.66 \qquad T_1=383.065\tan\frac{\phi_1}{2}$

No. 8 Frogs		$F=7° 09'$	$D=11°$	$R=521.671$
P	x	T	ϕ	$(F+\phi)$
16	48.01	8.26	1° 48′ 54″	8° 57′ 54″
17	54.24	9.84	2° 09′ 39″	9° 18′ 39″
18	60.22	11.36	2° 29′ 39″	9° 38′ 39″
19	66.00	12.83	2° 49′ 00″	9° 58′ 00″
20	71.60	14.25	3° 07′ 44″	10° 16′ 44″
25	97.33	20.81	4° 34′ 06″	11° 43′ 06″
30	120.15	26.66	5° 51′ 04″	13° 00′ 04″
40	159.88	36.94	8° 06′ 05″	15° 15′ 05″
50	194.22	45.94	10° 03′ 57″	17° 12′ 57″
60	224.82	54.06	11° 50′ 01″	18° 59′ 01″

For exact interpolation: $\cos(F+\phi_1)=1.00312-(P_1\times 0.0009585)$

$x_1=1043.34\sin(F+\phi_1)-114.58 \qquad T_1=521.67\tan\frac{\phi_1}{2}$

No. 9 Frogs		$F=6° 22'$	$D=9°$	$R=637.275$
P	x	T	ϕ	$(F+\phi)$
16	53.44	9.59	1° 43′ 29″	8° 05′ 29″
17	60.33	11.33	2° 02′ 17″	8° 24′ 17″
18	66.98	13.02	2° 20′ 25″	8° 42′ 25″
19	73.40	14.64	2° 37′ 57″	8° 59′ 57″
20	79.62	16.22	2° 54′ 55″	9° 16′ 55″
25	108.17	23.47	4° 13′ 06″	10° 35′ 06″
30	133.51	29.94	5° 22′ 45″	11° 44′ 45″
40	177.66	41.29	7° 24′ 51″	13° 46′ 51″
50	215.85	51.21	9° 11′ 22″	15° 33′ 22″
60	249.92	60.16	10° 47′ 09″	17° 09′ 09″

For exact interpolation: $\cos(F+\phi_1)=1.00259-(P_1\times 0.00078459)$

$x_1=1274.55\sin(F+\phi_1)-125.96 \qquad T_1=637.28\tan\frac{\phi_1}{2}$

TABLE 23 — *Continued*

No. 9½ Frogs	$F=6° 02'$	$D=8°$	$R=716.779$	
P	x	T	ϕ	$(F+\phi)$
16	56.29	10.29	1° 38′ 45″	7° 40′ 45″
17	63.58	12.13	1° 56′ 22″	7° 58′ 22″
18	70.57	13.90	2° 13′ 21″	8° 15′ 21″
19	77.50	15.62	2° 29′ 47″	8° 31′ 47″
20	83.93	17.28	2° 45′ 42″	8° 47′ 42″
25	114.11	24.93	3° 59′ 04″	10° 01′ 04″
30	140.92	31.76	5° 04′ 29″	11° 06′ 29″
40	186.89	43.55	6° 59′ 13″	13° 01′ 13″
50	227.45	54.04	8° 39′ 22″	14° 41′ 22″
60	264.46	63.70	10° 09′ 26″	16° 11′ 26″

For exact interpolation: $\cos(F+\phi_1)=1.00219-(P_1\times 0.00069756)$

$x_1=1433.56\sin(F+\phi_1)-135.27$ $\quad T_1=716.78\tan\frac{\phi_1}{2}$

No. 10 Frogs	$F=5° 44'$	$D=7°$	$R=819.02$	
P	x	T	ϕ	$(F+\phi)$
16	59.24	11.02	1° 32′ 30″	7° 16′ 30″
17	66.91	12.95	1° 48′ 45″	7° 32′ 45″
18	74.39	14.84	2° 04′ 34″	7° 48′ 34″
19	81.59	16.70	2° 19′ 50″	8° 03′ 50″
20	88.49	18.40	2° 34′ 29″	8° 18′ 29″
25	120.52	26.51	3° 42′ 31″	9° 26′ 31″
30	148.99	33.75	4° 43′ 11″	10° 27′ 11″
40	198.84	46.49	6° 29′ 53″	12° 13′ 53″
50	242.12	57.64	8° 03′ 07″	13° 47′ 07″
60	280.84	67.70	9° 27′ 02″	15° 11′ 02″

For exact interpolation: $\cos(F+\phi_1)=1.001716-(P_1\times 0.000610485)$

$x_1=1638.04\sin(F+\phi_1)-148.19$ $\quad T_1=819.02\tan\frac{\phi_1}{2}$

TABLE 24

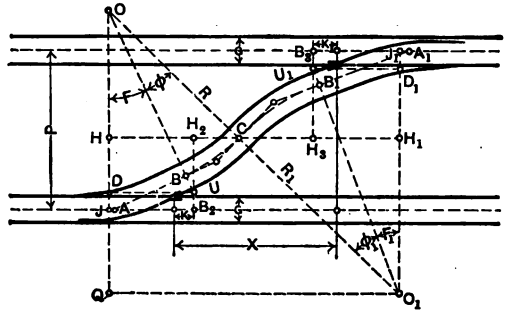

Fig. 19.

Frog distances $= x$ for Crossovers between parallel tracks. Frogs of different number. Reverse curve of different radii tangent to the heels of the frogs.

$N = 6$	$F = 9° 32'$	$D = 21°$	$R = 274.370$
$N_1 = 7$	$F_1 = 8° 10'$	$D_1 = 15°$	$R_1 = 383.065$

P	x	T_1	ϕ_1	T	ϕ	$(F_1 + \phi_1) = (F + \phi)$
16	39.50	9.13	2° 43′ 45″	3.26	1° 21′ 45″	10° 53′ 45″
17	44.58	10.63	3° 10′ 51″	4.34	1° 48′ 51″	11° 20′ 51″
18	49.52	12.12	3° 36′ 56″	5.39	2° 14′ 56″	11° 46′ 56″
19	53.98	13.49	4° 02′ 06″	6.39	2° 40′ 06″	12° 12′ 06″
20	58.72	14.85	4° 26′ 27″	7.36	3° 04′ 27″	12° 36′ 27″
25	79.49	21.09	6° 18′ 08″	11.82	4° 56′ 08″	14° 28′ 08″
30	97.77	26.63	7° 57′ 15″	15.79	6° 35′ 15″	16° 07′ 15″
40	129.36	36.35	10° 50′ 33″	22.74	9° 28′ 33″	19° 00′ 33″
50	156.44	44.86	13° 21′ 30″	28.82	11° 59′ 30″	21° 31′ 30″
60	180.40	52.55	15° 37′ 16″	34.31	14° 15′ 16″	23° 47′ 16″

For exact interpolation: $\cos(F_1 + \phi_1') = 1.0063070 - (P' \times 0.00152106)$

$x' = 657.435 \sin(F + \phi_1') - 84.78 \quad T_1' = R_1 \tan \frac{\phi_1'}{2} \quad T' = R \tan \frac{\phi'}{2}$

TABLE 24 — *Continued*

$N = 6$	$F = 9° 32'$	$D = 21°$	$R = 274.370$
$N_1 = 8$	$F_1 = 7° 09'$	$D_1 = 11°$	$R_1 = 521.671$

P	x	T_1	ϕ_1	T	ϕ	$(F_1 + \phi_1) = (F + \phi)$
16	43.37	13.10	2° 52′ 36″	1.18	0° 29′ 36″	10° 01′ 36″
17	48.93	14.94	3° 16′ 55″	2.15	0° 53′ 55″	10° 25′ 55″
18	54.24	16.72	3° 40′ 20″	3.09	1° 17′ 20″	10° 49′ 20″
19	59.37	18.44	4° 02′ 57″	3.99	1° 39′ 57″	11° 11′ 57″
20	64.06	20.10	4° 24′ 49″	4.86	2° 01′ 49″	11° 33′ 49″
25	87.72	27.75	6° 05′ 22″	8.88	3° 42′ 22″	13° 14′ 22″
30	107.16	34.55	7° 34′ 44″	12.45	5° 11′ 44″	14° 43′ 44″
40	141.96	46.49	10° 11′ 07″	18.71	7° 48′ 07″	17° 20′ 07″
50	171.90	56.94	12° 27′ 26″	24.18	10° 04′ 26″	19° 36′ 26″
60	198.44	66.36	14° 29′ 55″	29.11	12° 06′ 55″	21° 38′ 55″

For exact interpolation: $\cos (F_1 + \phi_1') = 1.00483 - (P' \times 0.00125622)$

$x' = 796.04 \sin (F_1 + \phi_1') - 95.23 \quad T_1' = R_1 \tan \frac{\phi_1'}{2} \quad T' = R \tan \frac{\phi'}{2}$

$N = 6$	$F = 9° 32'$	$D = 21°$	$R = 274.37$
$N_1 = 9$	$F_1 = 6° 22'$	$D_1 = 9°$	$R_1 = 637.27$

P	x	T_1	ϕ_1	T	ϕ	$(F_1 + \phi_1) = (F + \phi)$
16						
17	53.24	18.74	3° 22′ 09″	0.48	0° 12′ 09″	9° 44′ 09″
18	58.95	20.77	3° 44′ 02″	1.36	0° 34′ 02″	10° 06′ 02″
19	64.47	22.73	4° 05′ 11″	2.20	0° 55′ 11″	10° 27′ 11″
20	69.81	24.63	4° 25′ 38″	3.02	1° 15′ 38″	10° 47′ 38″
25	94.21	33.36	5° 59′ 35″	6.77	2° 49′ 35″	12° 21′ 35″
30	115.77	41.12	7° 23′ 03″	10.10	4° 13′ 03″	13° 45′ 03″
40	153.18	54.73	9° 49′ 04″	15.94	6° 39′ 04″	16° 11′ 04″
50	185.39	66.63	11° 56′ 17″	21.04	8° 46′ 17″	18° 18′ 17″
60	214.00	77.36	13° 50′ 37″	25.64	10° 40′ 37″	20° 12′ 37″

For exact interpolation: $\cos (F_1 + \phi_1') = 1.00426 - (P' \times 0.00109692)$

$x' = 911.64 \sin (F_1 + \phi_1') - 100.93 \quad T_1' = R_1 \tan \frac{\phi_1'}{2} \quad T' = R \tan \frac{\phi'}{2}$

TABLE 24 — *Continued*

$N=6$	$F=9° 32'$	$D=21°$	$R=274.37$
$N_1=9\frac{1}{2}$	$F_1=6° 02'$	$D_1=8°$	$R_1=716.78$

P	x	T_1	ϕ_1	T	ϕ	$(F_1+\phi_1)=(F+\phi)$
16						
17						
18	61.68	23.04	3° 40′ 54″	0.44	0° 10′ 54″	9° 42′ 54″
19	67.39	25.13	4° 01′ 06″	1.24	0° 31′ 06″	10° 03′ 06″
20	72.96	27.18	4° 20′ 39″	2.02	0° 50′ 39″	10° 22′ 39″
25	98.39	36.58	5° 50′ 32″	5.61	2° 20′ 32″	11° 52′ 32″
30	120.89	44.93	7° 10′ 24″	8.81	3° 40′ 24″	13° 12′ 24″
40	159.85	59.57	9° 30′ 09″	14.36	6° 00′ 09″	15° 32′ 09″
50	193.45	72.38	11° 31′ 55″	19.21	8° 01′ 55″	17° 33′ 55″
60	223.47	83.92	13° 21′ 22″	23.66	9° 51′ 22″	19° 23′ 22″

For exact interpolation: $\cos(F_1+\phi_1')=1.00382-(P'\times 0.00100893)$

$x'=991.15\sin(F_1+\phi'_1)-105.57 \quad T_1'=R_1\tan\frac{\phi_1'}{2} \quad T'=R\tan\frac{\phi'}{2}$

$N=6$	$F=9° 32'$	$D=21°$	$R=274.37$
$N_1=10$	$F_1=5° 44'$	$D'=7°$	$R_1=819.02$

P	x	T_1	ϕ_1	T	ϕ	$(F_1+\phi_1)=(F+\phi)$
16						
17						
18						
19	70.70	27.28	3° 53′ 16″	0.21	0° 05′ 16″	9° 37′ 16″
20	76.50	30.00	4° 11′ 47″	0.95	0° 23′ 47″	9° 55′ 47″
25	103.12	40.17	5° 36′ 56″	4.35	1° 48′ 56″	11° 20′ 56″
30	126.69	49.21	6° 52′ 41″	7.37	3° 04′ 41″	12° 36′ 41″
40	167.66	65.09	9° 05′ 17″	12.67	5° 17′ 17″	14° 49′ 17″
50	203.03	78.97	11° 00′ 52″	17.30	7° 12′ 52″	16° 44′ 52″
60	234.53	91.48	12° 44′ 47″	21.46	8° 56′ 47″	18° 28′ 47″

For exact interpolation: $\cos(F_1+\phi_1')=1.0033138-(P'\times 0.000914587)$

$x'=1093.39\sin(F_1+\phi_1')-112.04 \quad T_1'=R_1\tan\frac{\phi_1'}{2} \quad T'=R\tan\frac{\phi'}{2}$

TABLE 24 — *Continued*

$N=7$	$F=8°\ 10'$	$D=15°$	$R=383.065$
$N_1=8$	$F_1=7°\ 09'$	$D_1=11°$	$R_1=521.671$

P	x	T_1	ϕ_1	T	ϕ	$(F_1+\phi_1)=(F+\phi)$
16	45.39	10.75	2° 21′ 43″	4.50	1° 20′ 43″	9° 30′ 43″
17	51.24	12.47	2° 44′ 16″	5.75	1° 43′ 16″	9° 53′ 16″
18	56.88	14.12	3° 06′ 00″	6.97	2° 05′ 00″	10° 15′ 00″
19	62.31	15.71	3° 27′ 00″	8.14	2° 26′ 00″	10° 36′ 00″
20	67.57	17.26	3° 47′ 20″	9.27	2° 46′ 20″	10° 56′ 20″
25	91.08	24.42	5° 20′ 53″	14.16	4° 19′ 53″	12° 29′ 53″
30	113.00	30.70	6° 44′ 08″	19.13	5° 43′ 08″	13° 53′ 08″
40	150.07	41.82	9° 10′ 00″	27.29	8° 09′ 00″	16° 19′ 00″
50	182.02	51.55	11° 17′ 14″	34.43	10° 16′ 14″	18° 26′ 14″
60	210.43	60.33	13° 11′ 41″	40.86	12° 10′ 41″	20° 20′ 41″

For exact interpolation: $\cos(F_1+\phi_1')=1.003938-(P'\times 0.00110527)$

$x'=904.74\sin(F_1+\phi_1')-104.12 \quad T_1'=R_1\tan\frac{\phi_1'}{2} \quad T'=R\tan\frac{\phi'}{2}$

$N=7$	$F=8°\ 10'$	$D=15°$	$R=383.065$
$N_1=9$	$F_1=6°\ 22'$	$D_1=9°$	$R_1=637.275$

P	x	T_1	ϕ_1	T	ϕ	$(F_1+\phi_1)=(F+\phi)$
16	48.86	14.35	2° 34′ 44″	2.60	0° 46′ 44″	8° 56′ 44″
17	55.23	16.36	2° 56′ 28″	3.81	1° 08′ 28″	9° 18′ 28″
18	61.07	18.22	3° 16′ 28″	4.93	° 28′ 28″	9° 38′ 28″
19	66.85	20.05	3° 36′ 15″	6.03	1° 48′ 15″	9° 58′ 15″
20	72.45	21.83	3° 55′ 24″	7.10	2° 07′ 24″	10° 17′ 24″
25	98.12	30.01	5° 23′ 30″	12.01	3° 35′ 30″	11° 45′ 30″
30	121.09	37.29	6° 41′ 53″	16.65	4° 53′ 53″	13° 03′ 53″
40	158.50	49.14	8° 59′ 09″	24.05	7° 11′ 09″	15° 21′ 09″
50	194.42	61.25	10° 58′ 51″	30.76	9° 10′ 51″	17° 20′ 51″
60	224.76	71.34	12° 46′ 28″	36.80	10° 58′ 28″	19° 08′ 28″

For exact interpolation: $\cos(F_1+\phi_1')=1.00351-(P'\times 0.00098)$

$x'=1020.34\sin(F_1+\phi_1')-109.80 \quad T_1'=R_1\tan\frac{\phi_1'}{2} \quad T'=R\tan\frac{\phi'}{2}$

TABLE 24 — *Continued*

$N=7$	$F=8°\ 10'$	$D=15°$	$R=383.065$
$N_1=9\frac{1}{2}$	$F_1=6°\ 02'$	$D_1=8°$	$R_1=716.779$

P	x	T_1	ϕ_1	T	ϕ	$(F_1+\phi_1)=(F+\phi)$
16	50.85	16.34	2° 36′ 40″	1.60	0° 28′ 40″	8° 38′ 40″
17	57.30	18.46	2° 57′ 04″	2.73	0° 49′ 04″	8° 59′ 04″
18	63.31	20.52	3° 16′ 44″	3.83	1° 08′ 44″	9° 18′ 44″
19	69.91	22.70	3° 35′ 43′	4.89	1° 27′ 43″	9° 37′ 43″
20	75.31	24.41	3° 54′ 08″	5.91	1° 46′ 08″	9° 56′ 08″
25	101.92	33.26	5° 18′ 46″	10.63	3° 10′ 46″	11° 20′ 46″
30	125.49	41.13	6° 34′ 06″	14.83	4° 26′ 06″	12° 36′ 06″
40	166.51	54.95	8° 46′ 04″	22.20	6° 38′ 04″	14° 48′ 04″
50	201.94	67.03	10° 41′ 09″	28.64	8° 33′ 09″	16° 43′ 09″
60	233.50	77.93	12° 24′ 38″	34.45	10° 16′ 38″	18° 26′ 38″

For exact interpolation: $\cos(F_1+\phi_1')=1.003187-(P'\times 0.00090922)$

$x'=1099.84\sin(F_1+\phi_1')-114.46 \quad T_1'=R_1\tan\frac{\phi_1'}{2} \quad T'=R\tan\frac{\phi'}{2}$

$N=7$	$F=8°\ 10'$	$D=15°$	$R=383.065$
$N_1=10$	$F_1=5°\ 44'$	$D_1=7°$	$R_1=819.020$

P	x	T_1	ϕ_1	T	ϕ	$(F_1+\phi_1)=(F+\phi)$
16	53.06	18.51	2° 35′ 23″	0.52	0° 09′ 23″	8° 19′ 23″
17	59.84	20.85	2° 55′ 00″	1.62	0° 29′ 00″	8° 39′ 00″
18	66.23	23.06	3° 13′ 30″	2.65	0° 47′ 30″	8° 57′ 30″
19	72.48	25.21	3° 31′ 36″	3.65	1° 05′ 36″	9° 15′ 36″
20	78.49	27.29	3° 49′ 00″	4.62	1° 23′ 00″	9° 33′ 00″
25	106.22	36.90	5° 09′ 36″	9.12	2° 43′ 36″	10° 53′ 36″
30	130.80	45.47	6° 21′ 20″	13.12	3° 55′ 20″	12° 05′ 20″
40	173.69	60.53	8° 27′ 17″	20.15	6° 01′ 17″	14° 11′ 17″
50	210.73	73.69	10° 17′ 00″	26.28	7° 51′ 00″	16° 01′ 00″
60	243.77	85.57	11° 55′ 47″	31.82	9° 29′ 47″	17° 39′ 47″

For exact interpolation: $\cos(F_1+\phi_1')=1.0027758-(P'\times 0.0008319)$

$x'=1202.09\sin(F_1+\phi_1')-120.95 \quad T_1'=R_1\tan\frac{\phi_1'}{2} \quad T'=R\tan\frac{\phi'}{2}$

TABLE 24 — *Continued*

$N = 8$	$F = 7° 09'$	$D = 11°$	$R = 521.671$
$N_1 = 9$	$F_1 = 6° 22'$	$D_1 = 9°$	$R_1 = 637.275$

P	x	T_1	ϕ_1	T	ϕ	$(F_1 + \phi_1) = (F + \phi)$
16	50.95	11.84	2° 07′ 44″	6.13	1° 20′ 44″	8° 29′ 44″
17	57.52	13.67	2° 27′ 26″	7.62	1° 40′ 26″	8° 49′ 26″
18	63.84	15.43	2° 46′ 26″	9.06	1° 59′ 26″	9° 08′ 26″
19	69.95	17.13	3° 04′ 48″	10.46	2° 17′ 48″	9° 26′ 48″
20	76.87	18.78	3° 22′ 36″	11.81	2° 35′ 36″	9° 44′ 46″
25	103.03	26.39	4° 44′ 33″	18.03	3° 57′ 33″	11° 06′ 33″
30	127.14	33.17	5° 57′ 35″	23.58	5° 10′ 35″	12° 19′ 35″
40	169.14	45.09	8° 05′ 39″	33.33	7° 18′ 39″	14° 27′ 39″
50	205.46	55.51	9° 57′ 24″	41.85	9° 10′ 24″	16° 19′ 24″
60	237.85	64.91	11° 37′ 57″	49.54	10° 50′ 57″	17° 59′ 57″

For exact interpolation: $\cos(F_1 + \phi_1') = 1.0028329 - (P' \times 0.00086285)$

$x' = 1158.95 \sin(F_1 + \phi_1') - 120.26 \quad T_1' = R_1 \tan \frac{\phi_1'}{2} \quad T' = R \tan \frac{\phi'}{2}$

$N = 8$	$F = 7° 09'$	$D = 11°$	$R = 521.671$
$N_1 = 9\frac{1}{2}$	$F_1 = 6° 02'$	$D_1 = 8°$	$R_1 = 716.779$

P	x	T_1	ϕ_1	T	ϕ	$(F_1 + \phi_1) = (F + \phi)$
16	52.68	13.84	2° 12′ 42″	4.99	1° 05′ 42″	8° 14′ 42″
17	59.46	15.82	2° 31′ 42″	6.43	1° 24′ 42″	8° 33′ 42″
18	65.99	17.73	2° 50′ 01″	7.82	1° 43′ 01″	8° 52′ 01″
19	72.28	19.58	3° 07′ 44″	9.16	2° 00′ 44″	9° 09′ 44″
20	78.08	21.37	3° 24′ 54″	10.31	2° 15′ 54″	9° 26′ 54″
25	106.43	29.62	4° 43′ 59″	16.47	3° 36′ 59″	10° 45′ 59″
30	131.49	37.07	5° 54′ 29″	21.82	4° 47′ 29″	11° 56′ 29″
40	174.74	49.93	7° 58′ 09″	31.23	6° 51′ 09″	14° 00′ 09″
50	212.32	61.25	9° 46′ 06″	39.46	8° 39′ 06″	15° 48′ 06″
60	245.84	71.46	11° 23′ 12″	46.88	10° 16′ 12″	17° 25′ 12″

For exact interpolation: $\cos(F_1 + \phi_1') = 1.0025835 - (P' \times 0.000807461)$

$x' = 1238.45 \sin(F_1 + \phi_1') - 124.92 \quad T_1' = R_1 \tan \frac{\phi_1'}{2} \quad T' = R \tan \frac{\phi'}{2}$

TABLE 24 — *Continued*

$N = 8$	$F = 7° 09'$	$D = 11°$	$R = 521.671$
$N_1 = 10$	$F_1 = 5° 44'$	$D_1 = 7°$	$R_1 = 819.020$

P	x	T_1	ϕ_1	T	ϕ	$(F_1 + \phi_1) = (F + \phi)$
16	54.62	16.02	2° 14′ 30″	3.76	0° 49′ 30″	7° 58′ 30″
17	61.68	18.18	2° 32′ 39″	5.16	1° 07′ 39″	8° 16′ 39″
18	68.38	20.27	2° 50′ 09″	6.46	1° 25′ 09″	8° 34′ 09″
19	74.91	22.29	3° 07′ 05″	7.74	1° 42′ 05″	8° 51′ 05″
20	81.24	24.25	3° 23′ 30″	8.99	1° 58′ 30″	9° 07′ 30″
25	110.32	33.27	4° 39′ 10″	14.74	3° 14′ 10″	10° 23′ 10″
30	136.16	41.33	5° 46′ 40″	19.86	4° 21′ 40″	11° 30′ 40″
40	181.27	55.49	7° 45′ 09″	28.87	6° 20′ 09″	13° 29′ 09″
50	220.37	67.89	9° 28′ 38″	36.76	8° 03′ 38″	15° 12′ 38″
60	255.28	79.07	11° 01′ 44″	43.86	9° 36′ 44″	16° 45′ 44″

For exact interpolation: $\cos(F_1 + \phi_1') = 1.0022628 - (P' \times 0.000745884)$

$x' = 1340.69 \sin(F_1 + \phi_1') - 131.39 \quad T_1' = R_1 \tan \frac{\phi_1'}{2} \quad T' = R \tan \frac{\phi'}{2}$

TABLE 25

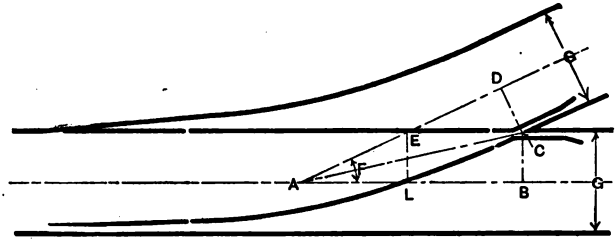

FIG. 2.

N	$N \times G$	ED	EC
4	19.00	9.27	9.73
5	23.75	11.65	12.10
6	28.43	14.03	14.40
7	32.96	16.39	16.57
8	37.67	18.76	18.91
9	42.37	21.12	21.25
9½	44.73	22.30	22.43
10	47.08	23.48	23.60
11	51.79	25.84	25.95
12	56.50	28.20	28.30
15	70.62	35.27	35.35
16	75.32	37.63	37.69
18	84.74	42.34	42.40
20	94.16	47.05	47.11
24	112.99	56.48	56.51

$$N \times G = \overline{AD} = \overline{AB}$$

TABLE 26

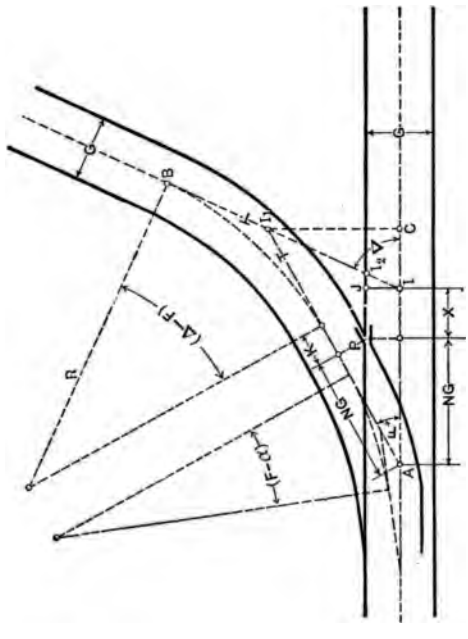

FIG 9.

When x is negative (−), measure the distance x from I towards C.

When x is positive (+), measure the distance x from I towards A.

TABLE 26 — *Continued*

Fig. 9.

$N=6$	$F=9° 32'$		$K=8' 00''$		$G=4.7083$		$NG=28.25$		$D=21° 00'$		$R=274.37$
Referred to Center Lines of both Tracks							Referred to Center Line of Spur and Gage Line of Main				
Δ	x	Diff.	II_1	Diff.	T	Diff.	I_2P	Diff.	I_2I_1	Diff.	Δ
9° 32′	−28.25	3.75					−14.23	2.31			9° 32′
10° 00′	−26.50	3.58	35.64	1.13	1.12	2.39	−13.15	2.34	22.08	0.09	10° 00′
11° 00′	−22.92	3.40	34.51	0.93	3.51	2.40	−10.81	2.36	22.17	0.09	11° 00′
12° 00′	−19.52	3.25	33.58	0.78	5.91	2.39	−8.45	2.37	22.26	0.08	12° 00′
13° 00′	−16.27	3.13	32.80	0.66	8.30	2.40	−6.08	2.39	22.34	0.07	13° 00′
14° 00′	−13.14	3.05	32.14	0.56	10.70	2.40	−3.69	2.39	22.41	0.07	14° 00′
15° 00′	−10.09	2.99	31.58	0.49	13.10	2.40	−1.30	2.40	22.48	0.07	15° 00′
16° 00′	−7.10	2.92	31.09	0.42	15.50	2.40	+1.10	2.42	22.55	0.07	16° 00′
17° 00′	−4.18	2.88	30.67	0.36	17.90	2.41	3.52	2.42	22.62	0.07	17° 00′
18° 00′	−1.30	2.84	30.31	0.31	20.31	2.41	5.94	2.44	22.69	0.07	18° 00′
19° 00′	+1.54	2.81	30.00	0.28	22.72	2.41	8.38	2.44	22.76	0.07	19° 00′
20° 00′	4.35	2.79	29.72	0.24	25.13	2.42	10.82	2.45	22.83	0.08	20° 00′
21° 00′	7.14	2.77	29.48	0.20	27.55	2.42	13.27	2.46	22.91	0.08	21° 00′
22° 00′	9.91	2.75	29.28	0.18	29.97	2.42	15.73	2.48	22.99	0.08	22° 00′
23° 00′	12.66	2.75	29.10	0.16	32.39	2.43	18.21	2.48	23.07	0.08	23° 00′
24° 00′	15.41	2.73	28.94	0.13	34.82	2.44	20.69	2.48	23.15	0.09	24° 00′
25° 00′	18.14	2.72	28.81	0.12	37.26	2.44	23.18	2.51	23.24	0.09	25° 00′
26° 00′	20.86	2.72	28.69	0.09	39.70	2.45	25.69	2.51	23.23	0.09	26° 00′
27° 00′	23.58	2.72	28.60	0.08	42.15	2.45	28.20	2.53	23.42	0.09	27° 00′
28° 00′	26.30	2.72	28.52	0.06	44.60	2.46	30.73	2.54	23.51	0.09	28° 00′
29° 00′	29.02	2.72	28.46	0.05	47.06	2.47	33.27	2.55	23.60	0.10	29° 00′
30° 00′	31.74	2.72	28.41	0.03	49.53	2.48	35.82	2.56	23.70	0.11	30° 00′
31° 00′	34.46	2.73	28.38	0.02	52.01	2.48	38.38	2.57	23.81	0.11	31° 00′
32° 00′	37.19	2.73	28.36	0.01	54.49	2.49	40.95	2.59	23.92	0.11	32° 00′

TABLE 26— *Continued*

$N=6$	$F=9° 32'$	$K=8' 00''$	$G=4.7083$	$NG=28.25$	$D=21° 00'$	$R=274.3$

Referred to Center Lines of both Tracks							Referred to Center Line of Spur and Gage Line of Main				
Δ	x	Diff.	II_1	Diff.	T	Diff.	I_2P	Diff.	I_2I_1	Diff.	Δ
33° 00′	+39.92	2.73	28.35	0.01	56.98	2.43	+43.54	2.59	24.03	0.11	33° 00′
34° 00′	42.66	2.74	28.35	0.00	59.49	2.51	46.15	2.61	24.15	0.12	34° 00′
35° 00′	45.40	2.74	28.37	0.02	62.00	2.51	48.76	2.61	24.27	0.12	35° 00′
36° 00′	48.14	2.74	28.39	0.02	64.52	2.52	51.38	2.62	24.39	0.12	36° 00′
37° 00′	50.92	2.78	28.43	0.04	67.05	2.53	54.05	2.67	24.52	0.13	37° 00′
38° 00′	53.70	2.78	28.47	0.04	69.60	2.55	56.72	2.67	24.65	0.13	38° 00′
39° 00′	56.48	2.78	28.53	0.06	72.15	2.55	59.40	2.68	24.79	0.14	39° 00′
40° 00′	59.28	2.80	28.59	0.06	74.72	2.57	62.09	2.68	24.93	0.14	40° 00′
41° 00′	62.09	2.81	28.66	0.07	77.29	2.57	64.80	2.71	25.07	0.14	41° 00′
42° 00′	64.92	2.83	28.75	0.09	79.88	2.59	67.53	2.73	25.22	0.15	42° 00′
43° 00′	67.76	2.84	28.84	0.09	82.49	2.61	70.28	2.75	25.38	0.16	43° 00′
44° 00′	70.62	2.86	28.93	0.09	85.11	2.62	73.05	2.77	25.54	0.16	44° 00′
45° 00′	73.49	2.87	29.04	0.11	87.74	2.63	75.84	2.79	25.71	0.17	45° 00′
46° 00′	76.38	2.89	29.16	0.12	90.38	2.64	78.65	2.81	25.88	0.17	46° 00′
47° 00′	79.29	2.91	29.28	0.12	93.05	2.67	81.49	2.84	26.06	0.18	47° 00′
48° 00′	82.22	2.93	29.41	0.13	95.72	2.67	84.34	2.85	26.24	0.18	48° 00′
49° 00′	85.17	2.95	29.55	0.14	98.42	2.70	87.22	2.86	26.43	0.19	49° 00′
50° 00′	88.14	2.97	29.70	0.15	101.13	2.71	90.11	2.89	26.63	0.20	50° 00′
51° 00′	91.13	2.99	29.86	0.16	103.86	2.73	93.04	2.93	26.83	0.20	51° 00′
52° 00′	94.15	3.02	30.02	0.16	106.60	2.74	95.99	2.95	27.04	0.21	52° 00′
53° 00′	97.19	3.04	30.20	0.18	109.37	2.77	98.96	2.97	27.25	0.21	53° 00′
54° 00′	100.25	3.06	30.38	0.18	112.15	2.78	101.96	3.00	27.47	0.22	54° 00′
55° 00′	103.33	3.08	30.57	0.19	114.96	2.81	104.98	3.02	27.70	0.23	55° 00′
56° 00′	106.45	3.12	30.77	0.20	117.78	2.82	108.04	3.06	27.93	0.23	56° 00′
57° 00′	109.59	3.14	30.98	0.21	120.63	2.85	111.12	3.08	28.17	0.24	57° 00′
58° 00′	112.76	3.17	31.20	0.22	123.50	2.87	114.23	3.11	28.42	0.25	58° 00′
		3.20		0.23		2.89		3.14		0.26	

TABLE 26 — *Continued*

$N=6$	$F=9° 32'$	$K=8' 00''$	$G=4.7083$	$NG=28.25$	$D=21° 00'$	$R=274.37$

Referred to Center Lines of both Tracks							Referred to Center Line of Spur and Gage Line of Main				
Δ	x	Diff.	II_1	Diff.	T	Diff.	I_2P	Diff.	I_2I_1	Diff.	Δ
59° 00′	+115.96	3.20	31.43	0.23	126.39	2.89	+117.37	3.14	28.26	0.26	59° 00′
60° 00′	119.19	3.23	31.66	0.23	129.30	2.91	120.55	3.18	28.94	0.26	60° 00′
61° 00′	122.45	3.26	31.91	0.25	132.24	2.94	123.75	3.20	29.21	0.27	61° 00′
62° 00′	125.74	3.29	32.16	0.25	135.21	2.97	126.99	3.24	29.49	0.28	62° 00′
63° 00′	129.06	3.32	32.42	0.26	138.19	2.98	130.26	3.27	29.78	0.29	63° 00′
64° 00′	132.42	3.36	32.70	0.28	141.21	3.02	133.57	3.31	30.08	0.30	64° 00′
65° 00′	135.82	3.40	32.99	0.29	144.25	3.04	136.92	3.35	30.39	0.31	65° 00′
66° 00′	139.25	3.43	33.28	0.29	147.32	3.07	140.30	3.38	30.70	0.31	66° 00′
67° 00′	142.72	3.47	33.59	0.31	150.42	3.10	143.72	3.42	31.03	0.33	67° 00′
68° 00′	146.23	3.51	33.90	0.31	153.55	3.13	147.18	3.46	31.36	0.33	68° 00′
69° 00′	149.78	3.55	34.23	0.33	156.71	3.16	150.68	3.50	31.71	0.35	69° 00′
70° 00′	153.37	3.59	34.57	0.34	159.90	3.19	154.22	3.54	32.07	0.36	70° 00′
71° 00′	157.00	3.63	34.92	0.35	163.12	3.22	157.81	3.59	32.43	0.36	71° 00′
72° 00′	160.68	3.68	35.29	0.37	166.38	3.26	161.44	3.63	32.81	0.38	72° 00′
73° 00′	164.40	3.72	35.66	0.37	169.67	3.29	165.12	3.68	33.20	0.39	73° 00′
74° 00′	168.17	3.77	36.05	0.39	173.00	3.33	168.85	3.73	33.60	0.40	74° 00′
75° 00′	171.99	3.82	36.46	0.41	176.37	3.37	172.62	3.77	34.02	0.42	75° 00′
76° 00′	175.86	3.87	36.87	0.41	179.77	3.40	176.45	3.83	34.45	0.43	76° 00′
77° 00′	179.79	3.93	37.30	0.43	183.21	3.44	180.33	3.88	34.89	0.44	77° 00′
78° 00′	183.77	3.98	37.75	0.45	186.69	3.48	184.27	3.94	35.34	0.45	78° 00′
79° 00′	187.80	4.03	38.21	0.46	190.22	3.53	188.26	3.99	35.81	0.47	79° 00′
80° 00′	191.88	4.08	38.69	0.48	193.78	3.56	192.30	4.04	36.29	0.48	80° 00′
81° 00′	196.04	4.16	39.18	0.49	197.40	3.62	196.41	4.11	36.78	0.49	81° 00′
82° 00′	200.25	4.21	39.69	0.51	201.05	3.65	200.58	4.17	37.30	0.52	82° 00′
83° 00′	204.53	4.28	40.22	0.53	204.76	3.71	204.82	4.24	37.84	0.54	83° 00′
84° 00′	208.88	4.35	40.76	0.54	208.51	3.75	209.12	4.30	38.39	0.55	84° 00′
		4.40		0.56		3.80		4.36		0.57	

Table 26 — *Continued*

$N=6$	$F=9° 32'$		$K=8' 00''$		$G=4.7083$		$NG=28.25$		$D=21° 00'$		$R=274.37$
Referred to Center Lines of both Tracks							Referred to Center Line of Spur and Gage Line of Main				
Δ	x	Diff.	II_1	Diff.	T	Diff.	I_2P	Diff.	I_2I_1	Diff.	Δ
85° 00′	+213.28	4.40	41.32	0.56	212.31	3.80	+213.48	4.36	38.96	0.57	85° 00′
86° 00′	217.76	4.48	41.91	0.59	216.17	3.86	217.92	4.44	39.55	0.59	86° 00′
87° 00′	222.31	4.55	42.51	0.60	220.08	3.91	222.44	4.52	40.15	0.60	87° 00′
88° 00′	226.94	4.63	43.13	0.62	224.04	3.96	227.02	4.56	40.78	0.63	88° 00′
89° 00′	231.64	4.70	43.78	0.65	228.06	4.02	231.68	4.66	41.43	0.65	89° 00′
90° 00′	236.43	4.79	44.45	0.67	232.13	4.07	236.43	4.75	42.10	0.67	90° 00′
92° 00′	246.25	9.82	45.86	1.41	240.48	8.25	246.17	9.74	43.50	1.40	92° 00′
94° 00′	256.44	10.19	47.37	1.51	249.07	8.59	256.27	10.10	45.01	1.51	94° 00′
96° 00′	267.01	10.57	48.99	1.62	257.95	8.88	266.76	10.49	46.63	1.62	96° 00′
98° 00′	278.00	10.99	50.74	1.75	267.12	9.17	277.66	10.90	48.36	1.73	98° 00′
100° 00′	289.43	11.43	52.62	1.88	276.61	9.49	289.01	11.35	50.22	1.86	100° 00′
102° 00′	301.35	11.92	54.64	2.02	286.44	9.83	300.85	11.84	52.23	2.01	102° 00′
104° 00′	313.79	12.44	56.82	2.18	296.64	10.20	313.21	12.36	54.39	2.16	104° 00′
106° 00′	326.79	13.00	59.18	2.36	307.23	10.59	326.12	12.91	56.73	2.34	106° 00′
108° 00′	340.40	13.62	61.73	2.55	318.23	11.00	339.64	13.52	59.25	2.52	108° 00′
110° 00′	354.71	14.31	64.50	2.77	329.70	11.47	353.85	14.21	61.99	2.74	110° 00′
112° 00′	369.72	15.01	67.50	3.00	341.65	11.95	368.77	14.92	64.97	2.98	112° 00′
114° 00′	385.54	15.82	70.77	3.27	354.14	12.49	384.49	15.72	68.20	3.23	114° 00′
116° 00′	402.22	16.68	74.34	3.57	367.20	13.06	401.07	16.58	71.72	3.52	116° 00′
118° 00′	419.86	17.64	78.25	3.91	380.89	13.69	418.61	17.54	75.58	3.86	118° 00′
120° 00′	438.56	18.70	82.52	4.27	395.26	14.37	437.20	18.59	79.80	4.22	120° 00′
122° 00′	458.42	19.86	87.22	4.70	410.37	15.11	456.94	19.74	84.45	4.65	122° 00′
124° 00′	479.57	21.15	92.40	5.18	426.28	15.91	477.98	21.04	89.56	5.11	124° 00′
126° 00′	502.15	22.58	98.13	5.73	443.09	16.81	500.44	22.46	95.22	5.66	126° 00′
128° 00′	526.34	24.19	104.48	6.35	460.87	17.78	524.50	24.06	101.50	6.28	128° 00′
130° 00′	552.30	25.96	111.56	7.08	479.72	18.85	550.33	25.83	108.48	6.98	130° 00′

TABLE 26 — *Continued*

$N=7$	$F=8°\ 10'$		$K=8'\ 00''$		$G=4.7083$		$NG=32.9581$		$D=15°\ 00'$		$R=383.065$
Referred to Center Lines of both Tracks							Referred to Center Line of Spur and Gage Line of Main				
Δ	x	Diff.	H_1	Diff.	T	Diff.	I_2P	Diff.	I_2I_1	Diff.	Δ
8° 10′	−32.96	4.88					−16.55	3.04			8° 10′
9° 00′	−28.89	4.61	39.72	1.20	2.79	3.34	−14.02	3.09	24.67	0.29	9° 00′
10° 00′	−24.28	4.39	38.52	0.97	6.13	3.34	−10.93	3.15	24.96	0.25	10° 00′
11° 00′	−19.89	4.22	37.55	0.81	9.47	3.35	−7.78	3.19	25.21	0.21	11° 00′
12° 00′	−15.67	4.11	36.74	0.67	12.82	3.35	−4.59	3.23	25.42	0.19	12° 00′
13° 00′	−11.56	4.01	36.07	0.56	16.17	3.35	−1.36	3.25	25.61	0.17	13° 00′
14° 00′	−7.55	3.93	35.51	0.48	19.52	3.35	+1.89	3.28	25.78	0.16	14° 00′
15° 00′	−3.62	3.88	35.03	0.41	22.87	3.36	5.17	3.30	25.94	0.15	15° 00′
16° 00′	+0.26	3.83	34.62	0.35	26.23	3.36	8.47	3.32	26.09	0.14	16° 00′
17° 00′	4.09	3.80	34.27	0.29	29.59	3.36	11.79	3.34	26.23	0.13	17° 00′
18° 00′	7.89	3.77	33.98	0.26	32.95	3.37	15.13	3.36	26.36	0.13	18° 00′
19° 00′	11.66	3.74	33.72	0.22	36.32	3.38	18.49	3.38	26.49	0.13	19° 00′
20° 00′	15.40	3.73	33.50	0.19	39.70	3.38	21.87	3.39	26.62	0.12	20° 00′
21° 00′	19.13	3.71	33.31	0.16	43.08	3.39	25.26	3.41	26.74	0.13	21° 00′
22° 00′	22.84	3.71	31.15	0.13	46.47	3.39	28.67	3.43	26.87	0.12	22° 00′
23° 00′	26.55	3.70	33.02	0.11	49.86	3.41	32.10	3.44	26.99	0.13	23° 00′
24° 00′	30.25	3.70	32.91	0.09	53.27	3.41	35.54	3.45	27.12	0.13	24° 00′
25° 00′	33.95	3.69	32.82	0.07	56.68	3.42	38.99	3.48	27.25	0.13	25° 00′
26° 00′	37.64	3.70	32.75	0.06	60.10	3.43	42.47	3.49	27.38	0.13	26° 00′
27° 00′	41.34	3.70	32.69	0.03	63.53	3.44	45.96	3.51	27.51	0.13	27° 00′
28° 00′	45.04	3.71	32.66	0.03	66.97	3.45	49.47	3.53	27.64	0.14	28° 00′
29° 00′	48.75	3.71	32.63	0.00	70.42	3.46	53.00	3.54	27.78	0.14	29° 00′
30° 00′	52.46	3.72	32.63	0.00	73.88	3.48	56.54	3.56	27.92	0.14	30° 00′
31° 00′	56.18	3.74	32.63	0.02	77.36	3.48	60.10	3.58	28.06	0.15	31° 00′
32° 00′	59.92	3.74	32.65	0.03	80.84	3.50	63.68	3.61	28.21	0.15	32° 00′
33° 00′	63.66	3.76	32.68	0.04	84.34	3.51	67.29	3.62	28.36	0.15	33° 00′

TABLE 26 — *Continued*

$N=7$ $F=8° 10'$ $K=8' 00''$ $G=4.7083$ $NG=32.9581$ $D=15° 00'$ $R=383.065$

Referred to Center Lines of both Tracks							Referred to Center Line of Spur and Gage Line of Main				
Δ	x	Diff.	II_1	Diff.	T	Diff.	I_2P	Diff.	I_2I_1	Diff.	Δ
34° 00′	+67.42	3.76	32.72	0.04	87.85	3.51	+70.91	3.62	28.51	0.15	34° 00′
35° 00′	71.19	3.77	32.77	0.05	91.38	3.53	74.55	3.64	28.67	0.16	35° 00′
36° 00′	74.97	3.78	32.84	0.07	94.92	3.54	78.21	3.66	28.83	0.16	36° 00′
37° 00′	78.77	3.80	32.91	0.07	98.47	3.55	81.90	3.69	29.00	0.17	37° 00′
38° 00′	82.59	3.82	33.00	0.09	102.04	3.57	85.61	3.71	29.17	0.17	38° 00′
39° 00′	86.43	3.84	33.09	0.09	105.63	3.59	89.34	3.73	29.35	0.18	39° 00′
40° 00′	90.29	3.86	33.19	0.10	109.24	3.61	93.09	3.75	29.53	0.18	40° 00′
41° 00′	94.17	3.88	33.31	0.12	112.86	3.62	96.87	3.78	29.72	0.19	41° 00′
42° 00′	98.07	3.90	33.43	0.12	116.51	3.65	100.68	3.81	29.91	0.19	42° 00′
43° 00′	101.99	3.92	33.56	0.13	120.17	3.66	104.51	3.83	30.11	0.20	43° 00′
44° 00′	195.94	3.95	33.70	0.14	123.85	3.68	108.37	3.86	30.31	0.20	44° 00′
45° 00′	109.91	3.97	33.85	0.15	127.55	3.70	112.26	3.89	30.52	0.21	45° 00′
46° 00′	113.90	3.99	34.01	0.16	131.28	3.73	116.18	3.92	30.74	0.22	46° 00′
47° 00′	117.93	4.03	34.18	0.17	135.02	3.74	120.12	3.94	30.96	0.22	47° 00′
48° 00′	121.98	4.05	34.36	0.18	138.79	3.77	124.10	3.98	31.19	0.23	48° 00′
49° 00′	126.06	4.08	34.55	0.19	142.59	3.80	128.11	4.01	31.43	0.24	49° 00′
50° 00′	130.17	4.11	34.74	0.19	146.41	3.82	132.15	4.04	31.67	0.24	50° 00′
51° 00′	134.32	4.15	34.95	0.21	150.25	3.84	136.22	4.07	31.92	0.25	51° 00′
52° 00′	138.49	4.17	35.17	0.22	154.12	3.87	140.33	4.11	32.18	0.26	52° 00′
53° 00′	142.70	4.21	35.39	0.22	158.02	3.90	144.48	4.15	32.44	0.26	53° 00′
54° 00′	146.95	4.25	35.62	0.23	161.94	3.92	148.66	4.18	32.72	0.28	54° 00′
55° 00′	151.23	4.28	35.87	0.25	165.90	3.96	152.88	4.22	33.00	0.28	55° 00′
56° 00′	155.54	4.31	36.13	0.26	169.88	3.98	157.13	4.25	33.29	0.29	56° 00′
57° 00′	159.90	4.36	36.39	0.26	173.90	4.02	161.43	4.30	33.58	0.29	57° 00′
58° 00′	164.30	4.40	36.67	0.28	177.95	4.05	165.77	4.34	33.89	0.31	58° 00′
59° 00′	168.73	4.43	36.95	0.28	182.03	4.08	170.15	4.38	34.21	0.32	59° 00′
		4.48		0.30		4.11		4.42		0.32	

TABLE 26 — *Continued*

$N=7$	$F=8°\ 10'$	$K=8'\ 00''$	$G=4.7083$	$NG=32.9581$	$D=15°\ 00'$	$R=383.065$

Referred to Center Lines of both Tracks							Referred to Center Line of Spur and Gage Line of Main				
Δ	x	Diff.	H_1	Diff.	T	Diff.	I_2P	Diff.	I_2I_4	Diff.	Δ
60° 00′	+173.21	4.48	37.25	0.30	186.14	4.11	+174.57	4.42	34.53	0.32	60° 00′
61° 00′	177.74	4.53	37.56	0.31	190.29	4.15	179.04	4.47	34.87	0.34	61° 00′
62° 00′	182.31	4.57	37.88	0.32	194.48	4.19	183.56	4.52	35.21	0.34	62° 00′
63° 00′	186.93	4.62	38.21	0.33	198.70	4.22	188.13	4.57	35.57	0.36	63° 00′
64° 00′	191.59	4.66	38.55	0.34	202.96	4.26	192.74	4.61	35.93	0.36	64° 00′
65° 00′	196.31	4.72	38.91	0.36	207.27	4.31	197.40	4.66	36.31	0.38	65° 00′
66° 00′	201.07	4.76	39.27	0.36	211.61	4.34	202.12	4.72	36.70	0.39	66° 00′
67° 00′	205.89	4.82	39.65	0.38	215.99	4.38	206.89	4.77	37.10	0.40	67° 00′
68° 00′	210.77	4.88	40.05	0.40	220.42	4.43	211.72	4.83	37.51	0.41	68° 00′
69° 00′	215.70	4.93	40.45	0.40	224.89	4.47	216.60	4.88	37.93	0.42	69° 00′
70° 00′	220.69	4.99	40.87	0.42	229.41	4.52	221.55	4.95	38.37	0.44	70° 00′
71° 00′	225.74	5.05	41.30	0.43	233.98	4.57	226.55	5.00	38.82	0.45	71° 00′
72° 00′	230.85	5.11	41.75	0.45	238.59	4.61	231.62	5.07	39.28	0.46	72° 00′
73° 00′	236.03	5.18	42.22	0.47	243.26	4.67	236.75	5.13	39.76	0.48	73° 00′
74° 00′	241.27	5.24	42.70	0.48	247.97	4.71	241.95	5.20	40.25	0.49	74° 00′
75° 00′	246.59	5.32	43.19	0.49	252.74	4.77	247.22	5.27	40.76	0.51	75° 00′
76° 00′	251.97	5.38	43.70	0.51	257.57	4.83	252.56	5.34	41.28	0.52	76° 00′
77° 00′	257.43	5.46	44.23	0.53	262.45	4.88	257.97	5.41	41.81	0.55	77° 00′
78° 00′	262.96	5.53	44.78	0.55	267.39	4.94	263.46	5.49	42.37	0.56	78° 00′
79° 00′	268.57	5.61	45.35	0.57	272.40	5.00	269.03	5.57	42.95	0.58	79° 00′
80° 00′	274.26	5.69	45.93	0.58	277.46	5.06	274.67	5.64	43.54	0.59	80° 00′
81° 00′	280.03	5.77	46.53	0.60	282.59	5.13	280.40	5.73	44.15	0.61	81° 00′
82° 00′	285.89	5.86	47.15	0.62	287.79	5.20	286.22	5.82	44.78	0.63	82° 00′
83° 00′	291.84	5.95	47.80	0.65	293.05	5.26	292.13	5.91	45.43	0.65	83° 00′
84° 00′	297.88	6.04	48.47	0.67	298.39	5.34	298.13	6.00	46.10	0.67	84° 00′
85° 00′	304.01	6.13	49.16	0.69	303.79	5.40	304.22	6.09	46.79	0.69	85° 00′
		6.24		0.71		5.49		6.19		0.72	

TABLE 26 — *Continued*

$N=7$ $F=8° 10'$ $K=8' 00''$ $G=4.7083$ $NG=32.9581$ $D=15° 00'$ $R=383.065$

Referred to Center Lines of both Tracks							Referred to Center Line of Spur and Gage Line of Main				
Δ	x	Diff.	II_1	Diff.	T	Diff.	I_2P	Diff.	I_2I_1	Diff.	Δ
86° 00′	+310.25	6.24	49.87	0.71	309.28	5.49	+310.41	6.19	47.51	0.72	86° 00′
87° 00′	316.58	6.33	50.61	0.74	314.84	5.56	316.71	6.30	48.25	0.74	87° 00′
88° 00′	323.02	6.44	51.37	0.76	320.48	5.64	323.11	6.40	49.02	0.77	88° 00′
89° 00′	329.58	6.56	52.13	0.76	326.21	5.73	329.62	6.51	49.81	0.79	89° 00′
90° 00′	336.23	6.65	52.98	0.85	332.02	5.81	336.23	6.61	50.63	0.82	90° 00′
92° 00′	349.91	13.68	54.70	1.72	343.91	11.89	349.83	13.60	52.35	1.72	92° 00′
94° 00′	364.09	14.18	56.55	1.85	356.17	12.26	363.93	14.10	54.19	1.84	94° 00′
96° 00′	378.81	14.72	58.53	1.98	368.85	12.68	378.56	14.63	56.17	1.98	96° 00′
98° 00′	394.11	15.30	60.66	2.13	381.95	13.10	393.77	15.21	58.29	2.12	98° 00′
100° 00′	410.03	15.92	62.96	2.29	395.52	13.57	409.61	15.83	60.57	2.28	100° 00′
102° 00′	426.63	16.60	65.43	2.47	409.59	14.07	426.13	16.52	63.03	2.46	102° 00′
104° 00′	443.95	17.32	68.10	2.67	424.19	14.60	443.37	17.24	65.67	2.64	104° 00′
106° 00′	462.07	18.12	70.98	2.88	439.37	15.18	461.39	18.02	68.53	2.86	106° 00′
108° 00′	481.04	18.97	74.10	3.12	455.17	15.80	480.28	18.89	71.63	3.10	108° 00′
110° 00′	500.95	19.91	77.49	3.39	471.64	16.47	500.09	19.81	74.98	3.35	110° 00′
112° 00′	521.87	20.92	81.17	3.68	488.83	17.19	520.92	20.83	78.63	3.65	112° 00′
114° 00′	543.90	22.03	85.18	4.01	506.81	17.98	542.85	21.93	82.60	3.97	114° 00′
116° 00′	567.14	23.24	89.55	4.37	525.63	18.82	566.00	23.15	86.93	4.33	116° 00′
118° 00′	591.72	24.56	94.33	4.78	545.38	19.75	590.47	24.47	91.67	4.74	118° 00′
120° 00′	617.77	26.05	99.58	5.25	566.14	20.76	616.41	25.94	96.86	5.19	120° 00′
122° 00′	645.44	27.67	105.35	5.77	587.99	21.85	643.97	27.56	102.58	5.72	122° 00′
124° 00′	674.91	29.47	111.72	6.37	611.05	23.06	673.33	29.36	108.88	6.30	124° 00′
126° 00′	706.38	31.47	118.77	7.05	635.43	24.38	704.67	31.34	115.86	6.98	126° 00′
128° 00′	740.08	33.70	126.59	7.82	661.26	25.83	738.24	33.57	123.60	7.74	128° 00′
130° 00′	776.28	36.20	135.31	8.72	688.70	27.44	774.30	36.06	132.23	8.63	130° 00′

TABLE 26 — *Continued*

$N=8$ $F=7°\,09'$ $K=8'\,00''$ $G=4.7083$ $NG=37.6664$ $D=11°\,00'$ $R=521.6714$

Referred to Center Lines of both Tracks							Referred to Center Line of Spur and Gage Line of Main				
Δ	x	Diff.	II_1	Diff.	T	Diff.	I_2P	Diff.	I_2I_1	Diff.	Δ
7° 09′	−37.67	6.23	44.29	1.25	3.87	4.55	−18.90	3.84	27.38	0.61	7° 09′
8° 00′	−32.39	5.89	43.04	1.01	8.42	4.56	−15.64	3.99	27.99	0.49	8° 00′
9° 00′	−26.50	5.63	42.03	0.80	12.98	4.55	−11.65	4.13	28.48	0.41	9° 00′
10° 00′	−20.87	5.44	41.23	0.67	17.53	4.56	−7.52	4.20	28.89	0.35	10° 00′
11° 00′	−15.43	5.32	40.56	0.54	22.09	4.56	−3.32	4.28	29.24	0.31	11° 00′
12° 00′	−10.11	5.21	40.02	0.46	26.65	4.57	+0.96	4.34	29.55	0.28	12° 00′
13° 00′	−4.90	5.14	39.56	0.39	31.22	4.57	5.30	4.38	29.83	0.25	13° 00′
14° 00′	+0.24	5.08	39.17	0.32	35.79	4.58	9.68	4.43	30.08	0.23	14° 00′
15° 00′	5.32	5.03	38.85	0.27	40.37	4.58	14.11	4.45	30.31	0.22	15° 00′
16° 00′	10.35	5.01	38.58	0.23	44.95	4.59	18.56	4.50	30.53	0.20	16° 00′
17° 00′	15.36	4.97	38.35	0.19	49.54	4.60	23.06	4.52	30.73	0.20	17° 00′
18° 00′	20.33	4.96	38.16	0.16	54.14	4.61	27.58	4.54	30.93	0.19	18° 00′
19° 00′	25.29	4.94	38.00	0.13	58.75	4.61	32.12	4.58	31.12	0.18	19° 00′
20° 00′	30.23	4.93	37.87	0.11	63.36	4.62	36.70	4.59	31.30	0.18	20° 00′
21° 00′	35.16	4.93	37.76	0.08	67.98	4.64	41.29	4.63	31.48	0.18	21° 00′
22° 00′	40.09	4.93	37.68	0.06	72.62	4.65	45.92	4.64	31.66	0.17	22° 00′
23° 00′	45.02	4.91	37.62	0.04	77.27	4.65	50.56	4.66	31.83	0.18	23° 00′
24° 00′	49.93	4.94	37.58	0.03	81.92	4.68	55.22	4.70	32.01	0.17	24° 00′
25° 00′	54.87	4.94	37.55	0.00	86.60	4.68	59.92	4.72	32.18	0.18	25° 00′
26° 00′	59.81	4.95	37.55	0.00	91.28	4.70	64.64	4.74	32.36	0.18	26° 00′
27° 00′	64.76	4.96	37.55	0.03	95.98	4.71	69.38	4.77	32.54	0.18	27° 00′
28° 00′	69.72	4.97	37.58	0.03	100.69	4.73	74.15	4.79	32.72	0.18	28° 00′
29° 00′	74.69	4.99	37.61	0.05	105.42	4.75	78.94	4.81	32.90	0.19	29° 00′
30° 00′	79.69	5.00	37.66	0.06	110.17	4.77	83.75	4.85	33.09	0.19	30° 00′
31° 00′	84.68	5.02	37.72	0.08	114.94	4.78	88.60	4.87	33.28	0.19	31° 00′
32° 00′	89.70	5.03					93.47	4.89			32° 00′

TABLE 26 — *Continued*

$N=8$	$F=7° 09'$	$K=8' 00''$	$G=4.7083$	$NG=37.6664$	$D=11° 00'$	$R=521.6714$

Referred to Center Lines of both Tracks							Referred to Center Line of Spur and Gage Line of Main				
Δ	x	Diff.	II_1	Diff.	T	Diff.	I_2P	Diff.	I_2I_1	Diff.	Δ
33° 00′	+94.73	5.03	37.80	0.08	119.72	4.78	+98.36	4.89	33.47	0.19	33° 00′
34° 00′	99.79	5.06	37.88	0.08	124.52	4.80	103.28	4.92	33.67	0.20	34° 00′
35° 00′	104.87	5.08	37.98	0.10	129.34	4.82	108.23	4.95	33.87	0.20	35° 00′
36° 00′	109.98	5.11	38.08	0.10	134.19	4.85	113.22	4.99	34.08	0.21	36° 00′
37° 00′	115.10	5.12	38.20	0.12	139.05	4.86	118.23	5.01	34.29	0.21	37° 00′
38° 00′	120.26	5.16	38.33	0.13	143.94	4.89	123.27	5.04	34.51	0.22	38° 00′
39° 00′	125.44	5.18	38.47	0.14	148.85	4.91	128.34	5.07	34.73	0.22	39° 00′
40° 00′	130.65	5.21	38.62	0.15	153.78	4.93	133.45	5.11	34.96	0.23	40° 00′
41° 00′	135.88	5.23	38.78	0.16	158.74	4.96	138.59	5.14	35.19	0.23	41° 00′
42° 00′	141.16	5.28	38.95	0.17	163.73	4.99	143.77	5.18	35.43	0.24	42° 00′
43° 00′	146.47	5.31	39.13	0.18	168.74	5.01	148.99	5.22	35.67	0.24	43° 00′
44° 00′	151.80	5.33	39.32	0.19	173.79	5.05	154.24	5.25	35.93	0.26	44° 00′
45° 00′	157.17	5.37	39.52	0.20	178.86	5.07	159.53	5.29	36.19	0.26	45° 00′
46° 00′	162.58	5.41	39.73	0.21	183.97	5.11	164.86	5.33	36.46	0.27	46° 00′
47° 00′	168.03	5.45	39.95	0.22	189.10	5.13	170.22	5.36	36.73	0.27	47° 00′
48° 00′	173.52	5.49	40.18	0.23	194.27	5.17	175.64	5.42	37.01	0.28	48° 00′
49° 00′	179.04	5.52	40.42	0.24	199.47	5.20	181.09	5.45	37.30	0.29	49° 00′
50° 00′	184.61	5.57	40.67	0.25	204.07	5.23	186.59	5.50	37.60	0.30	50° 00′
51° 00′	190.22	5.61	40.94	0.27	209.97	5.27	192.13	5.54	37.91	0.31	51° 00′
52° 00′	195.88	5.66	41.21	0.27	215.28	5.31	197.72	5.59	38.22	0.31	52° 00′
53° 00′	201.59	5.71	41.50	0.29	220.63	5.35	203.36	5.64	38.55	0.33	53° 00′
54° 00′	207.34	5.75	41.79	0.29	226.02	5.39	209.05	5.69	38.88	0.33	54° 00′
55° 00′	213.14	5.80	42.10	0.31	231.45	5.43	214.79	5.74	39.23	0.35	55° 00′
56° 00′	219.00	5.86	42.42	0.32	236.92	5.47	220.58	5.78	39.58	0.35	56° 00′
57° 00′	224.90	5.90	42.75	0.33	242.43	5.51	226.43	5.85	39.94	0.36	57° 00′
58° 00′	230.87	5.97	43.09	0.34	247.99	5.56	232.34	5.91	40.32	0.36	58° 00′
59° 00′	236.89	6.02	43.45	0.36	253.59	5.60	238.30	5.96	40.70	0.38	59° 00′
		6.07		0.37		5.65		6.02		0.40	

TABLE 26 — *Continued*

$N=8$	$F=7° 09'$	$K=8' 00''$	$G=4.7083$	$NG=37.6664$	$D=11° 00'$	$R=521.6714$

Referred to Center Lines of both Tracks							Referred to Center Line of Spur and Gage Line of Main				
Δ	x	Diff.	H_1	Diff.	T	Diff.	I_2P	Diff.	I_2I_1	Diff.	Δ
60° 00′	+242.96	6.07	43.82	0.37	259.24	5.65	+244.32	6.02	41.10	0.40	60° 00′
61° 00′	249.10	6.14	44.20	0.38	264.94	5.70	250.40	6.08	41.51	0.41	61° 00′
62° 00′	255.30	6.20	44.59	0.39	270.70	5.76	256.55	6.15	41.93	0.42	62° 00′
63° 00′	261.57	6.27	45.00	0.41	276.50	5.80	262.77	6.22	42.36	0.43	63° 00′
64° 00′	267.90	6.33	45.42	0.42	282.36	5.86	269.05	6.28	42.80	0.44	64° 00′
65° 00′	274.30	6.40	45.86	0.44	288.28	5.92	275.40	6.35	43.26	0.46	65° 00′
66° 00′	280.77	6.47	46.31	0.45	294.25	5.97	281.82	6.42	43.73	0.47	66° 00′
67° 00′	287.31	6.54	46.77	0.46	300.28	6.03	288.31	6.49	44.21	0.48	67° 00′
68° 00′	293.93	6.62	47.25	0.48	306.37	6.09	294.88	6.57	44.71	0.50	68° 00′
69° 00′	300.63	6.70	47.75	0.50	312.53	6.16	301.53	6.65	45.23	0.52	69° 00′
70° 00′	307.40	6.77	48.26	0.51	318.74	6.21	308.26	6.73	45.76	0.53	70° 00′
71° 00′	314.26	6.86	48.79	0.53	325.03	6.29	315.07	6.81	46.30	0.54	71° 00′
72° 00′	321.20	6.94	49.34	0.55	331.38	6.35	321.97	6.90	46.86	0.56	72° 00′
73° 00′	328.23	7.03	49.91	0.57	337.81	6.43	328.95	6.98	47.44	0.58	73° 00′
74° 00′	335.36	7.13	50.49	0.58	344.31	6.50	336.03	7.08	48.04	0.60	74° 00′
75° 00′	342.57	7.21	51.09	0.60	350.88	6.57	343.20	7.17	48.66	0.62	75° 00′
76° 00′	349.88	7.31	51.72	0.63	357.53	6.65	350.47	7.27	49.29	0.63	76° 00′
77° 00′	357.30	7.42	52.36	0.64	364.26	6.73	357.84	7.37	49.94	0.65	77° 00′
78° 00′	364.81	7.51	53.02	0.66	371.08	6.82	365.31	7.47	50.62	0.68	78° 00′
79° 00′	372.42	7.61	53.71	0.69	377.97	6.89	372.88	7.57	51.31	0.69	79° 00′
80° 00′	380.16	7.74	54.42	0.71	384.96	6.99	380.58	7.70	52.03	0.72	80° 00′
81° 00′	388.01	7.85	55.15	0.73	392.04	7.08	388.38	7.80	52.76	0.73	81° 00′
82° 00′	395.97	7.96	55.91	0.76	399.21	7.17	396.30	7.92	53.53	0.77	82° 00′
83° 00′	404.05	8.08	56.70	0.79	406.48	7.27	404.34	8.04	54.32	0.79	83° 00′
84° 00′	412.26	8.21	57.50	0.80	413.84	7.36	412.51	8.17	55.14	0.82	84° 00′
85° 00′	420.60	8.34	58.34	0.84	421.31	7.47	420.80	8.29	55.98	0.84	85° 00′
		8.47		0.87		7.58		8.43		0.87	

TABLE 26 — *Continued*

$N=8$	$F=7° 09'$	$K=8' 00''$	$G=4.7083$	$NG=37.6664$	$D=11° 00'$	$R=521.6714$

Referred to Center Lines of both Tracks							Referred to Center Line of Spur and Gage Line of Main				
Δ	x	Diff.	II_1	Diff.	T	Diff.	I_2P	Diff.	I_2I_1	Diff.	Δ
86° 00′	+429.07	8.47	59.21	0.87	428.89	7.58	+429.23	8.43	56.85	0.87	86° 00′
87° 00′	437.67	8.60	60.10	0.89	436.57	7.68	437.80	8.57	57.74	0.89	87° 00′
88° 00′	446.43	8.76	61.03	0.93	444.37	7.80	446.51	8.71	58.67	0.93	88° 00′
89° 00′	455.34	8.91	61.99	0.96	452.28	7.91	455.38	8.87	59.63	0.96	89° 00′
90° 00′	464.39	9.05	62.97	0.98	460.32	8.04	464.39	9.01	60.62	0.99	90° 00′
92° 00′	482.98	18.59	65.06	2.09	476.77	16.45	482.90	18.51	62.67	2.09	92° 00′
94° 00′	502.25	19.27	67.30	2.24	493.75	16.98	502.09	19.19	64.94	2.23	94° 00′
96° 00′	522.26	20.01	69.70	2.40	511.30	17.55	522.01	19.92	67.34	2.40	96° 00′
98° 00′	543.06	20.80	72.28	2.58	529.47	18.17	542.73	20.72	69.91	2.57	98° 00′
100° 00′	564.70	21.64	75.06	2.78	548.29	18.82	564.29	21.56	72.67	2.76	100° 00′
102° 00′	587.27	22.57	78.06	3.00	567.81	19.52	586.77	22.48	75.65	2.98	102° 00′
104° 00′	610.83	23.56	81.29	3.23	588.09	20.28	610.24	23.47	78.87	3.22	104° 00′
106° 00′	635.46	24.63	84.79	3.50	609.18	29.09	634.79	24.55	82.34	3.47	106° 00′
108° 00′	661.26	25.80	88.57	3.78	631.15	21.97	660.50	25.71	86.10	3.76	108° 00′
110° 00′	688.33	27.07	92.68	4.11	654.07	22.92	687.47	26.97	90.17	4.07	110° 00′
112° 00′	716.78	28.45	97.14	4.46	678.02	23.95	715.83	28.36	94.60	4.43	112° 00′
114° 00′	746.74	29.96	102.01	4.87	703.07	25.05	745.69	29.86	99.43	4.83	114° 00′
116° 00′	778.35	31.61	107.32	5.31	729.34	26.27	777.21	31.52	104.70	5.27	116° 00′
118° 00′	811.78	33.43	113.13	5.81	756.91	27.57	810.53	33.32	110.47	5.77	118° 00′
120° 00′	847.21	35.43	119.51	6.38	785.92	29.01	845.85	35.32	116.80	6.33	120° 00′
122° 00′	884.85	37.64	126.53	7.02	816.50	30.58	883.38	37.53	123.76	6.96	122° 00′
124° 00′	924.93	40.08	134.28	7.75	848.79	32.29	923.34	39.96	131.44	7.68	124° 00′
126° 00′	967.73	42.80	142.87	8.59	882.98	34.19	966.02	42.68	139.96	8.52	126° 00′
128° 00′	1013.57	45.84	152.40	9.53	919.24	36.26	1011.73	45.71	149.42	9.46	128° 00′
130° 00′	1062.80	49.23	163.04	10.64	957.81	38.57	1060.83	49.10	159.97	10.55	130° 00′

TABLE 26 — *Continued*

$N=9$	$F=6°\ 22'$	$K=8'\ 00''$	$G=4.7083$	$NG=42.3747$	$D=9°\ 00'$	$R=637.2747$

Referred to Center Lines of both Tracks							Referred to Center Line of Spur and Gage Line of Main				
Δ	x	Diff.	II_1	Diff.	T	Diff.	I_2P	Diff.	I_2I_1	Diff.	Δ
06° 22′	−42.37	7.54					−21.28	4.69			06° 22′
7° 00′	−37.49	7.29	49.04	1.66	3.52	5.56	−18.31	4.86	29.72	0.74	7° 00′
8° 00′	−30.20	6.92	47.38	1.29	9.08	5.57	−13.45	5.04	30.46	0.58	8° 00′
9° 00′	−23.28	6.67	46.09	1.01	14.65	5.56	−8.41	5.15	31.04	0.48	9° 00′
10° 00′	−16.16	6.48	45.08	0.82	20.21	5.57	−3.26	5.24	31.52	0.40	10° 00′
11° 00′	−10.13	6.34	44.26	0.67	25.78	5.57	+1.98	5.31	31.92	0.35	11° 00′
12° 00′	−3.79	6.25	43.59	0.55	31.35	5.58	7.29	5.36	32.27	0.30	12° 00′
13° 00′	+2.46	6.17	43.04	0.46	36.93	5.58	12.65	5.42	32.57	0.28	13° 00′
14° 00′	8.63	6.11	42.58	0.39	42.51	5.59	18.07	5.46	32.85	0.25	14° 00′
15° 00′	14.74	6.07	42.19	0.32	48.10	5.60	23.53	5.49	33.10	0.23	15° 00′
16° 00′	20.81	6.04	41.87	0.27	53.70	5.61	29.02	5.53	33.33	0.22	16° 00′
17° 00′	26.85	6.01	41.60	0.23	59.31	5.61	34.55	5.55	33.55	0.20	17° 00′
18° 00′	32.86	6.00	41.37	0.19	64.92	5.62	40.10	5.59	33.75	0.20	18° 00′
19° 00′	38.86	5.98	41.18	0.15	70.54	5.64	45.69	5.62	33.95	0.20	19° 00′
20° 00′	44.84	5.98	41.03	0.12	76.18	5.64	51.31	5.64	34.15	0.19	20° 00′
21° 00′	50.82	5.98	40.91	0.10	81.82	5.66	56.95	5.67	34.34	0.18	21° 00′
22° 00′	56.80	5.98	40.81	0.07	87.48	5.68	62.62	5.70	34.52	0.19	22° 00′
23° 00′	62.78	5.98	40.74	0.06	93.16	5.69	68.32	5.73	34.71	0.18	23° 00′
24° 00′	68.76	5.99	40.68	0.03	98.85	5.70	74.05	5.75	34.89	0.19	24° 00′
25° 00′	74.75	6.00	40.65	0.01	104.55	5.72	79.80	5.78	35.08	0.19	25° 00′
26° 00′	80.75	6.02	40.64	0.00	110.27	5.74	85.58	5.81	35.27	0.18	26° 00′
27° 00′	86.77	6.03	40.64	0.02	116.01	5.75	91.39	5.84	35.45	0.19	27° 00′
28° 00′	92.80	6.04	40.66	0.03	121.76	5.77	97.23	5.86	35.64	0.20	28° 00′
29° 00′	98.84	6.07	40.69	0.05	127.53	5.80	103.09	5.90	35.84	0.19	29° 00′
30° 00′	104.91	6.09	40.74	0.06	133.33	5.81	108.99	5.93	36.03	0.20	30° 00′
31° 00′	111.00	6.11	40.80	0.08	139.14	5.84	114.92	5.95	36.23	0.21	31° 00′

TABLE 26 — *Continued*

$N=9$	$F=6° 22'$	$K=8' 00''$	$G=4.7083$	$NG=42.3747$	$D=9° 00'$	$R=637.2747$

Referred to Center Lines of both Tracks							Referred to Center Line of Spur and Gage Line of Main				
Δ	x	Diff.	II_1	Diff.	T	Diff.	I_2P	Diff.	I_2I_1	Diff.	Δ
32° 00′	+117.11	6.11	40.88	0.08	144.98	5.84	+120.87	5.95	36.44	0.21	32° 00′
33° 00′	123.24	6.13	40.97	0.09	150.84	5.86	126.87	6.00	36.65	0.21	33° 00′
34° 00′	129.40	6.16	41.07	0.10	156.73	5.87	132.89	6.02	36.86	0.21	34° 00′
35° 00′	135.58	6.18	41.18	0.11	162.64	5.91	138.95	6.06	37.08	0.22	35° 00′
36° 00′	141.80	6.22	41.30	0.12	168.57	5.93	145.05	6.10	37.30	0.22	36° 00′
37° 00′	148.05	6.25	41.44	0.14	174.54	5.97	151.18	6.13	37.52	0.22	37° 00′
38° 00′	154.33	6.28	41.59	0.15	180.53	5.99	157.35	6.17	37.76	0.24	38° 00′
39° 00′	160.65	6.32	41.75	0.16	186.55	6.02	163.55	6.20	38.01	0.25	39° 00′
40° 00′	167.00	6.35	41.92	0.17	192.61	6.06	169.80	6.25	38.26	0.25	40° 00′
41° 00′	173.38	6.38	42.10	0.18	198.69	6.08	176.09	6.29	38.51	0.25	41° 00′
42° 00′	179.81	6.43	42.29	0.19	204.81	6.12	182.42	6.33	38.77	0.26	42° 00′
43° 00′	186.28	6.47	42.49	0.20	210.96	6.15	188.80	6.38	39.04	0.27	43° 00′
44° 00′	192.78	6.50	42.71	0.22	217.15	6.19	195.22	6.42	39.32	0.28	44° 00′
45° 00′	199.33	6.55	42.93	0.22	223.38	6.23	201.69	6.47	39.60	0.28	45° 00′
46° 00′	205.93	6.60	43.17	0.24	229.64	6.26	208.20	6.51	39.89	0.29	46° 00′
47° 00′	212.57	6.64	43.41	0.24	235.95	6.31	214.77	6.57	40.19	0.30	47° 00′
48° 00′	219.24	6.67	43.67	0.26	242.29	6.34	221.36	6.59	40.50	0.31	48° 00′
49° 00′	226.00	6.76	43.94	0.27	248.68	6.39	228.05	6.69	40.82	0.32	49° 00′
50° 00′	232.80	6.80	44.22	0.28	255.11	6.43	234.77	6.72	41.15	0.33	50° 00′
51° 00′	239.64	6.84	44.51	0.29	261.58	6.47	241.55	6.78	41.48	0.33	51° 00′
52° 00′	246.55	6.91	44.81	0.30	268.10	6.52	248.39	6.84	41.83	0.35	52° 00′
53° 00′	253.51	6.96	45.13	0.32	274.67	6.57	255.28	6.89	42.19	0.36	53° 00′
54° 00′	260.53	7.02	45.46	0.33	281.29	6.62	262.24	6.96	42.55	0.36	54° 00′
55° 00′	267.61	7.08	45.80	0.34	287.96	6.67	269.26	7.02	42.93	0.38	55° 00′
56° 00′	274.75	7.14	46.15	0.35	294.69	6.73	276.34	7.08	43.32	0.39	56° 00′
57° 00′	281.96	7.21	46.52	0.37	301.47	6.78	283.48	7.14	43.71	0.39	57° 00′
58° 00′	289.23	7.27	46.90	0.38	308.30	6.83	290.71	7.23	44.12	0.41	58° 00′
		7.35		0.39		6.89		7.28		0.43	

TABLE 26 — *Continued*

$N=9$	$F=6° 22'$		$K=8' 00''$		$G=4.7083$		$NG=42.3747$		$D=9° 00'$		$R=637.2742$
Referred to Center Lines of both Tracks							Referred to Center Line of Spur and Gage Line of Main				
Δ	x	Diff.	II_1	Diff.	T	Diff.	I_2P	Diff.	I_2Y_1	Diff.	Δ
59° 00′	+296.58	7.35	47.29	0.39	315.19	6.89	+297.99	7.28	44.55	0.43	59° 00′
60° 00′	304.00	7.42	47.70	0.41	322.14	6.95	305.36	7.37	44.98	0.43	60° 00′
61° 00′	311.49	7.49	48.12	0.42	329.16	7.02	312.79	7.43	45.43	0.45	61° 00′
62° 00′	319.05	7.56	48.55	0.43	336.23	7.07	320.31	7.52	45.89	0.46	62° 00′
63° 00′	326.70	7.65	49.00	0.45	343.38	7.15	327.90	7.59	46.36	0.47	63° 00′
64° 00′	334.42	7.72	49.47	0.47	350.59	7.21	335.57	7.67	46.85	0.49	64° 00′
65° 00′	342.24	7.82	49.95	0.48	357.87	7.28	343.34	7.77	47.35	0.50	65° 00′
66° 00′	350.14	7.90	50.45	0.50	365.22	7.35	351.18	7.84	47.87	0.52	66° 00′
67° 00′	358.12	7.96	50.96	0.51	372.64	7.42	359.12	7.96	48.40	0.53	67° 00′
68° 00′	366.20	8.08	51.49	0.53	380.14	7.50	367.15	8.03	48.95	0.55	68° 00′
69° 00′	374.37	8.17	52.04	0.55	387.72	7.58	375.28	8.13	49.52	0.57	69° 00′
70° 00′	382.64	8.27	52.60	0.56	395.38	7.66	383.50	8.22	50.10	0.58	70° 00′
71° 00′	391.01	8.37	53.19	0.59	403.13	7.75	391.82	8.32	50.70	0.60	71° 00′
72° 00′	399.49	8.48	53.79	0.60	410.96	7.83	400.26	8.44	51.32	0.62	72° 00′
73° 00′	408.07	8.58	54.41	0.62	418.88	7.92	408.79	8.53	51.95	0.63	73° 00′
74° 00′	416.77	8.70	55.06	0.65	426.89	8.01	417.44	8.65	52.61	0.66	74° 00′
75° 00′	425.58	8.81	55.72	0.66	434.99	8.10	426.21	8.77	53.28	0.67	75° 00′
76° 00′	434.50	8.92	56.41	0.69	443.19	8.20	435.09	8.88	53.98	0.70	76° 00′
77° 00′	443.52	9.02	57.11	0.70	451.49	8.30	444.06	8.97	54.70	0.72	77° 00′
78° 00′	452.72	9.20	58.85	0.74	459.90	8.41	453.22	9.16	55.44	0.74	78° 00′
79° 00′	462.03	9.31	58.61	0.76	468.41	8.51	462.49	9.27	56.21	0.77	79° 00′
80° 00′	471.47	9.44	59.39	0.78	477.03	8.62	471.88	9.39	57.00	0.79	80° 00′
81° 00′	481.04	9.57	60.19	0.80	485.77	8.74	481.42	9.54	57.81	0.81	81° 00′
82° 00′	490.76	9.72	61.03	0.84	494.62	8.85	491.09	9.67	58.65	0.84	82° 00′
83° 00′	500.63	9.87	61.89	0.86	503.59	8.97	500.92	9.83	59.52	0.87	83° 00′
84° 00′	510.65	10.02	62.78	0.89	512.69	9.10	510.90	9.98	60.42	0.90	84° 00′
		10.18		0.92		9.22		10.14		0.92	

TABLE 26—*Continued*

$N=9$	$F=6° 22'$	$K=8' 00''$	$G=4.7083$	$NG=42.3747$	$D=9° 00'$	$R=637.2742$

Referred to Center Lines of both Tracks							Referred to Center Line of Spur and Gage Line of Main				
Δ	x	Diff.	II_1	Diff.	T	Diff.	I_2P	Diff.	I_2I_1	Diff.	Δ
85° 00′	+520.83	10.18	63.70	0.92	521.91	9.22	+521.04	10.14	61.34	0.92	85° 00′
86° 00′	531.17	10.34	64.66	0.96	531.27	9.36	531.34	10.30	62.30	0.96	86° 00′
87° 00′	541.68	10.51	65.64	0.98	540.77	9.50	541.81	10.47	63.28	0.98	87° 00′
88° 00′	552.37	10.61	66.66	1.02	550.40	9.63	552.45	10.64	64.30	1.02	88° 00′
89° 00′	563.24	10.87	67.72	1.06	560.19	9.79	563.28	10.83	65.36	1.06	89° 00′
90° 00′	574.30	11.06	68.81	1.09	570.12	9.93	574.30	11.02	66.45	1.09	90° 00′
92° 00′	597.00	22.70	71.11	2.30	590.47	20.35	596.91	22.61	68.75	2.30	92° 00′
94° 00′	620.53	23.53	73.57	2.46	611.48	21.01	620.37	23.46	71.21	2.46	94° 00′
96° 00′	644.96	24.43	76.22	2.65	633.21	21.73	644.71	24.34	73.85	2.64	96° 00′
98° 00′	670.35	25.39	79.07	2.85	655.71	22.50	670.02	25.31	76.69	2.84	98° 00′
100° 00′	696.79	26.44	82.13	3.06	679.02	23.31	696.37	26.35	79.74	3.05	100° 00′
102° 00′	724.34	27.55	85.43	3.30	703.23	24.21	723.84	27.47	83.02	3.28	102° 00′
104° 00′	753.11	28.77	89.00	3.57	728.38	25.15	752.52	28.68	86.57	3.55	104° 00′
106° 00′	783.19	30.08	92.86	3.86	754.56	26.18	782.51	29.99	90.41	3.84	106° 00′
108° 00′	814.69	31.50	97.03	4.17	781.84	27.28	813.93	31.42	94.56	4.15	108° 00′
110° 00′	847.75	33.06	101.57	4.54	810.32	28.48	846.89	32.96	99.06	4.50	110° 00′
112° 00′	882.49	34.74	106.50	4.93	840.09	29.77	881.54	34.65	103.96	4.90	112° 00′
114° 00′	919.08	36.59	111.87	5.37	871.26	31.17	918.03	36.49	109.30	5.34	114° 00′
116° 00′	957.68	38.60	117.74	5.87	903.95	32.69	956.53	38.50	115.12	5.82	116° 00′
118° 00′	998.50	40.82	124.17	6.43	938.31	34.36	997.35	40.82	121.50	6.38	118° 00′
120° 00′	1041.77	43.27	131.23	7.06	974.48	36.17	1040.41	43.06	128.51	7.01	120° 00′
122° 00′	1087.73	45.96	139.00	7.77	1012.63	38.15	1086.26	45.85	136.22	7.71	122° 00′
124° 00′	1136.68	48.95	147.58	8.58	1052.96	40.33	1135.09	48.83	144.74	8.52	124° 00′
126° 00′	1188.95	52.27	157.09	9.51	1095.68	42.72	1187.24	52.15	154.18	9.44	126° 00′
128° 00′	1244.92	55.97	167.66	10.57	1141.05	45.37	1243.08	55.84	164.67	10.49	128° 00′
130° 00′	1305.05	60.13	179.46	11.80	1189.34	48.29	1303.08	60.00	176.38	11.71	130° 00′

TABLE 26 — *Continued*

$N=9\frac{1}{2}$	$F=6°\ 02'$		$K=8'\ 00''$		$G=4.7083$		$NG=47.7289$		$D=8°\ 00'$		$R=716.7794$
Referred to Center Lines of both Tracks							Referred to Center Line of Spur and Gage Line of Main				
Δ	x	Diff.	II_1	Diff.	T	Diff.	I_2P	Diff.	I_2I_1	Diff.	Δ
6° 02′	−44.73	8.42					−22.46	5.21			6° 02′
7° 00′	−36.59	7.90	50.69	1.58	6.05	6.25	−17.42	5.48	31.37	0.83	7° 00′
8° 00′	−28.69	7.55	49.11	1.21	12.30	6.26	−11.94	5.66	32.20	0.65	8° 00′
9° 00′	−21.14	7.31	47.90	0.96	18.56	6.26	−6.28	5.80	32.85	0.53	9° 00′
10° 00′	−13.83	7.13	46.94	0.77	24.82	6.27	−0.48	5.89	33.38	0.45	10° 00′
11° 00′	−6.70	7.01	46.17	0.63	31.09	6.27	+5.41	5.97	33.83	0.39	11° 00′
12° 00′	+0.31	6.92	45.54	0.52	37.36	6.27	11.38	6.04	34.22	0.34	12° 00′
13° 00′	7.23	6.85	45.02	0.43	43.63	6.28	17.42	6.09	34.56	0.30	13° 00′
14° 00′	14.08	6.79	44.59	0.35	49.91	6.29	23.51	6.14	34.86	0.28	14° 00′
15° 00′	20.87	6.75	44.24	0.30	56.20	6.30	29.65	6.18	35.14	0.26	15° 00′
16° 00′	27.62	6.73	43.94	0.25	62.50	6.31	35.83	6.22	35.40	0.24	16° 00′
17° 00′	34.35	6.71	43.69	0.20	68.81	6.32	42.05	6.25	35.64	0.23	17° 00′
18° 00′	41.06	6.69	43.49	0.17	75.13	6.33	48.30	6.29	35.87	0.22	18° 00′
19° 00′	47.75	6.69	43.32	0.13	81.46	6.34	54.59	6.32	36.09	0.21	19° 00′
20° 00′	54.44	6.68	43.19	0.10	87.80	6.35	60.91	6.34	36.30	0.21	20° 00′
21° 00′	61.12	6.69	43.08	0.08	94.15	6.37	67.25	6.38	36.51	0.21	21° 00′
22° 00′	67.81	6.69	43.00	0.06	100.52	6.39	73.63	6.41	36.72	0.20	22° 00′
23° 00′	74.50	6.69	42.94	0.03	106.91	6.40	80.04	6.44	36.92	0.20	23° 00′
24° 00′	81.19	6.71	42.91	0.02	113.31	6.42	86.48	6.47	37.12	0.20	24° 00′
25° 00′	87.90	6.73	42.89	0.00	119.73	6.44	92.95	6.50	37.32	0.20	25° 00′
26° 00′	94.63	6.74	42.89	0.02	126.17	6.46	99.45	6.54	37.52	0.20	26° 00′
27° 00′	101.37	6.76	42.91	0.04	132.63	6.48	105.99	6.56	37.72	0.21	27° 00′
28° 00′	108.13	6.78	42.95	0.05	139.11	6.50	112.55	6.60	37.93	0.21	28° 00′
29° 00′	114.91	6.79	43.00	0.06	145.61	6.52	119.15	6.63	38.14	0.21	29° 00′
30° 00′	121.70	6.83	43.06	0.08	152.13	6.55	125.78	6.67	38.35	0.22	30° 00′
31° 00′	128.53	6.86	43.14	0.09	158.68	6.58	132.45	6.70	38.57	0.22	31° 00′

TABLE 26 — *Continued*

$N=9\frac{1}{2}$	$F=6°\ 02'$	$K=8'\ 00''$	$G=4.7083$	$NG=44.7289$	$D=8°\ 00'$	$R=716.7794$

Referred to Center Lines of both Tracks							Referred to Center Line of Spur and Gage Line of Main				
Δ	x	Diff.	II_1	Diff.	T	Diff.	I_2P	Diff.	I_2I_1	Diff.	Δ
32° 00′	+135.39	6.86	43.23	0.09	165.26	6.58	+139.15	6.70	38.79	0.22	32° 00′
33° 00′	145.27	6.88	43.34	0.11	171.86	6.60	145.89	6.74	39.02	0.23	33° 00′
34° 00′	149.18	6.91	43.46	0.12	178.49	6.63	152.67	6.78	39.25	0.23	34° 00′
35° 00′	156.12	6.96	43.55	0.13	185.15	6.66	159.49	6.82	39.49	0.24	35° 00′
36° 00′	163.10	6.98	43.73	0.14	191.84	6.69	166.34	6.85	39.73	0.24	36° 00′
37° 00′	170.11	7.01	43.89	0.16	198.56	6.72	173.24	6.90	39.98	0.25	37° 00′
38° 00′	177.16	7.05	44.05	0.16	205.31	6.75	180.18	6.94	40.23	0.25	38° 00′
39° 00′	184.25	7.09	44.23	0.18	212.09	6.78	187.16	6.98	40.49	0.26	39° 00′
40° 00′	191.38	7.13	44.42	0.19	218.91	6.82	194.19	7.03	40.76	0.27	40° 00′
41° 00′	198.55	7.17	44.62	0.20	225.77	6.86	201.26	7.07	41.03	0.27	41° 00′
42° 00′	205.77	7.22	44.83	0.21	232.67	6.90	208.38	7.12	41.31	0.28	42° 00′
43° 00′	213.03	7.26	45.05	0.22	239.60	6.93	215.55	7.17	41.60	0.29	43° 00′
44° 00′	220.34	7.31	45.29	0.24	246.57	6.97	222.78	7.23	41.90	0.30	44° 00′
45° 00′	227.70	7.36	45.53	0.24	253.59	7.02	230.05	7.27	42.20	0.30	45° 00′
46° 00′	235.11	7.41	45.79	0.26	260.65	7.06	237.38	7.33	42.52	0.32	46° 00′
47° 00′	242.57	7.46	46.06	0.27	267.76	7.11	244.76	7.38	42.84	0.32	47° 00′
48° 00′	250.08	7.51	46.34	0.28	274.91	7.15	252.20	7.44	43.17	0.33	48° 00′
49° 00′	257.66	7.58	46.63	0.29	282.11	7.20	259.70	7.50	43.51	0.34	49° 00′
50° 00′	265.29	7.63	46.94	0.31	289.36	7.25	267.26	7.56	43.86	0.35	50° 00′
51° 00′	272.98	7.69	47.25	0.31	296.66	7.30	274.89	7.63	44.22	0.36	51° 00′
52° 00′	280.74	7.76	47.58	0.33	304.01	7.35	282.58	7.69	44.60	0.38	52° 00′
53° 00′	288.56	7.82	47.92	0.34	311.42	7.41	290.33	7.75	44.98	0.38	53° 00′
54° 00′	296.44	7.88	48.28	0.36	318.88	7.46	298.16	7.83	45.37	0.39	54° 00′
55° 00′	304.40	7.96	48.65	0.37	326.40	7.52	306.05	7.89	45.77	0.40	55° 00′
56° 00′	312.43	8.03	49.03	0.38	333.98	7.58	314.02	7.97	46.19	0.42	56° 00′
57° 00′	320.53	8.10	49.42	0.39	341.63	7.65	322.06	8.04	46.62	0.43	57° 00′
58° 00′	328.70	8.17	49.83	0.41	349.34	7.71	330.18	8.12	47.06	0.44	58° 00′
		8.26		0.42		7.77		8.19		0.45	

TABLE 26 — *Continued*

$N=9\frac{1}{2}$	$F=6°\ 02'$		$K=8'\ 00''$		$G=4.7083$		$NG=44.7289$		$D=8°\ 00'$		$R=716.7794$
Referred to Center Lines of both Tracks							Referred to Center Line of Spur and Gage Line of Main				
Δ	x	Diff.	II_1	Diff.	T	Diff.	I_2P	Diff.	I_2I_1	Diff.	Δ
59° 00′	+336.96	8.26	50.25	0.42	357.11	7.77	+338.37	8.19	47.51	0.45	59° 00′
60° 00′	345.29	8.33	50.69	0.44	364.95	7.84	346.65	8.28	47.97	0.46	60° 00′
61° 00′	353.71	8.42	51.14	0.45	372.87	7.92	355.02	8.37	48.45	0.48	61° 00′
62° 00′	362.22	8.51	51.61	0.47	380.85	7.98	363.47	8.45	48.95	0.50	62° 00′
63° 00′	370.81	8.59	52.10	0.49	388.91	8.06	372.01	8.54	49.46	0.51	63° 00′
64° 00′	379.50	8.69	52.60	0.50	397.04	8.13	380.64	8.63	49.98	0.52	64° 00′
65° 00′	388.28	8.78	53.11	0.51	405.26	8.22	389.37	8.73	50.52	0.54	65° 00′
66° 00′	397.15	8.87	53.64	0.53	413.55	8.29	398.20	8.83	51.07	0.55	66° 00′
67° 00′	406.13	8.98	54.20	0.56	421.93	8.38	407.13	8.93	51.64	0.57	67° 00′
68° 00′	415.21	9.08	54.77	0.57	430.40	8.47	416.16	9.03	52.23	0.59	68° 00′
69° 00′	424.39	9.18	55.36	0.59	438.96	8.56	425.30	9.14	52.83	0.60	69° 00′
70° 00′	433.69	9.30	55.96	0.60	447.60	8.64	434.55	9.25	53.46	0.63	70° 00′
71° 00′	443.10	9.41	56.59	0.63	456.34	8.74	443.91	9.36	54.10	0.64	71° 00′
72° 00′	452.63	9.53	57.24	0.65	465.18	8.84	453.39	9.48	54.76	0.66	72° 00′
73° 00′	462.28	9.65	57.91	0.67	474.13	8.95	463.01	9.62	55.44	0.68	73° 00′
74° 00′	472.05	9.77	58.60	0.69	483.17	9.04	472.73	9.72	56.15	0.71	74° 00′
75° 00′	481.95	9.90	59.31	0.71	492.32	9.15	482.58	9.85	56.87	0.72	75° 00′
76° 00′	491.99	10.04	60.05	0.74	501.58	9.26	492.57	9.99	57.62	0.75	76° 00′
77° 00′	502.16	10.17	60.81	0.76	510.96	9.38	502.70	10.13	58.39	0.77	77° 00′
78° 00′	512.47	10.31	61.59	0.78	520.45	9.49	512.97	10.27	59.18	0.79	78° 00′
79° 00′	522.93	10.46	62.40	0.81	530.07	9.62	523.39	10.42	60.00	0.82	79° 00′
80° 00′	533.54	10.61	63.24	0.84	539.81	9.74	533.96	10.57	60.85	0.85	80° 00′
81° 00′	544.31	10.77	64.11	0.87	549.67	9.86	544.68	10.72	61.72	0.87	81° 00′
82° 00′	555.24	10.93	65.00	0.89	559.67	10.00	555.57	10.89	62.62	0.90	82° 00′
83° 00′	566.33	11.09	65.92	0.92	569.81	10.14	566.62	11.05	63.55	0.93	83° 00′
84° 00′	577.60	11.27	66.88	0.96	580.09	10.28	577.84	11.22	64.51	0.96	84° 00′
		11.44		0.99		10.43		11.41		0.99	

Table 26 — *Continued*

$N=9\frac{1}{2}$	$F=6°\ 02'$		$K=8'\ 00''$		$G=4.7083$		$NG=44.7289$		$D=8°\ 00'$		$R=716.7794$
Referred to Center Lines of both Tracks							Referred to Center Line of Spur and Gage Line of Main				
Δ	x	Diff.	II_1	Diff.	T	Diff.	I_2P	Diff.	I_2I_1	Diff.	Δ
85° 00′	+589.04	11.44	67.87	0.99	590.52	10.43	+589.25	11.41	65.50	0.99	85° 00′
86° 00′	600.67	11.63	68.89	1.02	601.09	10.57	600.83	11.58	66.53	1.03	86° 00′
87° 00′	612.49	11.82	69.95	1.06	611.82	10.73	612.61	11.78	67.57	1.06	87° 00′
88° 00′	624.50	12.01	71.04	1.09	622.72	10.90	624.58	11.97	68.68	1.09	88° 00′
89° 00′	636.72	12.22	72.17	1.13	633.78	11.06	636.76	12.18	69.81	1.13	89° 00′
90° 00′	649.15	12.43	73.34	1.17	645.01	11.23	649.15	12.39	70.98	1.17	90° 00′
92° 00′	674.67	25.52	75.80	2.46	668.02	23.01	674.59	25.44	73.45	2.47	92° 00′
94° 00′	701.13	26.46	78.44	2.64	691.78	23.76	700.97	26.38	76.08	2.63	94° 00′
96° 00′	728.00	27.47	81.28	2.84	716.36	24.58	728.35	27.38	78.91	2.83	96° 00′
98° 00′	757.15	28.55	84.33	3.05	741.81	25.45	756.82	28.47	81.96	3.05	98° 00′
100° 00′	786.87	29.72	87.62	3.29	768.20	26.39	786.46	29.64	85.23	3.27	100° 00′
102° 00′	817.85	30.98	91.16	3.54	795.60	27.40	817.35	30.89	88.75	3.52	102° 00′
104° 00′	850.20	32.35	94.98	3.82	824.08	28.48	849.61	32.26	92.55	3.80	104° 00′
106° 00′	884.02	33.82	99.11	4.13	853.72	29.64	883.34	33.73	96.66	4.11	106° 00′
108° 00′	919.44	35.42	103.59	4.48	884.62	30.90	918.68	35.34	101.12	4.46	108° 00′
110° 00′	956.61	37.17	108.45	4.86	916.88	32.26	955.75	37.07	105.95	4.83	110° 00′
112° 00′	995.67	39.06	113.74	5.29	950.62	33.74	994.71	38.96	111.20	5.25	112° 00′
114° 00′	1036.81	41.14	119.50	5.76	985.96	35.34	1035.76	41.05	116.93	5.73	114° 00′
116° 00′	1080.22	43.41	125.80	6.30	1023.03	37.07	1079.07	43.31	123.18	6.25	116° 00′
118° 00′	1126.13	45.91	132.70	6.90	1062.00	38.97	1124.87	45.80	130.03	6.85	118° 00′
120° 00′	1174.78	48.65	140.27	7.57	1103.04	41.04	1173.42	48.55	137.55	7.52	120° 00′
122° 00′	1226.46	51.68	148.61	8.34	1146.34	43.30	1224.98	51.56	145.84	8.29	122° 00′
124° 00′	1281.50	55.04	157.83	9.22	1192.13	45.79	1279.91	54.93	154.99	9.15	124° 00′
126° 00′	1340.27	58.77	168.04	10.21	1240.66	48.53	1338.56	58.65	165.13	10.14	126° 00′
128° 00′	1403.21	62.94	179.37	11.35	1292.22	51.56	1401.37	62.81	176.41	11.28	128° 00′
130° 00′	1470.83	67.62	192.07	12.68	1347.12	54.90	1468.85	67.48	189.00	12.59	130° 00′

TABLE 26 — *Continued*

$N=10$	$F=5° 44'$	$K=8' 00''$	$G=4.7083$	$NG=47.083$	$D=7° 00'$	$R=819.0200$

Referred to Center Lines of both Tracks							Referred to Center Line of Spur and Gage Line of Main				
Δ	x	Diff.	II_1	Diff.	T	Diff.	I_2P	Diff.	I_2I_1	Diff.	Δ
5° 44′	−47.08	9.49	54.46	1.89	1.91	7.14	−23.64	5.59	31.94	1.32	5° 44′
6° 00′	−44.55	9.10	52.57	1.40	9.05	7.15	−22.15	5.87	33.26	0.99	6° 00′
7° 00′	−35.45	8.63	51.17	1.08	16.20	7.15	−16.28	6.21	34.25	0.79	7° 00′
8° 00′	−26.82	8.31	50.09	0.85	23.35	7.16	−10.07	6.42	35.04	0.64	8° 00′
9° 00′	−18.51	8.10	49.24	0.68	30.51	7.16	−3.65	6.59	35.68	0.54	9° 00′
10° 00′	−10.41	7.94	48.56	0.55	37.67	7.16	+2.94	6.70	36.22	0.47	10° 00′
11° 00′	−2.47	7.84	48.01	0.45	44.83	7.18	9.64	6.81	36.69	0.40	11° 00′
12° 00′	+5.37	7.76	47.56	0.37	52.01	7.18	16.45	6.88	37.09	0.36	12° 00′
13° 00′	13.13	7.70	47.19	0.31	59.19	7.19	23.33	6.94	37.45	0.33	13° 00′
14° 00′	20.83	7.66	46.88	0.25	66.38	7.20	30.27	7.00	37.78	0.31	14° 00′
15° 00′	28.49	7.62	46.63	0.21	73.58	7.21	37.27	7.05	38.09	0.28	15° 00′
16° 00′	36.11	7.60	46.42	0.16	80.79	7.22	44.32	7.09	38.37	0.27	16° 00′
17° 00′	43.71	7.59	46.26	0.13	88.01	7.24	51.41	7.13	38.64	0.26	17° 00′
18° 00′	51.30	7.58	46.13	0.10	95.25	7.25	58.54	7.16	38.90	0.24	18° 00′
19° 00′	58.88	7.58	46.03	0.08	102.50	7.27	65.72	7.21	39.14	0.24	19° 00′
20° 00′	66.46	7.58	45.95	0.05	109.77	7.28	72.93	7.24	39.38	0.24	20° 00′
21° 00′	74.04	7.59	45.90	0.02	117.05	7.30	80.17	7.28	39.62	0.23	21° 00′
22° 00′	81.63	7.60	45.88	0.01	124.35	7.32	87.45	7.32	39.85	0.23	22° 00′
23° 00′	89.23	7.61	45.87	0.01	131.67	7.35	94.77	7.35	40.08	0.23	23° 00′
24° 00′	96.84	7.62	45.88	0.03	139.02	7.36	102.12	7.39	40.31	0.23	24° 00′
25° 00′	104.46	7.65	45.91	0.05	146.38	7.39	109.51	7.43	40.54	0.23	25° 00′
26° 00′	112.11	7.67	45.96	0.06	153.77	7.41	116.94	7.46	40.77	0.23	26° 00′
27° 00′	119.78	7.69	46.02	0.08	161.18	7.44	124.40	7.49	41.00	0.24	27° 00′
28° 00′	127.47	7.71	46.10	0.09	168.62	7.46	131.89	7.54	41.24	0.24	28° 00′
29° 00′	135.18	7.75	46.19	0.10	176.08	7.49	139.43	7.57	41.48	0.24	29° 00′
30° 00′	142.93	7.77					147.00	7.62			30° 00′

TABLE 26 — *Continued*

$N=10$	$F=5° 44'$	$K=8' 00''$	$G=4.7083$	$NG=47.083$	$D=7° 00'$	$R=819.0200$

Referred to Center Lines of both Tracks							Referred to Center Line of Spur and Gage Line of Main				
Δ	x	Diff.	II_1	Diff.	T	Diff.	I_2P	Diff.	I_2I_1	Diff.	Δ
31° 00′	+150.70	7.77	46.29	0.10	183.57	7.49	+154.62	7.62	41.72	0.24	31° 00′
32° 00′	158.51	7.81	46.41	0.12	191.09	7.52	162.27	7.65	41.97	0.25	32° 00′
33° 00′	166.35	7.84	46.54	0.13	198.65	7.56	169.97	7.70	42.22	0.25	33° 00′
34° 00′	174.22	7.87	46.68	0.14	206.23	7.58	177.71	7.74	42.47	0.25	34° 00′
35° 00′	182.13	7.91	46.84	0.16	213.85	7.62	185.50	7.79	42.73	0.26	35° 00′
36° 00′	190.09	7.96	47.01	0.17	221.50	7.65	193.33	7.83	43.00	0.27	36° 00′
37° 00′	198.08	7.99	47.19	0.18	229.19	7.69	201.20	7.87	43.28	0.28	37° 00′
38° 00′	206.12	8.04	47.38	0.19	236.91	7.72	209.13	7.93	43.56	0.28	38° 00′
39° 00′	214.20	8.08	47.58	0.20	244.68	7.77	217.11	7.98	43.84	0.28	39° 00′
40° 00′	222.33	8.13	47.80	0.22	252.48	7.80	225.13	8.02	44.14	0.30	40° 00′
41° 00′	230.51	8.18	48.03	0.23	260.33	7.85	233.21	8.08	44.44	0.30	41° 00′
42° 00′	238.74	8.23	48.27	0.24	268.22	7.89	241.35	8.14	44.75	0.31	42° 00′
43° 00′	247.02	8.28	48.52	0.25	276.16	7.94	249.54	8.19	45.07	0.32	43° 00′
44° 00′	255.36	8.34	48.78	0.26	284.14	7.98	257.79	8.25	45.40	0.33	44° 00′
45° 00′	263.75	8.39	49.06	0.28	292.18	8.04	266.10	8.31	45.73	0.33	45° 00′
46° 00′	272.20	8.45	49.35	0.29	300.26	8.08	274.47	8.37	46.08	0.35	46° 00′
47° 00′	280.73	8.53	49.65	0.30	308.39	8.13	282.92	8.45	46.43	0.35	47° 00′
48° 00′	289.29	8.56	49.96	0.31	316.58	8.19	291.41	8.49	46.79	0.36	48° 00′
49° 00′	297.93	8.64	50.29	0.33	324.82	8.24	299.98	8.57	47.17	0.38	49° 00′
50° 00′	306.64	8.71	50.63	0.34	333.12	8.30	308.62	8.64	47.55	0.38	50° 00′
51° 00′	315.42	8.78	50.98	0.35	341.48	8.36	317.33	8.71	47.95	0.40	51° 00′
52° 00′	324.27	8.85	51.34	0.36	349.90	8.42	326.11	8.78	48.35	0.40	52° 00′
53° 00′	333.19	8.92	51.72	0.38	358.39	8.49	334.97	8.86	48.77	0.42	53° 00′
54° 00′	342.19	9.00	52.11	0.39	366.94	8.55	343.91	8.94	49.20	0.43	54° 00′
55° 00′	351.28	9.09	52.52	0.41	375.55	8.61	352.92	9.01	49.64	0.44	55° 00′
56° 00′	360.44	9.16	52.94	0.42	384.24	8.69	362.03	9.11	50.10	0.46	56° 00′
57° 00′	369.68	9.24	53.37	0.43	392.99	8.75	371.21	9.18	50.57	0.47	57° 00′
		9.33		0.45		8.83		9.28		0.48	

TABLE 26 — *Continued*

$N=10$	$F=5° 44'$	$K=8' 00''$	$G=4.7083$	$NG=47.083$	$D=7° 00'$	$R=819.0200$

Referred to Center Lines of both Tracks							Referred to Center Line of Spur and Gage Line of Main				
Δ	x	Diff.	II_1	Diff.	T	Diff.	I_2P	Diff.	I_2I_1	Diff.	Δ
58° 00′	+379.01	9.33	53.82	0.45	401.82	8.83	+380.49	9.28	51.05	0.48	58° 00′
59° 00′	388.44	9.43	54.29	0.47	410.73	8.91	389.85	9.36	51.54	0.49	59° 00′
60° 00′	397.96	9.52	54.77	0.48	419.72	8.99	399.31	9.46	52.05	0.51	60° 00′
61° 00′	407.57	9.61	55.27	0.50	428.78	9.06	408.87	9.56	52.58	0.53	61° 00′
62° 00′	417.28	9.71	55.78	0.51	437.93	9.15	418.53	9.66	53.11	0.53	62° 00′
63° 00′	427.09	9.81	56.31	0.53	447.16	9.23	428.29	9.76	53.67	0.56	63° 00′
64° 00′	437.00	9.91	56.86	0.55	456.49	9.33	438.15	9.86	54.24	0.57	64° 00′
65° 00′	447.02	10.02	57.43	0.57	465.90	9.41	448.12	9.97	54.83	0.59	65° 00′
66° 00′	457.16	10.14	58.01	0.58	475.41	9.51	458.21	10.09	55.43	0.60	66° 00′
67° 00′	467.41	10.25	58.61	0.60	485.01	9.60	468.41	10.20	56.06	0.63	67° 00′
68° 00′	477.77	10.36	59.24	0.63	494.71	9.70	478.72	10.31	56.70	0.64	68° 00′
69° 00′	488.26	10.49	59.88	0.64	504.52	9.81	489.17	10.45	57.36	0.66	69° 00′
70° 00′	498.88	10.62	60.55	0.67	514.43	9.91	499.73	10.56	58.04	0.68	70° 00′
71° 00′	509.62	10.74	61.23	0.68	524.45	10.02	510.43	10.70	58.74	0.70	71° 00′
72° 00′	520.50	10.88	61.94	0.71	534.59	10.14	521.27	10.84	59.46	0.72	72° 00′
73° 00′	531.52	11.02	62.67	0.73	544.84	10.25	532.24	10.97	60.21	0.75	73° 00′
74° 00′	542.68	11.16	63.42	0.75	555.21	10.37	543.35	11.11	60.98	0.77	74° 00′
75° 00′	553.99	11.31	64.20	0.78	565.71	10.50	554.62	11.27	61.77	0.79	75° 00′
76° 00′	565.44	11.45	65.01	0.81	576.33	10.62	566.03	11.41	62.58	0.81	76° 00′
77° 00′	577.06	11.62	65.84	0.83	587.08	10.75	577.60	11.57	63.42	0.84	77° 00′
78° 00′	588.84	11.78	66.70	0.86	597.97	10.89	589.34	11.74	64.29	0.87	78° 00′
79° 00′	600.78	11.94	67.58	0.88	609.00	11.03	601.24	11.90	65.18	0.89	79° 00′
80° 00′	612.90	12.12	68.50	0.92	620.17	11.17	613.31	12.07	66.11	0.93	80° 00′
81° 00′	625.19	12.29	69.44	0.94	631.49	11.32	625.57	12.26	67.06	0.95	81° 00′
82° 00′	637.67	12.48	70.42	0.98	642.96	11.47	638.00	12.43	68.04	0.98	82° 00′
83° 00′	650.34	12.67	71.43	1.01	654.60	11.64	650.63	12.63	69.06	1.02	83° 00′
		12.87		1.05		11.79		12.82		1.05	

TABLE 26 — *Continued*

$N=10$	$F=5° 44'$		$K=8' 00''$		$G=4.7083$		$NG=47.083$		$D=7° 00'$		$R=819.0200$
Referred to Center Lines of both Tracks							Referred to Center Line of Spur and Gage Line of Main				
Δ	x	Diff.	II_1	Diff.	T	Diff.	I_2P	Diff.	I_2I_1	Diff.	Δ
84° 00′	+663.21	12.87	72.48	1.05	666.39	11.79	+663.45	12.82	70.11	1.05	84° 00′
85° 00′	676.28	13.07	73.55	1.07	678.36	11.97	676.48	13.03	71.19	1.08	85° 00′
86° 00′	689.56	13.28	74.66	1.11	690.49	12.13	689.72	13.24	72.30	1.11	86° 00′
87° 00′	703.05	13.49	75.82	1.16	702.81	12.32	703.18	13.46	73.46	1.16	87° 00′
88° 00′	716.78	13.73	77.01	1.19	715.32	12.51	716.86	13.68	74.65	1.19	88° 00′
89° 00′	730.73	13.95	78.24	1.23	728.01	12.69	730.77	13.91	75.89	1.24	89° 00′
90° 00′	744.93	14.20	79.52	1.28	740.91	12.90	744.93	14.16	77.16	1.27	90° 00′
92° 00′	774.07	29.14	82.21	2.69	767.32	26.41	773.99	29.06	79.85	2.69	92° 00′
94° 00′	804.30	30.23	85.09	2.88	794.61	27.29	804.13	30.14	82.73	2.88	94° 00′
96° 00′	835.67	31.37	88.19	3.10	822.84	28.23	835.42	31.29	85.82	3.09	96° 00′
98° 00′	868.28	32.61	91.51	3.32	852.08	29.24	867.95	32.53	89.14	3.32	98° 00′
100° 00′	902.23	33.95	95.10	3.59	882.41	30.33	904.82	33.87	92.71	3.57	100° 00′
102° 00′	937.61	35.38	98.96	3.86	913.88	31.47	937.11	35.29	96.55	3.84	102° 00′
104° 00′	974.55	36.94	103.13	4.17	946.62	32.74	973.96	36.85	100.70	4.15	104° 00′
106° 00′	1013.19	38.64	107.64	4.51	980.70	34.08	1012.51	38.55	105.19	4.49	106° 00′
108° 00′	1053.65	40.46	112.53	4.89	1016.23	35.53	1052.88	40.37	110.05	4.86	108° 00′
110° 00′	1096.10	42.45	117.84	5.31	1053.34	37.11	1095.24	42.36	115.33	5.28	110° 00′
112° 00′	1140.72	44.62	123.61	5.77	1092.16	38.82	1139.77	44.53	121.07	5.74	112° 00′
114° 00′	1187.71	46.99	129.90	6.29	1132.82	40.66	1186.66	46.89	127.32	6.25	114° 00′
116° 00′	1237.30	49.59	136.78	6.88	1175.50	42.68	1236.15	49.49	134.16	6.84	116° 00′
118° 00′	1289.73	52.43	144.31	7.53	1220.36	44.86	1288.48	52.33	141.64	7.48	118° 00′
120° 00′	1345.30	55.57	152.58	8.27	1267.63	47.27	1343.94	55.46	149.86	8.22	120° 00′
122° 00′	1404.34	59.04	161.69	9.11	1317.52	49.89	1402.86	58.92	158.91	9.05	122° 00′
124° 00′	1467.21	62.87	171.76	10.07	1370.29	52.77	1465.62	62.76	168.92	10.01	124° 00′
126° 00′	1534.35	67.14	182.92	11.16	1426.24	55.95	1532.64	67.02	180.01	11.09	126° 00′
128° 00′	1606.25	71.90	195.33	12.41	1485.70	59.46	1604.41	71.71	192.34	12.33	128° 00′
130° 00′	1683.48	77.23	209.19	13.86	1549.04	63.34	1681.50	77.09	206.12	13.78	130° 00′

TABLE 27

TABLE OF SWITCH TIES

Track Ties 6″ × 8″ × 8′ 00″

Turnout No.	4	5	6	7	8	9	9½	10	12	15
Dimension	Number of Ties Required									
7″ × 12″ 15′ 00″	1	1	1	1	1	1	1	1	1	1
7″ × 9″ 15′ 00″	1	1	1	1	1	1	1	1	1	1
7″ × 9″ 8′ 6″	4	5	6	7	9	9	10	10	2	17
7″ × 9″ 9′ 00″	4	4	4	5	6	6	6	6	17	10
7″ × 9″ 9′ 6″	2	3	3	4	6	6	6	6	7	9
7″ × 9″ 10′ 00″	2	2	2	3	3	3	4	4	5	6
7″ × 9″ 10′ 6″	1	2	2	3	3	3	4	4	4	7
7″ × 9″ 11′ 00″	1	2	2	2	2	3	3	3	4	4
7″ × 9″ 11′ 6″	1	1	2	2	2	3	3	3	4	4
7″ × 9″ 12′ 00″	2	1	2	2	2	3	3	3	3	4
7″ × 9″ 12′ 6″	1	2	0	1	0	2	0	2	2	2
7″ × 10″ 12′ 6″	0	0	2	1	3	0	3	0	2	3
7″ × 10″ 13′ 00″	1	1	1	2	2	3	3	2	3	4
7″ × 10″ 13′ 6″	1	1	2	2	2	3	3	3	4	4
7″ × 10″ 14′ 00″	2	2	2	2	0	1	0	2	0	1
7″ × 9″ 14′ 00″	0	0	0	0	3	2	3	0	3	3
7″ × 9″ 14′ 6″	1	1	1	2	2	3	2	3	3	4
7″ × 9″ 15′ 00″	1	1	2	2	2	2	3	3	3	4
7″ × 9″ 15′ 6″	1	2	1	2	2	2	2	3	3	5
7″ × 9″ 16′ 00″	1	2	2	1	2	3	2	3	3	4
Total Number of Pieces	28	34	38	45	53	59	61	62	74	97
Feet Board Measure.....	1759	2135	2393	2784	3243	3659	3811	3830	4545	5921
Weight, Live White Oak, Tons of 2000 Lbs.	4.35	5.27	5.91	6.88	8.01	9.04	9.42	9.46	11.23	14.62

TABLE 28

TABLE OF SWITCH TIES

Track Ties 7″ × 9″ × 8′ 6″

nout No.	4	5	6	7	8	9	9½	10	12	15
mension	Number of Ties Required									
2″ 15′ 00″	1	1	1	1	1	1	1	1	1	1
9″ 15′ 00″	1	1	1	1	1	1	1	1	1	1
9″ 9′ 00″	4	5	6	7	9	9	10	10	12	17
9″ 9′ 6″	4	4	4	5	6	6	6	6	7	10
9″ 10′ 00″	2	3	3	4	6	6	6	6	7	9
9″ 10′ 6″	2	2	2	3	3	3	4	4	5	6
9″ 11′ 00″	1	2	2	3	3	3	4	4	4	7
9″ 11′ 6″	1	2	2	2	2	3	3	3	4	4
9″ 12′ 00″	1	1	2	2	2	3	3	3	4	4
9″ 12′ 6″	2	1	2	2	2	3	3	3	3	4
9″ 13′ 00″	1	2	0	1	0	2	0	2	2	2
0″ 13′ 00″	0	0	2	1	3	0	3	0	2	3
0″ 13′ 6″	1	1	1	2	2	3	3	2	3	4
0″ 14′ 00″	1	1	2	2	2	3	3	3	4	4
0″ 14′ 6″	2	2	2	2	0	1	0	2	0	1
9″ 14′ 6″	0	0	0	0	3	2	3	0	3	3
9″ 15′ 00″	1	1	1	2	2	3	2	3	3	4
9″ 15′ 6″	1	1	2	2	2	2	3	3	3	4
9″ 16′ 00″	1	2	1	2	2	2	2	3	3	5
9″ 16′ 6″	1	2	2	2	2	3	2	3	3	4
9″ 17′ 00″	1	1	1	1	2	2	2	3	3	4
Number Pieces . . .	29	35	39	47	55	61	63	65	77	101
Board asure . . .	1918	2309	2579	3075	3557	3989	4147	4257	5004	6531
nt, Live ite Oak, s of 2000	4.74	5.70	6.37	7.60	8.79	9.86	10.25	10.54	12.36	16.14

TABLE 29

TABLE OF SWITCH TIES

Track Ties 7″ × 9″ × 9′ 00″

Turnout No	4	5	6	7	8	9	9½	10	12	15
Dimension	Number of Ties Required									
7″×12″ 15′ 00″	1	1	1	1	1	1	1	1	1	1
7″× 9″ 15′ 00″	1	1	1	1	1	1	1	1	1	1
7″× 9″ 9′ 6″	4	5	6	7	9	9	10	10	12	17
7″× 9″ 10′ 00″	4	4	4	5	6	6	6	6	7	10
7″× 9″ 10′ 6″	2	3	3	4	6	6	6	6	7	9
7″× 9″ 11′ 00″	2	2	2	3	3	3	4	4	5	6
7″× 9″ 11′ 6″	1	2	2	3	3	3	4	4	4	7
7″× 9″ 12′ 00″	1	2	2	2	2	3	3	3	4	4
7″× 9″ 12′ 6″	1	1	2	2	2	3	3	3	4	4
7″× 9″ 13′ 00″	2	1	2	2	2	3	3	3	3	4
7″× 9″ 13′ 6″	1	2	0	1	0	2	6	2	2	2
7″×10″ 13′ 6″	0	0	2	1	3	0	3	0	2	3
7″×10″ 14′ 00″	1	1	1	2	2	3	3	2	3	4
7″×10″ 14′ 6″	1	1	2	2	2	3	3	3	4	4
7″×10″ 15′ 00″	2	2	2	2	0	1	0	2	0	1
7″× 9″ 15′ 00″	0	0	0	0	3	2	3	0	3	3
7″× 9″ 15′ 6″	1	1	1	2	2	3	2	3	3	4
7″× 9″ 16′ 00″	1	1	2	2	2	2	3	3	3	4
7″× 9″ 16′ 6″	1	2	1	2	2	2	2	3	3	5
7″× 9″ 17′ 00″	1	2	2	2	2	3	2	3	3	4
7″× 9″ 17′ 6″	1	1	1	1	2	2	2	3	3	4
7″× 9″ 18′ 00″	1	1	1	2	2	2	2	3	3	4
Total Number of Pieces . . .	30	36	40	49	57	63	65	68	80	105
Feet Board Measure	2084	2491	2773	3384	3887	4335	4499	4708	5487	7163
Weight, Live White Oak, Tons of 2000 Lbs.	5.15	6.15	6.85	8.36	9.60	10.78	11.12	11.63	13.56	17.70

TABLE 30

TABLE OF CROSSOVER TIES

Track Ties 7″ × 9″ × 8′ 6″

Crossover No.		6–6			7–7			8–8		
P = c to c of Tracks		12	13	14	12	13	14	12	13	14
Dimension		Number of Ties Required								
7″ × 12″	15′ 00″	2	2	2	2	2	2	2	2	2
7″ × 9″	15′ 00″	2	2	2	2	2	2	2	2	2
7″ × 9″	9′ 00″	12	12	12	14	14	14	18	18	18
7″ × 9″	9′ 6″	8	8	8	10	10	10	12	12	12
7″ × 9″	10′ 00″	6	6	6	8	8	8	12	12	12
7″ × 9″	10′ 6″	4	4	4	6	6	6	6	6	6
7″ × 9″	11′ 00″	4	4	4	6	6	6	6	6	6
7″ × 9″	11′ 6″	4	4	4	4	4	4	4	4	4
7″ × 9″	12′ 00″	4	4	4	4	4	4	4	4	4
7″ × 9″	12′ 6″	0	4	4	0	4	4	0	4	4
7″ × 9″	13′ 00″	0	0	0	0	2	2	0	0	0
7″ × 10″	13′ 00″	0	2	4	0	2	2	0	6	6
7″ × 10″	13′ 6″	0	0	2	0	0	4	0	0	4
7″ × 10″	14′ 00″	0	0	4	0	0	4	0	0	2
7″ × 9″	20′ 6″	2	0	0	6	0	0	8	0	0
7″ × 10″	20′ 6″	15	0	0	15	0	0	14	0	0
7″ × 9″	21′ 6″	0	3	0	0	5	0	0	6	0
7″ × 10″	21′ 6″	0	12	0	0	12	0	0	10	0
7″ × 9″	22′ 6″	0	0	7	0	0	9	0	0	10
7″ × 10″	22′ 6″	0	0	4	0	0	4	0	0	2
Total Number of Pieces . . .		63	67	71	77	81	85	88	92	94
Feet Board Measure		4605	4854	4961	5558	5738	5898	6151	6265	6256
Weight, Live White Oak, Tons of 2000 Lbs.		11.38	11.99	12.26	13.73	14.18	14.57	15.20	15.48	15.45

TABLE 30 — *Continued*

TABLE OF CROSSOVER TIES

Track Ties 7″ × 9″ × 8′ 6″

Crossover No.		9–9			9½–9½			10–10		
P = c to c of Tracks		12	13	14	12	13	14	12	13	14
Dimension		Number of Ties Required								
7″ × 12″	15′ 00″	2	2	2	2	2	2	2	2	2
7″ × 9″	15′ 00″	2	2	2	2	2	2	2	2	2
7″ × 9″	9′ 00″	18	18	18	20	20	20	20	20	20
7″ × 9″	9′ 6″	12	12	12	12	12	12	12	12	12
7″ × 9″	10′ 00″	12	12	12	12	12	12	12	12	12
7″ × 9″	10′ 6″	6	6	6	8	8	8	8	8	8
7″ × 9″	11′ 00″	6	6	6	8	8	8	8	8	8
7″ × 9″	11′ 6″	6	6	6	6	6	6	6	6	6
7″ × 9″	12′ 00″	6	6	6	6	6	6	6	6	6
7″ × 9″	12′ 6″	0	6	6	0	6	6	0	6	6
7″ × 9″	13′ 00″	0	4	4	0	0	0	0	4	4
7″ × 10″	13′ 00″	0	0	6	0	6	6	0	0	0
7″ × 10″	13′ 6″	0	0	0	0	0	6	0	0	4
7″ × 10″	14′ 00″	0	0	0	0	0	0	0	0	0
7″ × 9″	20′ 6″	14	0	0	14	0	0	18	0	0
7″ × 10″	20′ 6″	14	0	0	14	0	0	14	0	0
7″ × 9″	21′ 6″	0	8	0	0	9	0	0	12	0
7″ × 10″	21′ 6″	0	14	0	0	14	0	0	14	0
7″ × 9″	22′ 6″	0	0	13	0	0	14	0	0	15
7″ × 10″	22′ 6″	0	0	8	0	0	6	0	0	10
Total Number of Pieces		98	102	107	104	111	114	108	112	115
Feet Board Measure		7089	7241	7639	7365	7926	8068	7795	7960	8249
Weight, Live White Oak, Tons of 2000 Lbs.		17.52	17.89	18.87	18.20	19.58	19.93	19.26	19.71	20.38

TABLE 30 — *Continued*

TABLE OF CROSSOVER TIES

Track Ties 7″ × 9″ × 8′ 6″

Crossover No.	12-12			8-9½			8-10		
P = c to c of Tracks	12	13	14	12	13	14	12	13	14
Dimension	Number of Ties Required								
7″ × 12″ 15′ 00″	2	2	2	2	2	2	2	2	2
7″ × 9″ 15′ 00″	2	2	2	2	2	2	2	2	2
7″ × 9″ 9′ 00″	24	24	24	19	19	19	19	19	19
7″ × 9″ 9′ 6″	14	14	14	12	12	12	12	12	12
7″ × 9″ 10′ 00″	14	14	14	12	12	12	12	12	12
7″ × 9″ 10′ 6″	10	10	10	7	7	7	7	7	7
7″ × 9″ 11′ 00″	8	8	8	7	7	7	7	7	7
7″ × 9″ 11′ 6″	8	8	8	5	5	5	5	5	5
7″ × 9″ 12′ 00″	8	8	8	5	5	5	5	5	5
7″ × 9″ 12′ 6″	0	6	6	0	5	5	0	5	5
7″ × 9″ 13′ 00″	0	4	4	0	0	0	0	2	2
7″ × 10″ 13′ 00″	0	2	4	0	6	6	0	3	3
7″ × 10″ 13′ 6″	0	0	6	0	0	5	0	0	4
7″ × 10″ 14′ 00″	0	0	6	0	0	1	0	0	1
7″ × 9″ 20′ 6″	15	0	0	9	0	0	13	0	0
7″ × 10″ 20′ 6″	20	0	0	16	0	0	14	0	0
7″ × 9″ 21′ 6″	0	12	0	0	7	0	0	9	0
7″ × 10″ 21′ 6″	0	18	0	0	12	0	0	12	0
7″ × 9″ 22′ 6″	0	0	19	0	0	12	0	0	12
7″ × 10″ 22′ 6″	0	0	2	0	0	4	0	0	6
Total Number of Pieces . . .	125	132	137	96	101	104	98	102	104
Feet Board Measure. . . .	8940	9464	9374	6782	6978	7141	6973	7113	7094
Weight, Live White Oak, Tons of 2000 Lbs.	22.09	23.38	23.16	16.76	17.24	17.64	17.23	17.57	17.53

TABLE 31

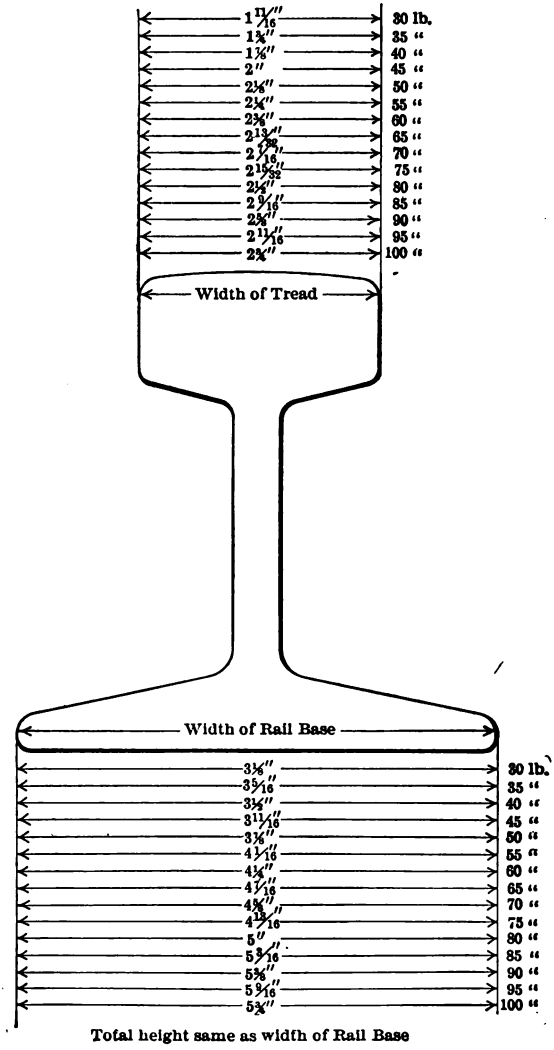

Total height same as width of Rail Base

Fig. 67.

From "Track," Railway Supply Co., Chicago.

TABLE 32

Wt. One Yd.	One Ton Lays	Lgth. Rail	Wt. of 1 Rail	Material per Mile of Track							Material per 100 Linear Feet of Track							Lgth. of Ang. Bars	Wt. in Lbs. of 1 Pair Ang. Bars	Track Bolts	
				Rail	Ties	Spk.	Angle Bars		Track Bolts		Rail	Ties	Spk.	Angle Bars		Track Bolts				Size	No. in Keg
Lbs.	Lin. Ft.	Ft.	Tons	Tons	No.	Kgs.	No. Prs.	Tons	No.	Kgs.	Tons	No.	Kgs.	No. Prs.	Tons	No.	Kgs.				
110	30.5	30	0.491	172.86	3168	33.8	358	15.90	2148	21.1	3.274	60.0	0.64	6.780	0.301	40.68	0.399	34″	99.5	1″×4¾″	102
110	30.5	33	0.540	172.86	3200	34.1	328	14.57	1968	19.3	3.274	60.6	0.65	6.215	0.276	37.29	0.366	34″	99.5	1″×4¾″	102
100	33.6	30	0.446	157.14	3168	33.8	358	13.90	2148	14.5	2.976	60.0	0.64	6.780	0.263	40.68	0.275	34″	87.0	⅞″×4½″	148
100	33.6	33	0.491	157.14	3200	34.1	328	12.74	1968	13.2	2.976	60.6	0.65	6.215	0.241	37.29	0.252	34″	87.0	⅞″×4½″	148
90	37.3	30	0.402	141.43	3168	33.8	358	11.83	2148	14.0	2.678	60.0	0.64	6.780	0.224	40.68	0.266	34″	74.0	⅞″×4¼″	153
90	37.3	33	0.442	141.43	3200	34.1	328	10.83	1968	12.8	2.678	60.6	0.65	6.215	0.205	37.29	0.244	34″	74.0	⅞″×4¼″	153
85	39.5	30	0.379	133.57	3168	33.8	358	10.88	2148	14.0	2.530	60.0	0.64	6.780	0.206	40.68	0.266	34″	68.1	⅞″×4¼″	153
85	39.5	33	0.417	133.57	3200	34.1	328	9.93	1968	12.8	2.530	60.6	0.65	6.215	0.144	37.29	0.244	34″	68.1	⅞″×4¼″	153
80	42.0	30	0.357	125.71	3168	33.8	358	10.08	2148	14.0	2.381	60.0	0.64	6.780	0.191	40.68	0.266	34″	63.1	⅞″×4¼″	153
80	42.0	33	0.393	125.71	3200	34.1	328	9.24	1968	12.8	2.381	60.6	0.65	6.215	0.180	37.29	0.244	34″	63.1	⅞″×4¼″	153
75	44.8	30	0.335	117.86	3168	33.8	358	9.35	2148	9.6	2.232	60.0	0.64	6.780	0.177	40.68	0.181	34″	58.5	¾″×4½″	225
75	44.8	33	0.368	117.86	3200	34.1	328	8.57	1968	8.7	2.232	60.6	0.65	6.215	0.162	37.29	0.166	34″	58.5	¾″×4½″	225
72	41.7	30	0.321	113.14	3168	33.8	358	8.63	2148	9.6	2.143	60.0	0.64	6.780	0.163	40.68	0.181	34″	54.0	¾″×4½″	225
70	48.0	30	0.312	110.00	3168	33.8	358	8.73	2148	9.6	2.083	60.0	0.64	6.780	0.165	40.68	0.181	34″	54.6	¾″×4½″	225
67	50.2	30	0.299	105.29	3168	33.8	358	6.04	1432	6.4	1.994	60.0	0.64	6.780	0.114	27.12	0.121	24″	37.8	¾″×4½″	225
66	50.9	30	0.295	103.71	3168	33.8	358	5.43	1432	6.4	1.964	60.0	0.64	6.780	0.103	27.12	0.121	24″	34.0	¾″×4½″	225
65	51.7	30	0.290	102.14	3168	33.8	358	5.69	1432	6.4	1.933	60.0	0.64	6.780	0.108	27.12	0.121	24″	35.6	¾″×4½″	225
61½	54.6	30	0.275	96.64	3168	33.8	358	5.18	1432	6.4	1.830	60.0	0.64	6.780	0.101	27.12	0.121	24″	32.4	¾″×4½″	225
60	56.0	30	0.268	94.29	3168	33.8	358	5.18	1432	5.8	1.786	60.0	0.64	6.780	0.101	27.12	0.110	24″	32.4	¾″×3½″	247
58¼	57.7	30	0.260	91.54	3168	33.8	358	5.43	1432	5.8	1.734	60.0	0.64	6.780	0.103	27.12	0.110	24″	34.0	¾″×3½″	247
56	60.0	30	0.250	88.00	3168	33.8	358	5.43	1432	5.8	1.667	60.0	0.64	6.780	0.103	27.12	0.110	24″	34.0	¾″×3½″	247
54	62.2	30	0.241	84.86	3168	33.8	358	4.62	1432	5.8	1.607	60.0	0.64	6.780	0.087	27.12	0.110	24″	28.9	¾″×3½″	247
52	64.6	30	0.232	81.71	3168	33.8	358	4.35	1432	5.8	1.548	60.0	0.64	6.780	0.082	27.12	0.110	24″	27.2	¾″×3½″	247
50	67.2	30	0.223	78.57	3168	33.8	358	4.08	1432	5.8	1.488	60.0	0.64	6.780	0.077	27.12	0.110	24″	25.5	¾″×3½″	247

NOTE. — Data for angle bars and track bolts computed on basis of using 10% of 24′, 26′ and 28′ rails with 30′ rails, and 10% of 24′, 26′, 28′ and 30′ rails with 33′ rails. The data computed on basis of using 18 ties per 30′ rails and 20 ties per 33′ rails. Spikes 375 to keg of 200 pounds. One ton = 2240 pounds. For other information regarding angle bars and track bolts see last four columns of table.

TABLE 33

BALLAST TABLE — SINGLE TRACK — SECTION "A"

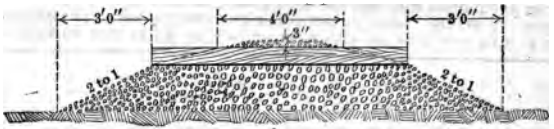

Spacing of Ties	Size of Tie	Depth in Inches of Ballast under the Tie																	
		4"		5"		6"		7"		8"		9"		10"		11"		12"	
		Cu. Yds.		Cu. Yds.		Cu. Yds.		Cu. Yds.		Cu. Yds.		Cu. Yds.		Cu. Yds.		Cu. Yds.		Cu. Yds.	
		Per Mile	Per 100 Ft.	Per Mile	Per 100 Ft.	Per Mile	Per 100 Ft.	Per Mile	Per 100 Ft.	Per Mile	Per 100 Ft.	Per Mile	Per 100 Ft.	Per Mile	Per 100 Ft.	Per Mile	Per 100 Ft.	Per Mile	Per 100 Ft.
15 Ties per 30-Ft. Rail	6"×6"×8' 0"	1152	21.81	1306	24.73	1467	27.78	1632	30.91	1803	34.11	1980	37.50	2162	40.95	2349	44.47	2542	48.14
	6"×6"×8' 6"	1196	22.66	1359	25.74	1528	28.91	1702	32.23	1881	35.62	2066	39.12	2256	42.72	2451	46.43	2452	50.23
	6"×8"×8' 0"	1103	20.88	1257	23.81	1418	26.85	1583	29.98	1754	33.22	1931	36.57	2113	40.02	2300	43.56	2693	47.21
	6"×8"×8' 6"	1146	21.13	1309	24.78	1477	27.97	1651	31.26	1830	34.66	2015	38.15	2205	41.76	2400	45.46	2601	49.26
	7"×9"×8' 6"	1193	22.60	1356	25.69	1525	28.88	1699	32.17	1878	35.57	2063	39.08	2253	42.67	2448	46.37	2749	50.11
	7"×9"×9' 0"	1239	23.46	1411	26.65	1587	30.05	1769	33.48	1957	37.06	2148	40.69	2348	44.46	2551	48.31	2660	52.28
16 Ties per 30-Ft. Rail	6"×6"×8' 0"	1142	21.63	1296	24.55	1457	27.59	1622	30.72	1793	33.96	1970	37.31	2152	40.76	2339	44.30	2532	47.77
	6"×6"×8' 6"	1186	22.47	1349	25.57	1518	28.74	1691	32.03	1871	35.43	2055	38.99	2246	42.53	2441	46.23	2642	50.04
	6"×8"×8' 0"	1090	20.64	1244	23.56	1405	26.59	1570	29.73	1741	32.97	1918	36.33	2100	39.77	2287	43.31	2480	46.97
	6"×8"×8' 6"	1132	21.44	1295	24.53	1463	27.71	1637	31.01	1816	34.40	2001	37.89	2191	41.49	2387	45.20	2588	49.01
	7"×9"×8' 6"	1176	22.27	1339	25.35	1507	28.54	1681	31.83	1860	35.23	2045	38.73	2244	42.49	2430	46.03	2631	49.83
	7"×9"×9' 0"	1220	23.11	1392	26.37	1568	29.70	1750	33.16	1938	36.71	2130	40.33	2329	44.11	2533	47.97	2742	51.93
17 Ties per 30-Ft. Rail	6"×6"×8' 0"	1132	21.42	1287	24.37	1447	27.40	1613	30.55	1784	33.79	1960	37.12	2142	40.57	2330	44.13	2523	47.78
	6"×6"×8' 6"	1176	22.27	1339	25.39	1507	28.55	1681	31.84	1861	35.23	2054	38.80	2235	42.33	2431	46.04	2632	49.84
	6"×8"×8' 0"	1077	20.39	1231	23.31	1392	26.37	1557	29.49	1728	32.54	1905	36.08	2097	39 72	2274	43.07	2467	46.73
	6"×8"×8' 6"	1118	21.18	1281	24.27	1450	27.46	1624	30.75	1803	34.14	1995	37.79	2178	41 24	2373	44.95	2574	48.75
	7"×9"×8' 6"	1158	21.93	1321	25.01	1489	28.21	1663	31.49	1842	34.89	2027	38.39	2217	41.99	2413	45.69	2614	49.50
	7"×9"×9' 0"	1202	22.76	1374	26.02	1550	29.36	1732	32.80	1920	36.36	2111	39.98	2311	43.76	2514	47.61	2723	51.58

TABLE 35 — *Continued*

BALLAST TABLE — SINGLE TRACK — SECTION "A"

Spacing of Ties	Size of Tie	Depth in Inches of Ballast under the Tie																	
		4″		5″		6″		7″		8″		9″		10″		11″		12″	
		Cu. Yds.		Cu. Yds.		Cu. Yds.		Cu. Yds.		Cu. Yds.		Cu. Yds.		Cu. Yds.		Cu. Yds.		Cu. Yds.	
		Per Mile	Per 100 Ft.	Per Mile	Per 100 Ft.	Per Mile	Per 100 Ft.	Per Mile	Per 100 Ft.	Per Mile	Per 100 Ft.	Per Mile	Per 100 Ft.	Per Mile	Per 100 Ft.	Per Mile	Per 100 Ft.	Per Mile	Per 100 Ft.
18 Ties per 30-Ft. Rail	6″×6″×8′ 0″	1122	21.25	1277	24.19	1437	27.22	1603	30.36	1774	33.58	1951	36.95	2133	40.39	2320	43.94	2513	47.59
	6″×6″×8′ 6″	1166	22.08	1329	25.17	1497	28.36	1671	31.65	1850	35.04	2035	38.55	2225	42.14	2420	45.83	2622	49.65
	6″×8″×8′ 0″	1064	20.14	1218	23.07	1379	26.12	1544	29.22	1715	32.48	1892	35.83	2074	39.28	2261	42.82	2454	46.48
	6″×8″×8′ 6″	1105	20.92	1268	24.01	1436	27.20	1610	30.49	1789	33.88	1974	37.38	2164	40.99	2360	44.69	2561	48.49
	7″×9″×8′ 6″	1140	21.59	1303	24.69	1471	27.87	1645	31.16	1824	34.55	1999	37.86	2198	41.63	2395	45.55	2596	49.16
	7″×9″×9′ 0″	1183	22.41	1355	25.67	1531	29.00	1713	32.45	1901	36.00	2093	39.63	2292	43.56	2495	47.26	2705	51.22
18 Ties per 33-Ft. Rail	6″×6″×8′ 0″	1138	21.56	1293	24.49	1453	27.51	1619	30.66	1790	33.90	1977	37.44	2149	40.70	2336	44.24	2529	47.89
	6″×6″×8′ 6″	1183	22.39	1346	25.48	1514	28.67	1691	32.02	1867	35.36	2052	38.86	2242	42.27	2437	46.16	2638	49.97
	6″×8″×8′ 0″	1085	20.55	1240	23.48	1400	26.52	1566	29.66	1737	32.84	1913	36.23	2095	39.68	2283	43.24	2476	46.89
	6″×8″×8′ 6″	1127	21.34	1290	24.43	1458	27.62	1632	30.93	1811	34.32	1996	37.79	2186	41.41	2382	45.09	2583	48.91
	7″×9″×8′ 6″	1169	22.14	1332	25.23	1500	28.42	1674	31.61	1854	35.11	2038	38.60	2228	42.21	2424	44.01	2625	49.71
	7″×9″×9′ 0″	1214	22.98	1386	26.24	1562	29.58	1744	33.02	1931	36.58	2123	40.21	2322	43.98	2526	47.83	2735	51.80
19 Ties per 33-Ft. Rail	6″×6″×8′ 0″	1129	21.39	1284	24.32	1444	27.35	1610	30.49	1781	33.73	1958	37.08	2140	40.53	2327	44.07	2520	47.73
	6″×6″×8′ 6″	1173	22.21	1336	25.31	1505	28.49	1688	31.98	1858	35.18	2042	38.68	2233	42.28	2428	45.98	2629	49.79
	6″×8″×8′ 0″	1073	20.34	1228	23.26	1388	26.30	1554	29.43	1725	32.67	1901	36.00	2083	39.45	2271	43.01	2464	46.66
	6″×8″×8′ 6″	1114	21.11	1278	24.19	1446	27.38	1620	30.68	1799	34.07	1984	37.57	2174	41.17	2369	44.88	2570	48.68
	7″×9″×8′ 6″	1153	21.83	1316	24.92	1484	28.11	1658	31.41	1837	34.79	2022	38.29	2212	41.89	2408	45.60	2609	49.41
	7″×9″×9′ 0″	1197	22.67	1369	25.92	1545	29.26	1727	32.70	1914	36.26	2106	39.89	2306	43.67	2509	47.52	2718	51.48
20 Ties per 33-Ft. Rail	6″×6″×8′ 0″	1121	21.22	1275	24.15	1436	27.20	1601	30.32	1772	33.56	1949	36.91	2131	40.36	2328	44.09	2511	47.56
	6″×6″×8′ 6″	1164	22.04	1327	25.09	1495	28.32	1669	31.61	1848	35.01	2033	38.51	2223	42.11	2419	45.81	2620	49.62
	6″×8″×8′ 0″	1061	20.10	1216	23.03	1376	26.04	1542	29.20	1713	32.44	1890	35.79	2072	39.24	2259	42.78	2452	46.44
	6″×8″×8′ 6″	1102	20.88	1265	23.96	1434	27.15	1607	30.44	1787	33.84	1971	37.33	2162	40.94	2357	44.64	2568	48.64
	7″×9″×8′ 6″	1137	21.53	1300	24.61	1468	27.80	1642	31.10	1821	34.49	2006	37.99	2196	41.59	2392	45.29	2593	49.10
	7″×9″×9′ 0″	1180	22.35	1352	25.60	1528	28.94	1710	32.38	1898	35.94	2089	39.57	2289	43.35	2492	47.20	2701	51.16

TABLE 33B

BALLAST TABLE — SINGLE TRACK — SECTION "B"

Spacing of Ties	Size of Tie	Depth in Inches of Ballast under the Tie																	
		4"		5"		6"		7"		8"		9"		10"		11"		12"	
		Cu. Yds.		Cu. Yds.		Cu. Yds.		Cu. Yds.		Cu. Yds.		Cu. Yds.		Cu. Yds.		Cu. Yds.		Cu. Yds.	
		Per Mile	Per 100 Ft.	Per Mile	Per 100 Ft.	Per Mile	Per 100 Ft.	Per Mile	Per 100 Ft.	Per Mile	Per 100 Ft.	Per Mile	Per 100 Ft.	Per Mile	Per 100 Ft.	Per Mile	Per 100 Ft.	Per Mile	Per 100 Ft.
15 Ties per 30-Ft. Rail	6" × 6" × 8' 0"	1475	27.94	1664	31.52	1858	35.19	2056	38.94	2257	42.75	2463	46.65	2673	50.63	2887	54.68	3105	58.81
	6" × 6" × 8' 6"	1544	29.24	1742	32.99	1940	36.73	2149	40.68	2359	44.64	2583	48.73	2791	52.86	3013	57.06	3239	61.34
	6" × 8" × 8' 0"	1410	26.70	1599	30.28	1793	33.95	1991	37.70	2192	41.51	2398	45.41	2608	49.39	2822	53.44	3040	57.57
	6" × 8" × 8' 6"	1475	27.94	1673	31.69	1871	35.43	2080	39.38	2290	43.38	2504	46.43	2722	51.56	2944	55.76	3170	60.04
	7" × 9" × 8' 6"	1586	30.04	1788	33.86	1993	37.76	2203	41.73	2417	45.78	2635	49.91	2857	54.11	3083	58.40	3313	62.76
	7" × 9" × 9' 0"	1654	31.33	1864	35.30	2078	39.35	2296	43.48	2518	47.69	2744	51.97	2974	56.33	3208	60.77	3447	65.28
16 Ties per 30-Ft. Rail	6" × 6" × 8' 0"	1462	27.69	1651	31.27	1845	35.04	2043	38.69	2244	42.50	2450	46.40	2660	50.38	2874	54.43	3092	58.56
	6" × 6" × 8' 6"	1530	28.98	1738	32.73	1926	36.47	2135	40.42	2345	44.42	2559	48.47	2777	52.60	2999	56.80	3225	61.08
	6" × 8" × 8' 0"	1392	26.36	1581	29.94	1775	33.61	1973	37.36	2174	41.17	2380	45.07	2590	49.05	2804	53.10	3012	57.23
	6" × 8" × 8' 6"	1456	27.58	1654	31.33	1852	35.07	2061	39.02	2271	43.02	2485	47.07	2703	51.20	2925	55.30	3151	59.68
	7" × 9" × 8' 6"	1562	29.58	1764	33.40	1969	37.30	2179	41.27	2393	45.32	2611	49.45	2833	53.65	3059	57.94	3289	62.30
	7" × 9" × 9' 0"	1628	30.83	1838	34.80	2052	38.85	2270	42.98	2492	47.19	2718	51.47	2948	55.83	3182	60.27	3421	64.78
17 Ties per 30-Ft. Rail	6" × 6" × 8' 0"	1449	27.44	1638	31.02	1832	34.69	2030	37.44	2231	42.25	2437	46.15	2647	50.13	2861	54.18	3079	58.31
	6" × 6" × 8' 6"	1516	28.71	1714	32.46	1912	36.20	2121	40.15	2331	44.15	2545	48.20	2763	52.33	2985	56.53	3211	60.81
	6" × 8" × 8' 0"	1375	26.04	1564	29.62	1758	33.29	1956	37.04	2157	40.85	2363	44.75	2573	48.72	2787	52.78	3005	56.91
	6" × 8" × 8' 6"	1434	27.16	1632	30.91	1830	34.65	2039	38.60	2249	42.60	2463	46.65	2681	50.78	2903	54.98	3129	59.26
	7" × 9" × 8' 6"	1537	29.11	1739	32.93	1942	36.83	2154	40.80	2368	44.85	2586	48.98	2808	53.18	3034	57.47	3264	61.83
	7" × 9" × 9' 0"	1603	30.36	1813	34.33	2027	38.38	2245	42.51	2467	46.72	2693	51.00	2923	55.36	3157	59.80	3396	64.31

BALLAST TABLE — SINGLE TRACK — SECTION "B"

Spacing of Tie	Size of Tie	Depth in Inches of Ballast under the Tie																					
		4″		5″		6″		7″		8″		9″		10″		11″		12″	
		Cu. Yds.		Cu. Yds.		Cu. Yds.		Cu. Yds.		Cu. Yds.		Cu. Yds.		Cu. Yds.		Cu. Yds.		Cu. Yds.	
		Per Mile	Per 100 Ft.	Per Mile	Per 100 Ft.	Per Mile	Per 100 Ft.	Per Mile	Per 100 Ft.	Per Mile	Per 100 Ft.	Per Mile	Per 100 Ft.	Per Mile	Per 100 Ft.	Per Mile	Per 100 Ft.	Per Mile	Per 100 Ft.
18 Ties per 30-Ft. Rail	6″×6″×8′ 0″	1436	27.20	1625	30.78	1819	34.45	2017	38.20	2218	42.01	2424	45.91	2634	49.89	2848	53.94	3066	58.07
	6″×6″×8′ 6″	1503	28.47	1701	32.22	1899	35.96	2108	39.91	2318	43.91	2532	47.96	2750	52.09	2969	56.29	3198	60.57
	6″×8″×8′ 0″	1354	25.64	1543	29.22	1737	32.89	1935	36.64	2136	40.45	2342	44.35	2552	48.33	2766	52.34	2984	56.51
	6″×8″×8′ 6″	1419	26.88	1617	30.63	1815	34.37	2024	38.32	2234	42.32	2445	46.37	2666	50.50	2888	54.70	3114	58.98
	7″×9″×8′ 6″	1513	28.66	1715	32.48	1920	36.38	2130	40.35	2344	44.40	2562	48.53	2784	52.73	3010	57.02	3240	61.38
	7″×9″×9′ 0″	1574	29.81	1784	33.78	1998	37.83	2216	41.96	2438	46.17	2664	50.45	2894	54.81	3128	59.25	3367	63.76
18 Ties per 33-Ft. Rail	6″×6″×8′ 0″	1457	27.60	1646	31.18	1840	34.85	2038	38.60	2239	42.41	2445	46.31	2655	50.29	2869	54.34	3087	58.47
	6″×6″×8′ 6″	1525	28.88	1723	32.63	1921	36.37	2130	40.32	2340	44.32	2554	48.37	2772	52.50	2994	56.70	3220	60.98
	6″×8″×8′ 0″	1386	26.22	1575	29.80	1769	33.45	1967	37.22	2168	41.03	2374	44.93	2584	48.91	2798	52.96	3016	57.09
	6″×8″×8′ 6″	1449	27.44	1647	31.19	1845	34.93	2054	39.88	2264	42.88	2475	46.93	2696	51.06	2918	55.26	3144	59.54
	7″×9″×8′ 6″	1553	29.41	1755	33.23	1960	37.13	2170	41.10	2384	45.15	2602	49.28	2824	53.48	3050	57.77	3280	62.13
	7″×9″×9′ 0″	1619	30.66	1829	34.63	2043	38.68	2261	42.81	2483	47.02	2709	51.30	2939	55.66	3173	60.10	3412	64.61
19 Ties per 33-Ft. Rail	6″×6″×8′ 0″	1445	27.36	1634	30.94	1828	34.61	2026	38.36	2227	42.17	2433	46.07	2643	50.05	2857	54.10	3075	58.13
	6″×6″×8′ 6″	1512	28.64	1710	32.39	1908	36.03	2117	40.08	2327	44.08	2541	48.13	2759	52.26	2981	56.46	3207	60.74
	6″×8″×8′ 0″	1370	25.95	1569	29.53	1753	33.20	1951	36.95	2152	40.76	2358	44.66	2578	48.64	2782	52.69	3000	56.82
	6″×8″×8′ 6″	1433	27.14	1631	30.89	1829	34.63	2038	38.58	2248	42.58	2462	46.63	2680	50.76	2902	54.96	3128	59.24
	7″×9″×8′ 6″	1531	29.00	1733	32.82	1938	36.72	2148	40.69	2362	44.74	2580	48.87	2802	53.07	3028	57.36	3258	61.72
	7″×9″×9′ 0″	1596	30.21	1806	34.18	2020	38.23	2238	42.36	2460	46.57	2656	50.85	2916	55.21	3140	59.65	3389	64.16
20 Ties per 33-Ft. Rail	6″×6″×8′ 0″	1433	26.95	1622	30.53	1816	34.20	2014	37.95	2215	41.76	2421	45.66	2631	49.64	2847	53.69	3063	57.82
	6″×6″×8′ 6″	1500	28.41	1698	32.16	1896	35.90	2105	39.85	2315	43.85	2529	47.90	2747	52.03	2969	56.23	3195	60.51
	6″×8″×8′ 0″	1354	25.45	1543	29.03	1737	32.70	1935	36.45	2136	40.26	2342	44.16	2552	48.14	2766	52.19	2984	56.32
	6″×8″×8′ 6″	1416	26.82	1614	30.57	1812	34.31	2021	38.26	2231	42.06	2445	46.31	2663	50.44	2885	54.64	3111	58.92
	7″×9″×8′ 6″	1509	28.39	1711	32.21	1916	36.11	2126	40.08	2340	44.13	2558	48.26	2780	52.46	3006	56.75	3236	61.11
	7″×9″×9′ 0″	1572	29.77	1782	33.74	1996	37.79	2214	41.92	2436	46.13	2633	50.41	2892	54.77	3126	59.21	3365	63.72

TABLE 33C

BALLAST TABLE — SINGLE TRACK — SECTION "C"

Spacing of Ties	Size of Ties	Depth in Inches of Ballast under the Ties																	
		4"		5"		6"		7"		8"		9"		10"		11"		12"	
		Cu. Yds.		Cu. Yds.		Cu. Yds.		Cu. Yds.		Cu. Yds.		Cu. Yds.		Cu. Yds.		Cu. Yds.		Cu. Yds.	
		Per Mile	Per 100 Ft.	Per Mile	Per 100 Ft.	Per Mile	Per 100 Ft.	Per Mile	Per 100 Ft.	Per Mile	Per 100 Ft.	Per Mile	Per 100 Ft.	Per Mile	Per 100 Ft.	Per Mile	Per 100 Ft.	Per Mile	Per 100 Ft.
15 Ties per 30-Ft. Rail	6" × 6" × 8' 0"	1638	31.03	1824	34.92	2054	38.89	2268	42.95	2485	47.07	2707	51.27	2934	35.57	3164	59.92	3398	64.36
	6" × 6" × 8' 6"	1707	33.53	1922	36.40	2136	40.43	2361	44.69	2587	48.96	2827	53.35	3032	57.80	3290	62.30	3532	66.89
	6" × 8" × 8' 0"	1573	29.79	1779	33.69	1989	37.65	2203	41.71	2420	45.83	2642	50.03	2869	54.33	3099	58.68	3333	63.12
	6" × 8" × 8' 6"	1638	31.03	1853	35.10	2067	39.13	2292	43.39	2518	50.10	2748	51.05	2983	56.50	3221	61.00	3463	65.59
	7" × 9" × 8' 6"	1766	33.45	1984	37.56	2205	41.77	2431	46.05	2661	50.41	2896	54.85	3134	59.36	3376	63.96	3623	68.63
	7" × 9" × 9' 0"	1834	34.74	2060	39.00	2290	43.36	2524	47.80	2762	52.32	3005	56.91	3251	61.58	3501	66.33	3757	71.15
16 Ties per 30-Ft. Rail	6" × 6" × 8' 0"	1625	30.78	1831	34.68	2041	38.74	2255	42.70	2472	46.82	2694	51.02	2921	55.32	3151	59.67	3385	64.11
	6" × 6" × 8' 6"	1693	32.07	1918	36.14	2122	40.17	2347	44.43	2573	48.74	2803	52.09	3038	57.54	3276	62.04	3511	66.63
	6" × 8" × 8' 0"	1555	29.45	1761	33.35	1971	37.31	2185	41.37	2402	45.49	2614	49.69	2851	53.99	3081	58.34	3305	62.78
	6" × 8" × 8' 6"	1619	30.67	1834	34.74	2048	38.77	2273	43.03	2499	47.34	2729	51.69	2964	56.14	3202	60.54	3444	65.23
	7" × 9" × 8' 6"	1742	32.99	1960	37.10	2181	41.31	2407	45.59	2637	49.95	2872	54.39	3110	58.90	3352	63.50	3599	68.17
	7" × 9" × 9' 0"	1808	34.24	2034	38.50	2264	42.86	2498	47.30	2736	51.82	2979	56.41	3225	61.08	3475	65.83	3731	70.65
17 Ties per 30-Ft. Rail	6" × 6" × 8' 0"	1612	30.53	1818	34.43	2038	38.39	2242	41.44	2459	46.57	2681	50.77	2908	55.07	3138	59.42	3372	63.86
	6" × 6" × 8' 6"	1679	31.80	1894	35.87	2108	39.90	2332	44.16	2559	48.47	2789	52.82	3024	57.27	3262	61.77	3504	66.36
	6" × 8" × 8' 0"	1538	29.13	1744	33.03	1954	36.99	2168	41.05	2385	45.17	2607	49.37	2834	53.67	3064	58.02	3298	62.46
	6" × 8" × 8' 6"	1597	30.25	1812	34.32	2026	38.35	2251	42.61	2477	46.92	2707	51.27	2942	55.72	3181	60.22	3422	64.81
	7" × 9" × 8' 6"	1717	32.52	1935	36.63	2154	40.84	2382	45.12	2612	49.48	2847	53.92	3085	58.43	3327	63.03	3574	67.70
	7" × 9" × 9' 0"	1783	33.77	2009	38.03	2239	42.39	2473	46.83	2711	51.35	2954	55.94	3200	60.61	3450	65.36	3706	70.18

TABLE 33C — *Continued*

BALLAST TABLE — SINGLE TRACK — SECTION "C"

Spacing of Ties	Size of Ties	Depth in Inches of Ballast under the Ties																	
		4″		5″		6″		7″		8″		9″		10″		11″		12″	
		Cu. Yds.		Cu. Yds.		Cu. Yds.		Cu. Yds.		Cu. Yds.		Cu. Yds.		Cu. Yds.		Cu. Yds.		Cu. Yds.	
		Per Mile	Per 100 Ft.	Per Mile	Per 100 Ft.	Per Mile	Per 100 Ft.	Per Mile	Per 100 Ft.	Per Mile	Per 100 Ft.	Per Mile	Per 100 Ft.	Per Mile	Per 100 Ft.	Per Mile	Per 100 Ft.	Per Mile	Per 100 Ft.
18 Ties per 30-Ft. Rail	6″×6″×8′ 0″	1599	30.29	1805	34.19	2015	38.15	2229	42.21	2446	46.33	2668	50.53	2895	54.83	3125	59.18	3359	63.62
	6″×6″×8′ 6″	1666	31.56	1881	35.63	2095	39.66	2320	43.92	2546	48.23	2776	52.58	3011	57.03	3246	61.53	3491	66.12
	6″×8″×8′ 0″	1517	28.73	1723	32.63	1933	36.59	2147	40.65	2364	44.77	2586	48.97	2813	53.27	3043	57.58	3277	62.06
	6″×8″×8′ 6″	1582	29.97	1797	34.04	2011	38.07	2236	42.33	2462	46.64	2689	50.99	2927	55.44	3165	59.94	3407	64.53
	7″×9″×8′ 6″	1693	32.07	1911	36.18	2132	40.39	2358	44.67	2588	49.03	2823	53.47	3061	57.98	3303	62.58	3550	67.25
	7″×9″×9′ 0″	1754	33.22	1980	37.48	2210	41.84	2444	46.28	2682	50.80	2925	55.39	3171	60.06	3421	64.81	3677	69.63
18 Ties per 33-Ft. Rail	6″×6″×8′ 0″	1620	30.69	1826	34.59	2036	38.35	2250	42.61	2467	46.73	2689	50.93	2916	55.23	3146	59.58	3380	64.02
	6″×6″×8′ 6″	1688	31.97	1903	36.04	2117	40.07	2342	44.33	2568	48.64	2798	52.99	3033	57.44	3271	61.94	3513	66.53
	6″×8″×8′ 0″	1549	29.31	1755	33.21	1965	37.15	2179	41.23	2396	45.35	2618	49.55	2845	53.85	3075	58.20	3309	62.64
	6″×8″×8′ 6″	1612	30.53	1827	34.60	2041	38.63	2266	43.89	2492	47.20	2719	51.55	2957	56.00	3195	61.50	3437	65.09
	7″×9″×8′ 6″	1733	32.82	1951	36.93	2172	41.14	2398	45.42	2628	49.78	2863	54.22	3101	58.73	3343	63.33	3590	68.00
	7″×9″×9′ 0″	1799	34.07	2025	38.33	2255	42.69	2489	47.13	2727	51.65	2970	56.24	3216	60.91	3466	65.66	3722	70.48
19 Ties per 33-Ft. Rail	6″×6″×8′ 0″	1608	30.45	1814	34.45	2024	38.31	2238	42.37	2455	46.49	2677	50.69	2904	54.99	3134	59.34	3368	63.68
	6″×6″×8′ 6″	1675	31.73	1890	35.80	2104	39.73	2329	44.09	2555	48.40	2785	52.75	3020	57.20	3258	61.70	3500	66.29
	6″×8″×8′ 0″	1533	29.04	1649	32.94	1949	36.90	2163	40.96	2308	45.08	2602	49.28	2839	53.58	3059	57.93	3293	62.37
	6″×8″×8′ 6″	1596	30.23	1811	34.30	2025	38.33	2250	42.59	2476	46.90	2706	51.25	2941	55.70	3179	60.20	3421	64.79
	7″×9″×8′ 6″	1711	32.41	1939	36.52	2150	40.73	2376	45.01	2606	49.37	2841	53.81	3079	58.32	3321	62.92	3568	67.59
	7″×9″×9′ 0″	1776	33.62	2002	37.88	2232	42.24	2466	46.68	2704	51.20	2917	55.79	3193	60.46	3433	65.21	3699	70.03
20 Ties per 33-Ft. Rail	6″×6″×8′ 0″	1596	30.04	1802	33.94	2012	37.90	2226	41.96	2443	46.08	2665	50.28	2892	54.58	3124	58.93	3356	63.37
	6″×6″×8′ 6″	1663	31.50	1878	35.57	2092	39.60	2317	43.86	2543	48.17	2773	52.52	3008	56.97	3246	61.47	3488	66.06
	6″×8″×8′ 0″	1517	28.54	1723	32.44	1933	36.40	2147	40.46	2364	44.58	2586	48.78	2813	53.08	3043	57.43	3277	61.87
	6″×8″×8′ 6″	1579	29.91	1794	33.98	2008	38.01	2223	42.27	2459	46.38	2689	50.93	2924	55.38	3162	59.88	3404	64.47
	7″×9″×8′ 6″	1689	31.80	1907	35.91	2128	40.12	2354	44.40	2584	48.76	2829	53.20	3057	57.71	3299	62.31	3546	66.98
	7″×9″×9′ 0″	1752	33.18	1978	37.44	2208	41.80	2442	46.24	2680	50.76	5535	31.69	3169	60.02	3419	64.77	3675	69.59

TABLE 33D

BALLAST TABLE — SINGLE TRACK — SECTION "D"

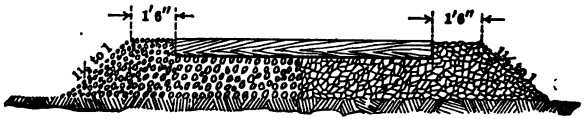

Spacing of Ties	Size of Ties	Depth in Inches of Ballast under the Ties																	
		4"		5"		6"		7"		8"		9"		10"		11"		12"	
		Cu. Yds.		Cu. Yds.		Cu. Yds.		Cu. Yds.		Cu. Yds.		Cu. Yds.		Cu. Yds.		Cu. Yds.		Cu. Yds.	
		Per Mile	Per 100 Ft.	Per Mile	Per 100 Ft.	Per Mile	Per 100 Ft.	Per Mile	Per 100 Ft.	Per Mile	Per 100 Ft.	Per Mile	Per 100 Ft.	Per Mile	Per 100 Ft.	Per Mile	Per 100 Ft.	Per Mile	Per 100 Ft.
15 Ties per 30-Ft. Rail	6" × 6" × 8' 0"	1801	34.12	2004	38.34	2250	42.59	2480	46.96	2713	51.39	2951	55.89	3195	60.51	3441	65.16	3691	69.91
	6" × 6" × 8' 6"	1870	35.42	2102	39.81	2332	44.13	2573	48.70	2815	53.28	3071	57.97	3313	62.74	3567	67.54	3825	72.44
	6" × 8" × 8' 0"	1736	32.88	1959	37.10	2185	41.35	2415	45.72	2648	50.15	2886	54.65	3130	59.27	3376	63.92	3626	67.67
	6" × 8" × 8' 6"	1801	34.12	2033	38.51	2263	42.83	2504	47.40	2746	52.02	2992	55.67	3244	61.44	3498	66.24	3756	71.14
	7" × 9" × 8' 6"	1946	36.86	2180	41.26	2317	45.78	2659	50.37	2905	55.04	3157	59.79	3411	64.61	3669	69.52	3933	74.50
	7" × 9" × 9' 0"	2014	38.15	2256	42.70	2502	47.37	2752	52.12	3006	56.95	3266	61.85	3528	66.83	3794	71.89	4067	77.02
16 Ties per 30-Ft. Rail	6" × 6" × 8' 0"	1788	33.87	2011	38.09	2237	42.44	2467	46.71	2700	51.14	2938	55.64	3182	60.26	3428	64.91	3678	69.66
	6" × 6" × 8' 6"	1856	35.16	2098	39.55	2318	43.87	2559	48.44	2801	53.06	3047	57.71	3299	62.48	3553	67.28	3811	72.18
	6" × 8" × 8' 0"	1718	32.54	1941	36.71	2167	41.01	2397	45.38	2630	49.81	2868	54.31	3112	58.93	3358	63.58	3598	68.33
	6" × 8" × 8' 6"	1786	33.76	2014	38.15	2244	42.47	2485	47.04	2727	51.66	2973	56.31	3225	60.08	3479	65.78	3737	70.78
	7" × 9" × 8' 6"	1922	36.40	2156	40.80	2393	45.32	2635	49.91	2881	54.58	3133	59.33	3387	64.15	3645	69.06	3909	74.04
	7" × 9" × 9' 0"	1988	37.65	2230	42.20	2476	46.87	2726	51.62	2980	56.45	3240	61.35	3502	66.33	3768	71.39	4041	76.52
17 Ties per 30-Ft. Rail	6" × 6" × 8' 0"	1775	33.62	1998	37.84	2224	42.09	2454	45.46	2689	50.89	2925	55.39	3169	60.01	3415	64.66	3665	69.41
	6" × 6" × 8' 6"	1842	34.89	2074	39.28	2304	43.60	2545	48.17	2787	52.79	3033	57.44	3285	62.21	3539	67.01	3797	71.91
	6" × 8" × 8' 0"	1701	32.22	1824	36.44	2150	40.69	2380	45.06	2613	49.49	2851	53.99	3095	58.61	3341	63.26	3591	68.01
	6" × 8" × 8' 6"	1760	33.34	1992	37.73	2222	42.05	2463	46.62	2705	51.24	2951	55.89	3203	60.66	3457	65.46	3715	70.36
	7" × 9" × 8' 6"	1897	35.93	2131	40.33	2366	44.85	2610	49.44	2856	54.11	3108	58.86	3362	63.68	3620	68.57	3884	73.57
	7" × 9" × 9' 0"	1963	37.18	2205	41.73	2451	46.40	2701	51.15	2955	55.98	3215	60.88	3477	65.86	3743	70.92	4016	76.05

TABLE 55D — *Continued*

BALLAST TABLE — SINGLE TRACK — SECTION "D"

Spacing of Ties	Size of Ties	Depth in Inches of Ballast under the Ties																	
		4″		5″		6″		7″		8″		9″		10″		11″		12″	
		Cu. Yds.		Cu. Yds.		Cu. Yds.		Cu. Yds.		Cu. Yds.		Cu. Yds.		Cu. Yds.		Cu. Yds.		Cu. Yds.	
		Per Mile	Per 100 Ft.	Per Mile	Per 100 Ft.	Per Mile	Per 100 Ft.	Per Mile	Per 100 Ft.	Per Mile	Per 100 Ft.	Per Mile	Per 100 Ft.	Per Mile	Per 100 Ft.	Per Mile	Per 100 Ft.	Per Mile	Per 100 Ft.
18 Ties per 30-Ft. Rail	6″×6″×8′ 0″	1762	33.38	1985	37.60	2211	41.85	2441	46.22	2674	50.65	2912	55.15	3156	59.77	3402	64.42	3652	68.17
	6″×6″×8′ 6″	1829	34.65	2061	39.04	2291	43.36	2532	47.93	2774	52.55	3020	57.20	3272	61.97	3523	66.77	3784	71.67
	6″×8″×8′ 0″	1680	31.82	1903	36.04	2129	40.29	2359	44.66	2592	49.09	2830	53.59	3074	58.21	3320	62.82	3570	67.61
	6″×8″×8′ 6″	1745	33.06	1977	37.45	2207	41.77	2448	46.34	2690	50.96	2933	55.61	3188	60.38	3444	65.18	3700	70.08
	7″×9″×8′ 6″	1873	35.48	2107	39.88	2344	44.40	2586	48.99	2832	53.66	3084	58.41	3338	63.23	3596	68.14	3860	73.12
	7″×9″×9′ 0″	1934	36.63	2176	41.18	2422	45.85	2672	50.60	2926	55.43	3186	60.33	3448	65.31	3714	70.37	3987	75.50
18 Ties per 33-Ft. Rail	6″×6″×8′ 0″	1783	33.78	2006	38.00	2232	42.25	2462	46.62	2695	51.05	2933	55.55	3177	60.17	3423	64.82	3673	69.57
	6″×6″×8′ 6″	1851	35.06	2083	39.45	2313	43.77	2554	48.34	2796	52.96	3042	57.61	3294	62.38	3548	67.18	3806	72.08
	6″×8″×8′ 0″	1712	32.40	1935	36.62	2161	40.85	2391	45.24	2624	49.67	2862	54.17	3106	58.79	3352	63.44	3602	68.19
	6″×8″×8′ 6″	1775	33.62	2007	38.01	2237	42.33	2478	47.90	2720	51.52	2963	56.17	3218	60.94	3472	65.74	3730	70.64
	7″×9″×8′ 6″	1913	36.23	2147	40.63	2384	45.15	2626	49.74	2878	54.41	3124	59.16	3378	63.98	3636	68.89	3900	73.87
	7″×9″×9′ 0″	1979	37.48	2221	42.03	2467	44.70	2717	51.45	2971	56.28	3231	61.18	3493	66.16	3759	71.22	4032	76.35
19 Ties per 33-Ft. Rail	6″×6″×8′ 0″	1771	33.54	1994	37.76	2220	42.01	2454	46.38	2683	50.81	2921	55.31	3165	59.93	3411	64.58	3661	69.23
	6″×6″×8′ 6″	1838	34.82	2070	39.21	2300	43.43	2541	48.10	2783	52.72	3029	57.37	3281	62.14	3535	66.94	3793	71.84
	6″×8″×8′ 0″	1696	32.13	1929	46.35	2145	40.60	2375	47.97	2708	49.40	2846	53.90	3100	58.52	3336	63.17	3586	67.92
	6″×8″×8′ 6″	1759	33.32	1991	37.71	2221	42.03	2462	46.60	2704	51.22	2950	55.87	3202	60.64	3456	65.44	3714	70.34
	7″×9″×8′ 6″	1891	35.82	2125	40.22	2362	44.74	2604	49.33	2850	54.00	3102	58.75	3356	63.57	3614	68.48	3878	73.46
	7″×9″×9′ 0″	1956	37.03	2198	41.58	2444	46.25	2694	51.00	2948	55.83	3178	60.73	3470	65.71	3726	70.77	4009	75.90
20 Ties per 33-Ft. Rail	6″×6″×8′ 0″	1759	33.13	1982	37.35	2208	41.60	2438	45.97	2671	50.40	2909	54.90	3153	59.52	3401	64.17	3649	67.92
	6″×6″×8′ 6″	1826	34.59	2058	38.98	2288	43.30	2529	47.87	2771	52.49	3017	57.14	3269	61.91	3523	66.71	3781	71.61
	6″×8″×8′ 0″	1680	31.63	1903	35.85	2139	40.10	2359	44.47	2592	48.90	2830	53.40	3074	58.02	3320	62.67	3570	67.42
	6″×8″×8′ 6″	1742	33.00	1974	37.39	2204	41.71	2445	46.28	2687	50.70	2933	55.55	3185	60.32	3439	65.12	3697	70.02
	7″×9″×8′ 6″	1869	35.21	2103	39.61	2340	44.13	2582	48.72	2828	53.39	3080	58.14	3334	62.96	3592	67.87	3856	72.85
	7″×9″×9′ 0″	1932	36.59	2174	41.14	2420	45.81	2670	50.56	2924	55.39	3155	60.29	3446	65.27	3712	70.33	3985	75.46

TABLE 33E

BALLAST TABLE — DOUBLE TRACK — SECTION "E" — TRACKS 14 FEET CENTER TO CENTER

Spacing of Ties		Size of Ties	Depth in Inches of Ballast under the Ties									
			8"		9"		10"		11"		12"	
			Cu. Yds.		Cu. Yds.		Cu. Yds.		Cu. Yds.		Cu. Yds.	
Number of Ties per Rail	Length of Rail in Feet		Per Mile	Per 100 Ft.	Per Mile	Per 100 Ft.	Per Mile	Per 100 Ft.	Per Mile	Per 100 Ft.	Per Mile	Per 100 Ft.
15	30	6"×6"×8' 0"	5483	103.86	5934	112.38	6388	120.99	6846	129.67	7309	138.43
15	30	6"×6"×8' 6"	5573	105.56	6031	114.41	6494	122.99	6961	131.83	7431	140.74
15	30	6"×8"×8' 0"	5353	101.39	5804	109.91	6258	118.52	6716	127.19	7179	135.96
15	30	6"×8"×8' 6"	5435	102.92	5892	111.70	6356	120.37	6822	129.21	7293	138.12
15	30	7"×9"×8' 6"	5719	108.32	6182	117.09	6649	125.92	7119	134.83	7594	143.83
15	30	7"×9"×9' 0"	5800	109.84	6270	118.75	6745	127.74	7223	136.81	7706	145.95
16	30	6"×6"×8' 0"	5458	103.36	5908	111.89	6362	120.49	6820	129.16	7283	137.93
16	30	6"×6"×8' 6"	5546	105.03	6003	113.70	6466	122.47	6933	131.31	7403	140.21
16	30	6"×8"×8' 0"	5318	100.73	5769	109.26	6223	117.86	6681	126.54	7144	135.31
16	30	6"×8"×8' 6"	5398	102.23	5856	110.93	6319	119.67	6785	128.50	7256	137.42
16	30	7"×9"×8' 6"	5671	107.39	6134	116.17	6600	125.00	7071	133.92	7545	142.89
16	30	7"×9"×9' 0"	5748	108.87	6219	117.78	6693	126.77	7172	135.83	7655	144.03
17	30	6"×6"×8' 0"	5432	102.87	5882	111.39	6336	120.00	6794	128.68	7257	137.44
17	30	6"×6"×8' 6"	5518	104.51	5976	113.17	6439	121.94	6905	130.78	7376	139.69
17	30	6"×8"×8' 0"	5284	100.07	5734	108.59	6188	117.10	6647	125.88	7109	134.64
17	30	6"×8"×8' 6"	5354	101.41	5811	110.06	6274	118.83	6740	127.66	7211	136.58
17	30	7"×9"×8' 6"	5622	106.46	6085	115.25	6552	124.09	7022	132.99	7497	141.99
17	30	7"×9"×9' 0"	5697	107.89	6167	116.81	6642	125.79	7121	135.05	7603	144.00

TABLE 33E — *Continued*

BALLAST TABLE — DOUBLE TRACK — SECTION "E" — TRACKS 14 FEET CENTER TO CENTER

Spacing of Ties		Size of Ties	Depth in Inches of Ballast under the Ties									
			8″		9″		10″		11″		12″	
			Cu. Yds.		Cu. Yds.		Cu. Yds.		Cu. Yds.		Cu. Yds.	
Number of Ties per Rail	Length of Rail in Feet		Per Mile	Per 100 Ft.	Per Mile	Per 100 Ft.	Per Mile	Per 100 Ft.	Per Mile	Per 100 Ft.	Per Mile	Per 100 Ft.
18	30	6″×6″×8′ 0″	5406	102.38	5856	110.90	6310	119.51	6769	128.20	7231	136.89
18	30	6″×6″×8′ 6″	5490	103.98	5948	112.67	6411	121.42	6877	130.25	7348	139.17
18	30	6″×8″×8′ 0″	5249	99.41	5699	107.94	6153	116.54	6612	125.21	7074	133.98
18	30	6″×8″×8′ 6″	5324	100.83	5782	109.59	6245	118.27	6711	127.11	7182	136.02
18	30	7″×9″×8′ 6″	5574	105.57	6037	114.34	6503	123.17	6974	132.08	7449	141.07
18	30	7″×9″×9′ 0″	5640	106.82	6110	115.73	6585	124.76	7064	133.79	7547	142.93
18	33	6″×6″×8′ 0″	5448	103.18	5898	111.71	6353	120.31	6811	129.00	7273	137.75
18	33	6″×6″×8′ 6″	5536	104.84	5993	113.51	6456	122.28	6923	131.11	7393	140.02
18	33	6″×8″×8′ 0″	5306	100.49	5756	109.01	6210	117.62	6669	126.30	7131	135.06
18	33	6″×8″×8′ 6″	5384	101.98	5842	110.72	6305	119.42	6772	128.25	7242	137.16
18	33	7″×9″×8′ 6″	5653	107.06	6116	115.84	6583	124.67	7054	133.59	7528	142.57
18	33	7″×9″×9′ 0″	5729	108.51	6200	117.42	6675	126.41	7153	135.48	7636	144.62
19	33	6″×6″×8′ 0″	5424	102.73	5875	111.26	6328	119.87	6787	128.55	7250	137.32
19	33	6″×6″×8′ 6″	5510	104.36	5966	112.99	6431	121.80	6898	130.63	7368	139.55
19	33	6″×8″×8′ 0″	5274	99.89	5724	108.44	6178	117.02	6637	125.70	7099	134.46
19	33	6″×8″×8′ 6″	5351	101.34	5805	109.94	6271	118.78	6738	127.54	7209	136.52
19	33	7″×9″×8′ 6″	5609	106.23	6072	115.00	6539	123.83	7009	132.75	7484	141.73
19	33	7″×9″×9′ 0″	5683	107.63	6133	116.54	6628	125.53	7107	134.59	7589	145.44
20	33	6″×6″×8′ 0″	5401	102.27	5851	110.81	6305	119.32	6764	128.08	7226	136.85
20	33	6″×6″×8′ 6″	5485	103.88	5943	112.55	6406	121.31	6872	130.16	7343	139.07
20	33	6″×8″×8′ 0″	5243	99.29	5693	107.82	6147	116.42	6605	125.11	7068	133.86
20	33	6″×8″×8′ 6″	5317	100.71	5775	109.37	6238	118.14	6704	126.98	7175	135.89
20	33	7″×9″×8′ 6″	5565	105.39	6028	113.98	6495	123.01	6965	131.91	7440	140.91
20	33	7″×9″×9′ 0″	5636	106.74	6107	115.65	6581	124.65	7060	133.71	7543	142.85

TABLE 33F

BALLAST TABLE—DOUBLE TRACK—SECTION "E"—TRACKS 15 FEET CENTER TO CENTER

Spacing of Ties		Size of Ties	Depth in Inches of Ballast under the Ties									
			8″		9″		10″		11″		12″	
			Cu. Yds.		Cu. Yds.		Cu. Yds.		Cu. Yds.		Cu. Yds.	
Number of Ties per Rail	Length of Rail in Feet		Per Mile	Per 100 Ft.	Per Mile	Per 100 Ft.	Per Mile	Per 100 Ft.	Per Mile	Per 100 Ft.	Per Mile	Per 100 Ft.
15	30	6″×6″×8′ 0″	5711	108.18	6178	117.01	6649	125.93	7123	134.92	7602	143.99
15	30	6″×6″×8′ 6″	5801	109.88	6275	119.04	6755	127.93	7238	137.08	7724	146.30
15	30	6″×8″×8′ 0″	5581	105.71	6048	114.54	6519	123.46	6993	132.44	7472	141.52
15	30	6″×8″×8′ 6″	5663	107.24	6136	116.33	6617	125.31	7099	134.46	7586	143.68
15	30	7″×9″×8′ 6″	5963	112.95	6443	122.03	6926	131.17	7412	140.39	7804	149.69
15	30	7″×9″×9′ 0″	6044	114.47	6531	123.69	7022	132.99	7516	142.37	8016	151.81
16	30	6″×6″×8′ 0″	5686	107.68	6152	116.52	6623	125.43	7097	134.41	7576	143.49
16	30	6″×6″×8′ 6″	5774	109.35	6247	118.33	6727	127.41	7210	136.56	7696	145.77
16	30	6″×8″×8′ 0″	5546	105.05	6013	113.89	6484	122.80	6958	131.89	7437	140.87
16	30	6″×8″×8′ 6″	5626	106.55	6100	115.56	6580	124.61	7065	133.75	7549	142.98
16	30	7″×9″×8′ 6″	5915	112.02	6395	121.11	6877	130.25	7364	139.48	7855	148.74
16	30	7″×9″×9′ 0″	5992	113.50	6480	122.72	6970	132.02	7465	141.39	7965	149.89
17	30	6″×6″×8′ 0″	5660	107.19	6126	116.02	6597	124.94	7071	133.93	7550	143.00
17	30	6″×6″×8′ 6″	5746	108.83	6220	117.80	6700	126.88	7182	136.03	7669	145.25
17	30	6″×8″×8′ 0″	5512	104.39	5978	113.22	6449	122.04	6924	131.13	7402	140.20
17	30	6″×8″×8′ 6″	5582	105.73	6055	114.69	6535	123.77	7017	132.91	7504	142.14
17	30	7″×9″×8′ 6″	5866	111.09	6346	120.19	6829	129.34	7315	138.55	7807	147.85
17	30	7″×9″×9′ 0″	5941	112.52	6428	121.75	6919	131.04	7414	140.61	7913	149.86
18	30	6″×6″×8′ 0″	5634	106.07	6100	115.53	6571	124.45	7046	133.45	7524	142.45
18	30	6″×6″×8′ 6″	5718	108.30	6192	117.28	6672	126.36	7154	135.50	7641	144.73
18	30	6″×8″×8′ 0″	5477	103.73	5943	112.57	6414	121.48	6889	130.46	7367	139.54
18	30	6″×8″×8′ 6″	5552	105.15	6026	114.22	6506	123.21	6988	132.36	7475	141.58
18	30	7″×9″×8′ 6″	5818	110.20	6298	119.28	6780	128.42	7367	137.64	7759	146.93
18	30	7″×9″×9′ 0″	5884	111.45	6371	120.67	6852	130.01	7357	139.35	7857	148.79

TABLE 33F — *Continued*

BALLAST TABLE — DOUBLE TRACK — SECTION "E" — TRACKS 15 FEET CENTER TO CENTER

Spacing of Ties		Size of Ties	Depth in Inches of Ballast under the Ties									
			8″		9″		10″		11″		12″	
			Cu. Yds.		Cu. Yds.		Cu. Yds.		Cu. Yds.		Cu. Yds.	
Number of Ties per Rail	Length of Rail in Feet		Per Mile	Per 100 Ft.	Per Mile	Per 100 Ft.	Per Mile	Per 100 Ft.	Per Mile	Per 100 Ft.	Per Mile	Per 100 Ft.
18	33	6″×6″×8′ 0″	5678	107.50	6142	116.34	6614	125.25	7088	134.25	7566	143.41
18	33	6″×6″×8′ 6″	5764	109.16	6237	118.14	6717	127.22	7200	136.36	7686	145.58
18	33	6″×8″×8′ 0″	5534	104.81	6000	113.64	6471	122.56	6946	131.55	7424	140.62
18	33	6″×8″×8′ 6″	5612	106.31	6086	115.35	6566	124.36	7079	133.50	7535	142.72
18	33	7″×9″×8′ 6″	6897	111.69	6377	120.78	6860	129.92	7347	139.15	7838	148.43
18	33	7″×9″×9′ 0″	5973	113.14	6461	122.36	6952	131.66	7446	141.04	7946	150.48
19	33	6″×6″×8′ 0″	5652	107.05	6119	115.89	6589	124.81	7064	133.80	7543	142.88
19	33	6″×6″×8′ 6″	5738	108.68	6210	117.62	6692	126.74	7175	135.88	7661	145.11
19	33	6″×8″×8′ 0″	5502	104.21	5968	113.07	6439	121.96	6914	130.95	7392	140.02
19	33	6″×8″×8′ 6″	5579	105.66	6049	114.57	6542	123.72	7015	132.79	7502	142.08
19	33	7″×9″×8′ 6″	5853	110.86	6333	119.94	6816	129.08	7302	138.31	7794	147.59
19	33	7″×9″×9′ 0″	5927	112.26	6394	121.48	6905	130.78	7400	140.15	7899	151.30
20	33	6″×6″×8′ 0″	5629	106.59	6095	115.44	6566	124.26	7041	133.33	7519	142.41
20	33	6″×6″×8′ 6″	5713	108.20	6187	117.18	6667	126.25	7149	135.41	7636	144.63
20	33	6″×8″×8′ 0″	5471	103.61	5937	112.42	6408	121.36	6882	130.36	7361	139.42
20	33	6″×8″×8′ 6″	5545	105.03	6079	114.00	6499	123.08	6981	132.23	7468	141.45
20	33	7″×9″×8′ 6″	5809	110.02	6289	118.92	6772	128.26	7258	137.47	7750	146.77
20	33	7″×9″×9′ 0″	5880	111.37	6368	120.59	6858	129.90	7353	139.27	7853	148.71

TABLE 34

DRAINAGE AREAS

Sq. Ft. Opening $= C \sqrt[4]{(\text{Drainage Area, in Acres})^3}$

Acres Drained	Steep Slopes $C=1$	Moderately Steep Slopes. $C=\frac{2}{3}$	Rolling Land $C=\frac{1}{2}$	Flat Farm Lands $C=\frac{1}{4}$
	Sq. Ft. Opening Required			
10	5.6	2.7	1.9	1.1
20	9.5	6.3	3.2	1.9
30	12.8	8.5	4.3	2.6
40	15.9	10.6	5.3	3.2
50	18.8	12.5	6.3	3.8
60	21.5	14.3	7.2	4.3
70	24.2	16.1	8.1	4.8
80	26.7	17.8	8.9	5.3
90	29.2	19.5	9.7	5.8
100	31.6	21.1	10.5	6.3
150	42.9	28.6	14.3	8.6
160	44.9	29.9	15.0	9.0
200	53.2	35.5	17.7	10.6
240	60.9	40.6	20.3	12.2
300	72.1	48.1	24.0	14.4
320	75.9	50.6	25.3	15.2
400	89.4	59.6	29.8	17.9
480	102.5	68.3	34.2	20.5
500	105.7	70.5	35.2	21.1
560	115.1	76.7	38.4	23.0
600	121.2	80.8	40.4	24.2
640	127.2	84.8	42.4	25.4
800	150.4	100.3	50.1	30.1
1000	177.8	118.5	59.3	35.6
2000	299.0	199.3	99.7	59.8
2500	353.5	235.7	117.8	70.7
3600	464.8	309.9	154.9	93.0
5000	594.6	396.4	198.2	118.9
6000	681.7	454.5	227.2	136.3
7000	765.3	510.2	255.1	153.1
8000	845.9	563.9	282.0	169.2
9000	924.4	616.3	308.1	184.9
10000	1000.0	666.7	333.3	200.0

I.C.R.R. Co. 1906. Extended, 1909, by S. S. R.

TABLE 35

CAST IRON PIPE

Diameter	Thickness	Weight, Gross Tons Per Lin. Ft.	Wgt., Gross Tons Per 12′ Sect.
D	*t*		
12	$\frac{9}{16}$	0.0334	0.40
16	$\frac{11}{16}$	0.0528	0.63
18	$\frac{13}{16}$	0.0651	0.78
20	$\frac{15}{16}$	0.0781	0.94
24	1	0.0967	1.16
30	$1\frac{1}{8}$	0.1265	1.52
36	$1\frac{3}{8}$	0.1786	2.14
42	$1\frac{3}{4}$	0.2418	2.90
48	2	0.2975	3.57

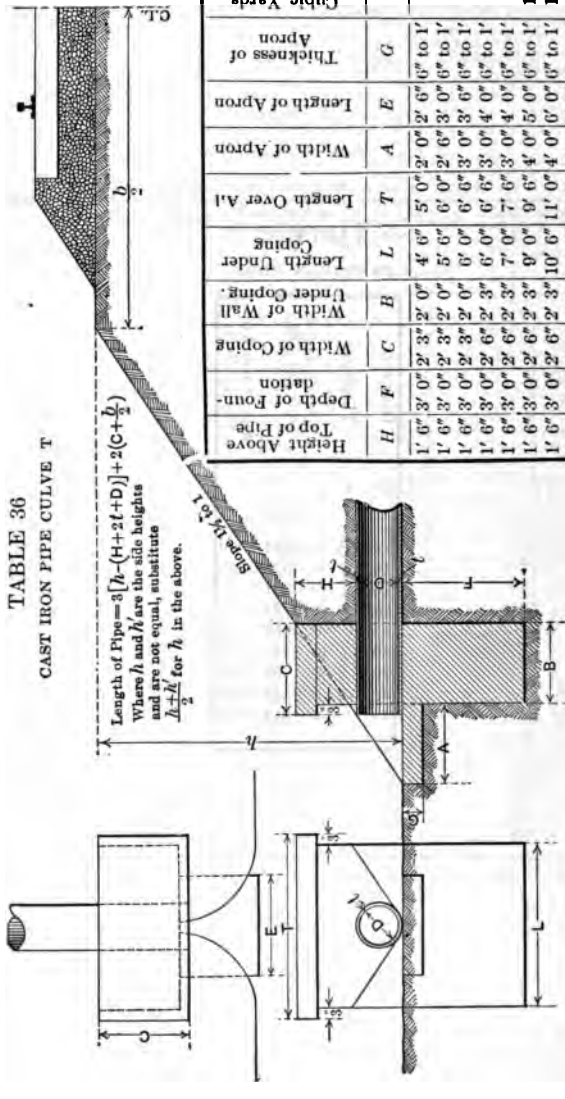

TABLE 36

CAST IRON PIPE CULVE T

Height Above Top of Pipe	Depth of Foundation	Width of Coping	Width of Wall Under Coping.	Length Under Coping	Length Over All	Width of Apron	Length of Apron	Thickness of Apron	Cubic Yards, Masonry Both Ends
H	F	C	B	L	T	A	E	G	
1' 6"	3' 0"	2' 3"	2' 0"	4' 6"	5' 0"	2' 0"	2' 6"	6" to 1'	3.02
1' 6"	3' 0"	2' 3"	2' 0"	5' 6"	6' 0"	2' 6"	3' 0"	6" to 1'	5.02
1' 6"	3' 0"	2' 3"	2' 0"	6' 0"	6' 6"	3' 0"	3' 6"	6" to 1'	5.66
1' 6"	3' 0"	2' 6"	2' 3"	6' 0"	6' 6"	3' 0"	4' 0"	6" to 1'	6.46
1' 6"	3' 0"	2' 6"	2' 3"	7' 0"	7' 6"	3' 0"	4' 0"	6" to 1'	7.75
1' 6"	3' 0"	2' 6"	2' 3"	8' 0"	9' 6"	4' 0"	5' 0"	6" to 1'	10.76
1' 6"	3' 0"	2' 6"	2' 3"	10' 6"	11' 0"	4' 0"	6' 0"	6" to 1'	13.23
1' 6"	3' 0"	2' 6"	2' 3"	12' 6"	13' 0"	5' 6"	7' 0"	6" to 1'	17.81
1' 6"	3' 0"	2' 6"	2' 3"	14' 6"	15' 0"	7' 0"	8' 0"	6" to 1'	22.27

Fig. 73.

TABLE 37

STONE BOX CULVERTS

NOTE. — Side walls are to be built with a footing projecting 6″ to 9″ on the inside when in the judgment of the engineer it may seem necessary owing to extremely soft ground.

Apron walls shall be carried down to a depth of not less than 3 feet below the top of paving and as much more as may seem proper in the judgment of the engineer.

Paving shall begin against and immediately behind the apron wall and shall be slightly inclined in the direction of the current.

Length back to back of parapet equals

$$L = 3\left[\frac{h + h'}{2} - (D + t + H)\right] + b.$$

Total length $= LT = L + 2(P + A)$.

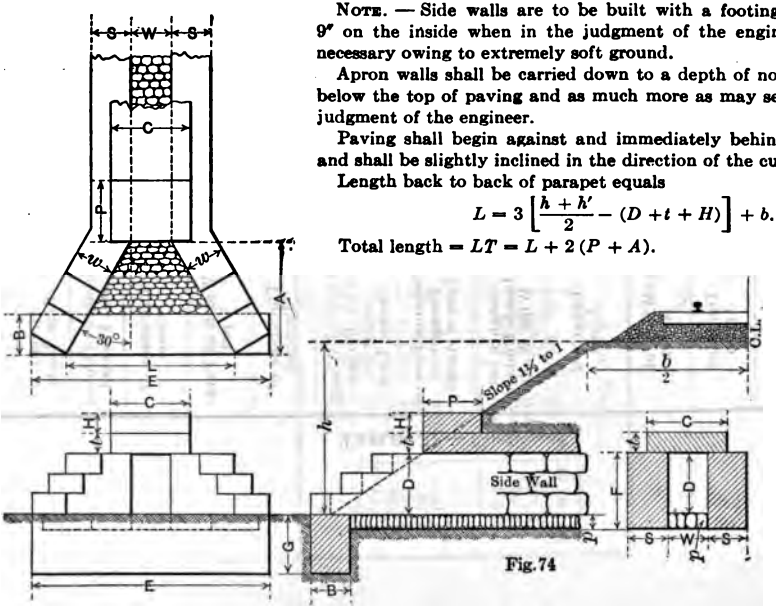

Fig. 74

TABLE 37 — *Continued*

Opening Width × Height	Width, Side Walls	Height, Side Walls	Length of Cover and Parapet	Thickness of Cover	Width of Parapet	Thickness of Parapet	Angle of Wings with Perpendicular to Center Line	Distance Face of Parapet to Face of Apron	Distance bet. Inside Ends of Wing Walls	Length of Apron	Width of Apron	Depth of Apron	Thickness of Paving	Width of Wing Walls	Cubic Yards per Linear Foot of Culvert	Cubic Yards, Masonry Both Ends
$W \times D$	S	F	C	t	P	H	α	A	L	E	B	G	p	w		
2′ × 3′	2′ 0″	3′ 9″	4′ 0″	1′ 0″	3′ 0″	1′ 0″	30° 0′	5′ 6″	8′ 4″	11′ 10″	2′ 0″	3′ 0″	0′ 9″	2′ 0″	0.76	16.1
3′ × 3′	2′ 6″	3′ 9″	5′ 0″	1′ 0″	3′ 0″	1′ 0″	30° 0′	5′ 9″	9′ 8″	14′ 0″	2′ 6″	3′ 0″	0′ 9″	2′ 6″	0.96	21.3
3′ × 4′	3′ 0″	4′ 9″	5′ 0″	1′ 0″	3′ 0″	1′ 0″	30° 0′	7′ 6″	11′ 8″	16′ 10″	2′ 6″	3′ 0″	0′ 9″	3′ 0″	1.32	31.7
4′ × 4′	3′ 0″	4′ 9″	6′ 0″	1′ 0″	3′ 0″	1′ 0″	30° 0′	7′ 6″	12′ 8″	17′ 10″	2′ 6″	3′ 0″	0′ 9″	3′ 0″	1.39	33.2
4′ × 5′	3′ 0″	5′ 9″	6′ 0″	1′ 0″	3′ 0″	1′ 0″	30° 0′	9′ 0″	14′ 5″	19′ 7″	2′ 6″	3′ 0″	0′ 9″	3′ 0″	1.61	41.2
4′ × 6′	3′ 6″	6′ 9″	6′ 0″	1′ 0″	3′ 0″	1′ 0″	30° 0′	10′ 6″	16′ 2″	21′ 4″	2′ 6″	3′ 0″	0′ 9″	3′ 0″	2.08	51.6

The Cubic Contents Include Paving.

TABLE 38

ARCH CULVERTS

Size	Height of Top of Foundation to Base of Coping	Area of Opening Sq. Ft.	Cubic Yards			
			Per Linear Foot	Sq. End Walls Both Ends	Straight Wing Walls Both Ends	30 Degree Wing Walls Both Ends
4′ 0″	5′–3″	15.0	1.36			
5′–0″	7′–6″	26.0	2.00	28.0	32.0	41.0
6′–0″	9′–6″	39.0	2.84	72.0	51.0	67.0
8′–0″	11′–9″	66.0	3.93	115.0	82.0	113.0
10′–0″	14′–4″	102.0	5.59	208.0	149.0	164.0
12′–0″	15′–0″	135.0	6.35	223.0	166.0	172.0
14′–0″	18′–6″	195.0	8.12	392.0	274.0	302.0
16′–0″	22′–0″	267.0	10.84	663.0	469.0	440.0
20′–0″	24′–9″	376.0	14.56	1054.0	790.0	864.0

Illinois Central R. R. Co.

TABLE 39

DECK PLATE GIRDER

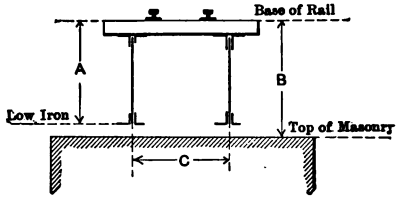

Fig. 75.

Shear in Thousands of Pounds per Rail. Loading, 2-188.75-ton Engines followed by 6000 Pounds per Linear Foot Uniform Load

Span	Total E. S.	*A*	*B*	*C*	Wt. of Span
30′ 0″	94.0	4′ 10⅞″	4′ 10 9/16″	7′ 0″	18000 lbs.
35′ 0″	103.5	5′ 2⅜″	5′ 2⅜″	7′ 0″	22000 "
40′ 0″	113.5	5′ 9½″	5′ 9¼″	7′ 0″	28000 "
45′ 0″	123.5	6′ 3½″	6′ 3¼″	7′ 0″	34000 "
50′ 0″	132.5	6′ 9¼″	6′ 8¾″	7′ 0″	40000 "
55′ 0″	141.0	7′ 1″	7′ 1¼″	7′ 0″	46000 "
60′ 0″	150.0	7′ 4″	7′ 10½″	7′ 0″	57000 "
65′ 0″	165.0	8′ 6″	9′ 0¼″	8′ 0″	62000 "
70′ 0″	176.0	9′ 4″	9′ 10¼″	8′ 0″	68000 "
75′ 0″	189 0	9′ 6¼″	10′ 0¼″	8′ 0″	78000 "
80′ 0″	202.0	9′ 8⅞″	11′ 4¼″	8′ 0″	90000 "
85′ 0″	216.0	10′ 0″	11′ 7¼″	9′ 0″	100000 "
90′ 0″	228 0	10′ 2 3/16″	11′ 9¼″	9′ 0″	114000 "
95′ 0″	242.0	10′ 2⅜″	11′ 9¼″	9′ 0″	130000 "
100′ 0″	259.0	10′ 4⅜″	11′ 11¼″	9′ 0″	150000 "
110′ 0″	295.0	10′ 9⅜″	12′ 3¼″	9′ 6″	225000 "

NOTE — In all spans, 30′–0″ to 60′–0″ in length, one girder will weigh 45% of the total weight of span.

In all spans, 65′–0″ to 110′–0″ in length, one girder will weigh 46.5% of the total weight of span.

Compiled by Chas. Chandler, Illinois Central R. R. Co.

TABLE 40

THROUGH PLATE GIRDER SPANS

I-BEAM FLOOR

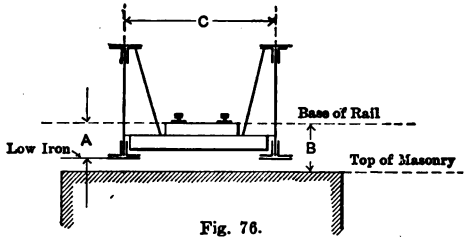

Fig. 76.

Shear in Thousands of Pounds per Rail. Loading, 2-188.5-ton Engines, followed by 6000 Pounds per Linear Foot Uniform Load

Span	Total E. S.	*A*	*B*	*C*	Wt. of Span
30′ 0″	98.0	2′ 1 13/16″	2′ 1 15/16″	15′ 0″	40000 lbs.
35′ 0″	108.0	2′ 2 1/16″	2′ 1 15/16″	16′ 0″	48000 "
40′ 0″	118.0	2′ 2 1/16″	2′ 1 15/16″	17′ 0″	58000 "
45′ 0″	129.0	2′ 2 5/16″	2′ 2 1/16″	17′ 6″	68000 "
50′ 0″	139.0	2′ 2 7/16″	2′ 2 1/16″	17′ 6″	77000 "
55′ 0″	148.0	2′ 2 11/16″	2′ 9 1/8″	17′ 6″	88000 "
60′ 0″	158.0	2′ 2 7/8″	2′ 9 1/8″	17′ 6″	98000 "
65′ 0″	170.0	2′ 3″	2′ 9 1/8″	17′ 6″	111000 "
70′ 0″	182.0	2′ 3 3/16″	3′ 9 1/8″	17′ 6″	120000 "
75′ 0″	194.0	2′ 3 5/16″	3′ 10 1/4″	17′ 6″	133000 "
80′ 0″	207.0	2′ 2 7/8″	3′ 10 1/4″	17′ 6″	149000 "
85′ 0″	220.0	2′ 3 1/16″	3′ 10 1/4″	17′ 6″	163000 "
90′ 0″	233.0	2′ 3 5/16″	3′ 10 3/8″	17′ 6″	180000 "
95′ 0″	246.0	2′ 3 9/16″	3′ 10 3/8″	17′ 6″	200000 "
100′ 0″	260.0	2′ 3 7/8″	3′ 10 1/2″	17′ 6″	222000 "
110′ 0″	280.0	2′ 4 1/2″	3′ 10 1/2″	17′ 6″	250000 "

NOTE. — W = Total Wt. of one single-track span with two Light Girders.

Span	Wt. of One Light Girder	Wt. of One Heavy Girder	Wt. of One Floor
30′ 0″ to 50′ 0″	0.22 W	0.39 W	0.56 W
55′ 0″ to 80′ 0″	0.27 W	0.48 W	0.47 W
85′ 0″ to 110′ 0″	0.31 W	0.57 W	0.38 W
I Beams 18″-65 lbs.			

Compiled by Chas. Chandler, Illinois Central R. R. Co.

TABLE 41

THROUGH PLATE GIRDER SPANS

STRINGER FLOOR

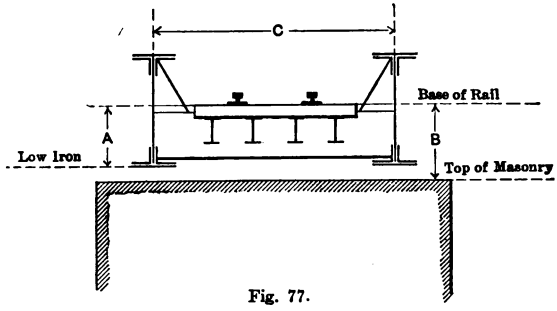

Fig. 77.

Shear in Thousands of Pounds per Rail. Loading, 2-188.5-ton Engines followed by 6000 Pounds per Linear Foot Uniform Load

Span	Total E. S.	*A*	*B*	*C*	Wt. of Span
30′ 0″	64.0	3′ 2 7/8″	3′ 3 5/16″	15′ 6″	45000 lbs.
35′ 0″	79.0	3′ 3 3/16″	3′ 3 5/16″	16′ 6″	56000 "
40′ 0″	86.0	3′ 3 5/16″	3′ 3 5/16″	17′ 6″	64000 "
45′ 0″	100.0	3′ 3 9/16″	3′ 3 7/16″	17′ 6″	71000 "
50′ 0″	109.0	3′ 3 5/8″	3′ 3 7/16″	17′ 6″	81200 "
55′ 0″	124.0	3′ 4 1/8″	3′ 10 3/4″	17′ 6″	95900 "
60′ 0″	132.0	3′ 4 1/8″	3′ 10 3/4″	17′ 6″	103800 "
65′ 0″	144.0	3′ 4 1/2″	3′ 10 15/16″	17′ 6″	116000 "
70′ 0″	153.0	3′ 4 9/16″	3′ 10 15/16″	17′ 6″	128000 "
75′ 0″	169.0	3′ 4 3/16″	4′ 11 9/16″	17′ 6″	145700 "
80′ 0″	178.0	3′ 4 1/4″	4′ 11 9/16″	17′ 6″	154200 "
85′ 0″	195.0	3′ 4 7/16″	4′ 11 5/8″	17′ 6″	176000 "
90′ 0″	206.0	3′ 4 11/16″	4′ 11 5/8″	17′ 6″	189600 "
95′ 0″	222.0	3′ 4 15/16″	4′ 11 3/4″	17′ 6″	210000 "
100′ 0″	233.0	3′ 5 3/16″	4′ 11 3/4″	17′ 6″	224800 "
110′ 0″	262.0	3′ 5 13/16″	4′ 11 3/4″	17′ 6″	263000 "

NOTE. — W = Weight of one single-track span with two Light Girders.

Span	Wt. of One Light Girder	Wt. of One Heavy Girder	Wt. of One Floor
30′ 00″ to 50′ 00″	0.24 W	0.42 W	0.54 W
55′ 00″ to 80′ 00″	0.25 W	0.46 W	0.50 W
85′ 00″ to 110′ 00″	0.28 W	0.51 W	0.43 W

Compiled by Chas. Chandler, Illinois Central R. R. Co.

TABLE 42

CURVES OF CONTENTS OF ABUTMENTS

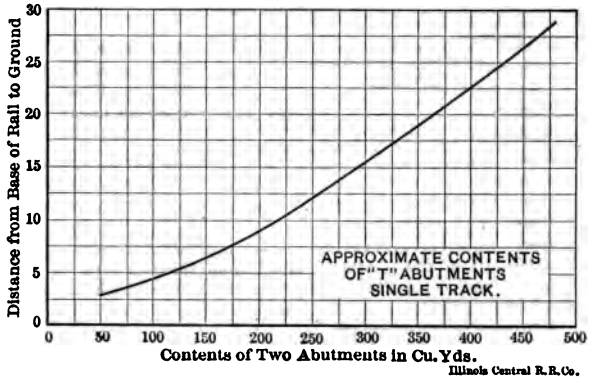

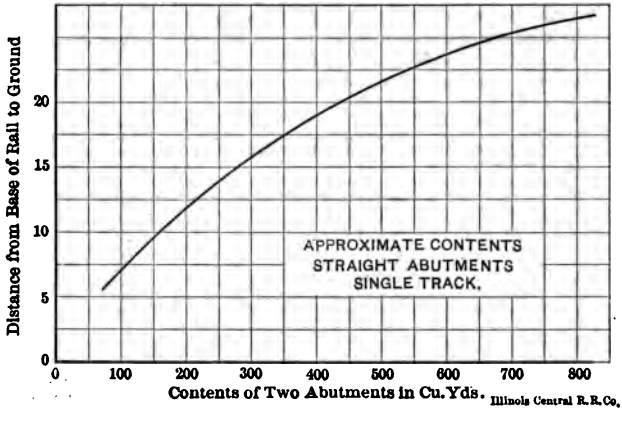

TABLE 43

COST CURVES TIMBER TRESTLES

Unit Prices

Material in Place

Creosoted Material:	
Caps	$55.00 per M. Ft. B.M.
Stringers	55.00 per M. Ft. B.M.
Other material	43.00 per M. Ft. B.M.
Piles	0.37 per linear foot.
Untreated Material:	
Caps	$42.00 per M. Ft. B.M.
Stringers	42.00 per M. Ft. B.M.
Other Material	30.00 per M. Ft. B.M.
Piles	0.24 per M. Ft. B.M.
Iron	0.05 per pound.

To the cost of the trestle obtained from the following curves by multiplying the cost per foot by the length *ADD* for single track.

$25.00 for two bulkheads in all cases.

0.70 per linear foot for ties and ballast for ballast floors only. For double track,

$50.00 for two bulkheads in all cases.

1.40 per linear foot for ties and ballast for ballast floors only.

Creosoted open deck trestles have piles, caps and braces creosoted.

Ballast floor trestles have all material creosoted.

The cost per linear foot given by the following curves does NOT include longitudinal bracing. This should be figured separately for each trestle as the conditions at the opening require.

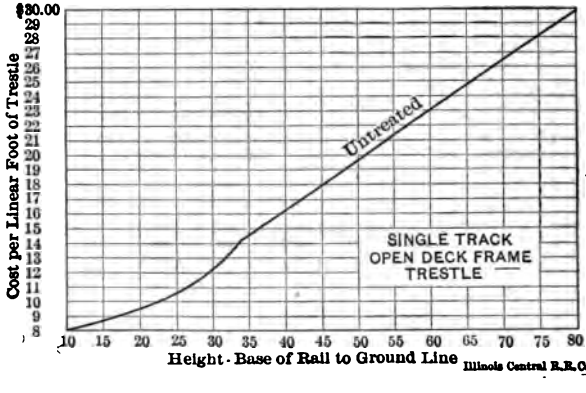

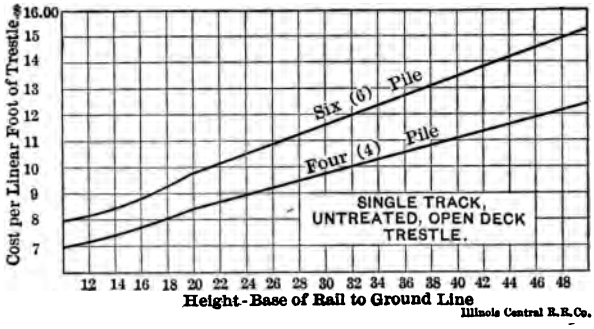
Cost per Linear Foot of Trestle
$16.00
15
14
13
12
11
10
9
8
7
Six (6) Pile
Four (4) Pile
SINGLE TRACK,
UNTREATED, OPEN DECK
TRESTLE.
12 14 16 18 20 22 24 26 28 30 32 34 36 38 40 42 44 46 48
Height-Base of Rail to Ground Line
Illinois Central R.R.Co.

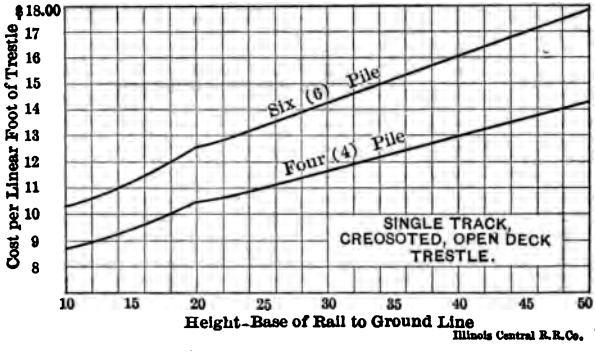
Cost per Linear Foot of Trestle
$18.00
17
16
15
14
13
12
11
10
9
8
Six (6) Pile
Four (4) Pile
SINGLE TRACK,
CREOSOTED, OPEN DECK
TRESTLE.
10 15 20 25 30 35 40 45 50
Height-Base of Rail to Ground Line
Illinois Central R.R.Co.

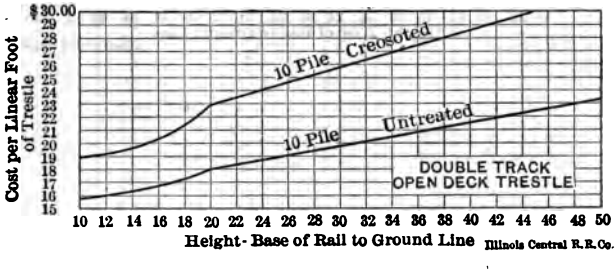
Cost per Linear Foot of Trestle
$30.00
29
28
27
26
25
24
23
22
21
20
19
18
17
16
15
10 Pile Creosoted
10 Pile Untreated
DOUBLE TRACK
OPEN DECK TRESTLE
10 12 14 16 18 20 22 24 26 28 30 32 34 36 38 40 42 44 46 48 50
Height-Base of Rail to Ground Line
Illinois Central R.R.Co.

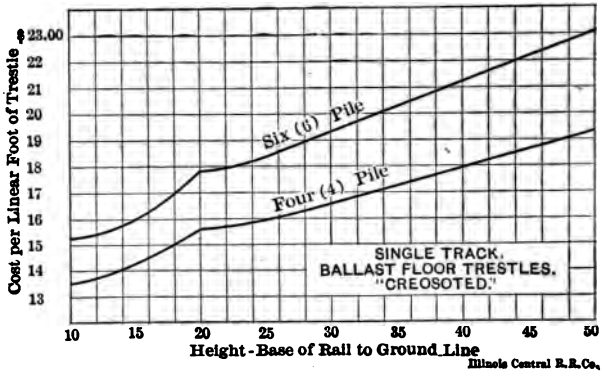
Cost per Linear Foot of Trestle
$23.00
22
21
20
19
18
17
16
15
14
13
Six (6) Pile
Four (4) Pile
SINGLE TRACK,
BALLAST FLOOR TRESTLES,
"CREOSOTED."
10
15
20
25
30
35
40
45
50
Height - Base of Rail to Ground Line
Illinois Central R.R.Co.

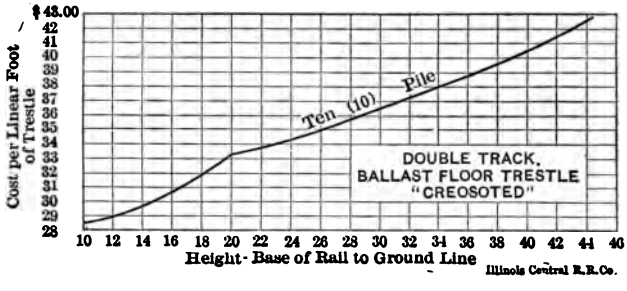
Cost per Linear Foot of Trestle
$43.00
42
41
40
39
38
37
36
35
34
33
32
31
30
29
28
Ten (10) Pile
DOUBLE TRACK,
BALLAST FLOOR TRESTLE
"CREOSOTED"
10 12 14 16 18 20 22 24 26 28 30 32 34 36 38 40 42 44 46
Height - Base of Rail to Ground Line
Illinois Central R.R.Co.

TABLE 44

A = Amount of Compound Interest; C = Unity = 1 or 100%;

I = Interest; P = Principal = $(A - I)$; $r = \frac{\text{rate of interest}}{100} = 0.04$

Life	$C(1+r)^n$	$C[(1+r)^n - 1]$	$C\frac{(1+r)^n}{(1+r)^n-1}$	$Cr\frac{(1+r)^n}{(1+r)^n-1}$	$C' = C\frac{(1+r)^n}{(1+r)^n-1} \times \frac{(1+r)^{n'}-1}{(1+r)^{n'}}$ Equivalent Cost 4%								
N	A	I	Capt'l'n	Ann'l C	5	6	7	8	9	10	11	12	13
5	1.21665	0.21665	5.61575	0.22473	1.0000	0.8492	0.7417	0.6612	0.5987	0.5489	0.5082	0.4743	0.4458
6	1.26532	0.26532	4.76903	0.19076	1.1775	1.0000	0.8734	0.7786	0.7050	0.6463	0.5984	0.5586	0.5250
7	1.31593	0.31593	4.16526	0.16661	1.3482	1.1450	1.0000	0.8915	0.8072	0.7400	0.6851	0.6395	0.6011
8	1.36857	0.36857	3.71318	0.14853	1.5124	1.2844	1.1217	1.0000	0.9055	0.8301	0.7685	0.7174	0.6742
9	1.42331	0.42331	3.36234	0.13449	1.6702	1.4184	1.2388	1.1043	1.0000	0.9167	0.8487	0.7923	0.7446
10	1.48024	0.48024	3.08230	0.12329	1.8219	1.5472	1.3513	1.2047	1.0909	1.0000	0.9259	0.8642	0.8123
11	1.53945	0.53945	2.85374	0.11415	1.9679	1.6711	1.4596	1.3012	1.1782	1.0801	1.0000	0.9334	0.8773
12	1.60103	0.60103	2.66381	0.10655	2.1082	1.7903	1.5636	1.3939	1.2622	1.1571	1.0713	1.0000	0.9399
13	1.66507	0.66507	2.50360	0.10014	2.2431	1.9049	1.6637	1.4831	1.3430	1.2311	1.1399	1.0640	1.0000
14	1.73167	0.73167	2.36674	0.09467	2.3728	2.0150	1.7599	1.5689	1.4207	1.3023	1.2058	1.1255	1.0578
15	1.80094	0.80094	2.24854	0.08994	2.4975	2.1209	1.8524	1.6514	1.4953	1.3708	1.2692	1.1847	1.1134
16	1.87297	0.87297	2.14553	0.08582	2.6174	2.2228	1.9414	1.7307	1.5671	1.4366	1.3301	1.2416	1.1669
17	1.94790	0.94790	2.05496	0.08220	2.7328	2.3207	2.0269	1.8069	1.6362	1.4999	1.3887	1.2963	1.2183
18	2.02581	1.02581	1.97484	0.07899	2.8436	2.4149	2.1092	1.8802	1.7026	1.5608	1.4450	1.3489	1.2677
19	2.10685	1.10685	1.90346	0.07614	2.9503	2.5055	2.1883	1.9508	1.7664	1.6193	1.4992	1.3995	1.3153
20	2.19112	1.19112	1.83955	0.07358	3.0528	2.5925	2.2643	2.0185	1.8278	1.6756	1.5513	1.4481	1.3610
21	2.27876	1.27876	1.78201	0.07128	3.1514	2.6762	2.3374	2.0837	1.8869	1.7297	1.6014	1.4948	1.4049
22	2.36991	1.36991	1.72998	0.06920	3.2461	2.7567	2.4077	2.1464	1.9436	1.7817	1.6496	1.5398	1.4472
23	2.46471	1.46471	1.68273	0.06731	3.3373	2.8341	2.4753	2.2066	1.9981	1.8317	1.6959	1.5830	1.4878
24	2.56330	1.56330	1.63967	0.06559	3.4249	2.9085	2.5403	2.2646	2.0506	1.8798	1.7404	1.6246	1.5269
25	2.66583	1.66583	1.60030	0.06401	3.5092	2.9801	2.6028	2.3203	2.1011	1.9261	1.7833	1.6646	1.5645

TABLE 44 — *Continued*

Life	$C'=C\frac{(1+r)^n}{(1+r)^n-1}\times\frac{(1+r)^{n'}-1}{(1+r)^{n'}}$ Equivalent Cost											4%
N	14	15	16	17	18	19	20	21	22	23	24	25
5	0.4214	0.4004	0.3821	0.3659	0.3517	0.3390	0.3276	0.3173	0.3081	0.2996	0.2920	0.2850
6	0.4963	0.4715	0.4499	0.4309	0.4141	0.3991	0.3857	0.3737	0.3628	0.3528	0.3438	0.3356
7	0.5682	0.5398	0.5151	0.4934	0.4741	0.4570	0.4416	0.4278	0.4153	0.4040	0.3937	0.3842
8	0.6374	0.6056	0.5778	0.5534	0.5318	0.5126	0.4954	0.4799	0.4659	0.4532	0.4416	0.4310
9	0.7039	0.6687	0.6381	0.6112	0.5873	0.5661	0.5471	0.5300	0.5145	0.5005	0.4877	0.4759
10	0.7678	0.7295	0.6961	0.6667	0.6407	0.6171	0.5968	0.5781	0.5613	0.5459	0.5320	0.5192
11	0.8293	0.7879	0.7518	0.7201	0.6920	0.6670	0.6446	0.6244	0.6062	0.5897	0.5746	0.5608
12	0.8885	0.8441	0.8054	0.7714	0.7414	0.7146	0.6906	0.6690	0.6494	0.6317	0.6155	0.6008
13	0.9453	0.8981	0.8570	0.8208	0.7888	0.7603	0.7348	0.7118	0.6910	0.6721	0.6549	0.6392
14	**1.0000**	0.9501	0.9065	0.8683	0.8344	0.8042	0.7772	0.7529	0.7310	0.7110	0.6928	0.6762
15	1.0526	**1.0000**	0.9542	0.9139	0.8783	0.8465	0.8181	0.7925	0.7694	0.7484	0.7292	0.7117
16	1.1031	1.0480	**1.0000**	0.9578	0.9204	0.8872	0.8574	0.8306	0.8063	0.7843	0.7642	0.7459
17	1.1517	1.0942	1.0441	**1.0000**	0.9610	0.9263	0.8952	0.8672	0.8419	0.8189	0.7979	0.7788
18	1.1984	1.1386	1.0864	1.0406	**1.0000**	0.9639	0.9315	0.9024	0.8760	0.8524	0.8303	0.8103
19	1.2434	1.1813	1.1272	1.0796	1.0375	**1.0000**	0.9664	0.9362	0.9089	0.8840	0.8614	0.8407
20	1.2866	1.2223	1.1663	1.1171	1.0735	1.0348	**1.0000**	0.9687	0.9404	0.9148	0.8913	0.8699
21	1.3281	1.2618	1.2040	1.1531	1.1082	1.0682	1.0323	**1.0000**	0.9708	0.9443	0.9222	0.8980
22	1.3681	1.2997	1.2402	1.1879	1.1415	1.1003	1.0633	1.0301	**1.0000**	0.9727	0.9478	0.9250
23	1.4065	1.3362	1.2750	1.2212	1.1736	1.1312	1.0932	1.0590	1.0281	**1.0000**	0.9744	0.9510
24	1.4434	1.3713	1.3085	1.2533	1.2044	1.1609	1.1219	1.0843	1.0551	1.0263	**1.0000**	0.9760
25	1.4789	1.4051	1.3407	1.2841	1.2340	1.1894	1.1495	1.1135	1.0810	1.0515	1.0246	**1.0000**

TABLE 44A

A = Amount at Compound Interest; C = Unity = 1 or 100%;

I = Interest; P = Principal = $(A - I)$; $r = \frac{\text{rate of interest}}{100} = 0.05$

Life	$C(1+r)^n$	$C[(1+r)^n-1]$	$C\frac{(1+r)^n}{(1+r)^n-1}$	$Cr\frac{(1+r)^n}{(1+r)^n-1}$	$C' = C\frac{(1+r)^n}{(1+r)^n-1} \times \frac{(1+r)^{n'}-1}{(1+r)^{n'}}$ Equivalent Cost 5%								
N	Amount	Interest	Capt'l'n	Ann'l C	5	6	7	8	9	10	11	12	13
5	1.27628	0.27628	4.61952	0.23098	**1.0000**	0.8530	0.7482	0.6699	0.6091	0.5607	0.5212	0.4885	0.4609
6	1.34009	0.34009	3.94041	0.19702	1.1723	**1.0000**	0.8772	0.7853	0.7141	0.6573	0.6110	0.5727	0.5403
7	1.40710	0.40710	3.45640	0.17282	1.3365	1.1400	**1.0000**	0.8953	0.8141	0.7494	0.6966	0.6529	0.6160
8	1.47745	0.47745	3.09447	0.15472	1.4928	1.2734	1.1170	**1.0000**	0.9093	0.8370	0.7781	0.7292	0.6880
9	1.55132	0.55132	2.81384	0.14069	1.6417	1.4004	1.2284	1.0997	**1.0000**	0.9205	0.8577	0.8019	0.7567
10	1.62889	0.62889	2.59011	0.12951	1.7835	1.5213	1.3345	1.1947	1.0864	**1.0000**	0.9296	0.8712	0.8220
11	1.71034	0.71034	2.40778	0.12039	1.9186	1.6365	1.4355	1.2852	1.1686	1.0757	**1.0000**	0.9372	0.8843
12	1.79585	0.79585	2.25653	0.11283	2.0472	1.7462	1.5317	1.3713	1.2470	1.1478	1.0670	**1.0000**	0.9435
13	1.88564	0.88564	2.12914	0.10646	2.1697	1.8507	1.6234	1.4534	1.3216	1.2165	1.1309	1.0598	**1.0000**
14	1.97993	0.97993	2.02048	0.10102	2.2863	1.9502	1.7107	1.5316	1.3927	1.2819	1.1917	1.1168	1.0538
15	2.07892	1.07892	1.92686	0.09634	2.3974	2.0450	1.7938	1.6060	1.4602	1.3442	1.2496	1.1711	1.1050
16	2.18287	1.18287	1.84541	0.09227	2.5033	2.1353	1.8730	1.6769	1.5248	1.4035	1.3047	1.2228	1.1538
17	2.29202	1.29202	1.77402	0.08870	2.6040	2.2212	1.9483	1.7443	1.5861	1.4600	1.3572	1.2720	1.2002
18	2.40662	1.40662	1.71092	0.08555	2.7000	2.3031	2.0202	1.8087	1.6446	1.5139	1.4073	1.3189	1.2444
19	2.52695	1.52695	1.65490	0.08275	2.7914	2.3811	2.0886	1.8699	1.7003	1.5651	1.4549	1.3635	1.2866
20	2.65330	1.65330	1.60485	0.08024	2.8785	2.4553	2.1537	1.9282	1.7534	1.6139	1.5003	1.4061	1.3267
21	2.78596	1.78596	1.55992	0.07780	2.9614	2.5260	2.2157	1.9837	1.8038	1.6604	1.5435	1.4466	1.3649
22	2.92526	1.92526	1.51941	0.07597	3.0403	2.5934	2.2748	2.0366	1.8519	1.7047	1.5847	1.4851	1.4013
23	3.07152	2.07152	1.48274	0.07414	3.1155	2.6575	2.3311	2.0870	1.8977	1.7468	1.6239	1.5219	1.4359
24	3.22510	2.22510	1.44942	0.07247	3.1872	2.7186	2.3847	2.1350	1.9414	1.7870	1.6612	1.5568	1.4690
25	3.38635	2.38635	1.41905	0.07095	3.2554	2.7768	2.4357	2.1807	1.9829	1.8252	1.6967	1.5902	1.5004

TABLE 44A — *Continued*

Life	$C' = C\frac{(1+r)^n}{(1+r)^n-1} \times \frac{(1+r)^{n'}-1}{(1+r)^{n'}}$ Equivalent Cost											5%
N	14	15	16	17	18	19	20	21	22	23	24	25
5	0.4374	0.4171	0.3995	0.3840	0.3704	0.3582	0.3474	0.3377	0.3289	0.3210	0.3138	0.3072
6	0.5128	0.4890	0.4683	0.4502	0.4342	0.4200	0.4073	0.3959	0.3856	0.3763	0.3678	0.3601
7	0.5846	0.5575	0.5339	0.5133	0.4950	0.4788	0.4643	0.4513	0.4396	0.4290	0.4193	0.4106
8	0.6529	0.6227	0.5964	0.5733	0.5529	0.5348	0.5186	0.5041	0.4910	0.4792	0.4684	0.4586
9	0.7181	0.6848	0.6558	0.6305	0.6080	0.5881	0.5703	0.5544	0.5400	0.5269	0.5151	0.5043
10	0.7801	0.7439	0.7125	0.6849	0.6606	0.6389	0.6196	0.6023	0.5866	0.5725	0.5596	0.5479
11	0.8391	0.8003	0.7664	0.7368	0.7106	0.6873	0.6665	0.6479	0.6310	0.6158	0.6020	0.5894
12	0.8954	0.8539	0.8178	0.7862	0.7582	0.7334	0.7112	0.6913	0.6733	0.6571	0.6423	0.6289
13	0.9490	0.9050	0.8667	0.8332	0.8036	0.7773	0.7538	0.7327	0.7136	0.6964	0.6808	0.6665
14	1.0000	0.9537	0.9133	0.8780	0.8468	0.8191	0.7943	0.7721	0.7520	0.7339	0.7174	0.7023
15	1.0486	1.0000	0.9577	0.9207	0.8879	0.8589	0.8329	0.8096	0.7885	0.7695	0.7522	0.7365
16	1.0949	1.0441	1.0000	0.9613	0.9271	0.8968	0.8696	0.8453	0.8233	0.8035	0.7854	0.7690
17	1.1389	1.0862	1.0403	1.0000	0.9644	0.9329	0.9046	0.8793	0.8565	0.8358	0.8170	0.7999
18	1.1809	1.1262	1.0786	1.0367	1.0000	0.9673	0.9380	0.9117	0.8881	0.8666	0.8472	0.8294
19	1.2209	1.1643	1.1151	1.0720	1.0339	1.0000	0.9698	0.9426	0.9181	0.8960	0.8758	0.8575
20	1.2590	1.2006	1.1499	1.1054	1.0661	1.0312	1.0000	0.9720	0.9468	0.9239	0.9031	0.8842
21	1.2950	1.2352	1.1830	1.1372	1.0968	1.0609	1.0288	1.0000	0.9740	0.9505	0.9292	0.9097
22	1.3298	1.2682	1.2146	1.1676	1.1260	1.0892	1.0562	1.0267	1.0000	0.9759	0.9539	0.9339
23	1.3627	1.2995	1.2446	1.1964	1.1539	1.1161	1.0824	1.0521	1.0247	1.0000	0.9775	0.9570
24	1.3940	1.3294	1.2732	1.2240	1.1804	1.1418	1.1072	1.0762	1.0483	1.0230	1.0000	0.9790
25	1.4238	1.3579	1.3004	1.2530	1.2057	1.1662	1.1309	1.0993	1.0707	1.0449	1.0214	1.0000

TABLE 45

Velocity Heads in Feet for Various Velocities in Miles per Hour

Formula: $h = 0.035\ V^2$

From "Elements of Railroad Engineering," by Wm. G. Raymond

Velocity	0.0	0.1	0.2	0.3	0.4	0.5	0.6	0.7	0.8	0.9
0	0.00	0.00	0.00	0.00	0.01	0.01	0.01	0.02	0.02	0.03
1	0.03	0.04	0.05	0.06	0.07	0.08	0.09	0.10	0.11	0.13
2	0.14	0.15	0.17	0.19	0.20	0.22	0.24	0.26	0.27	0.29
3	0.31	0.34	0.36	0.38	0.40	0.43	0.45	0.48	0.51	0.53
4	0.56	0.59	0.62	0.65	0.68	0.71	0.74	0.77	0.81	0.84
5	0.87	0.91	0.95	0.98	1.02	1.06	1.10	1.14	1.18	1.22
6	1.26	1.30	1.35	1.39	1.43	1.48	1.52	1.57	1.62	1.67
7	1.72	1.76	1.81	1.87	1.92	1.97	2.02	2.08	2.13	2.18
8	2.24	2.30	2.35	2.41	2.47	2.53	2.59	2.65	2.71	2.77
9	2.84	2.90	2.96	3.03	3.09	3.16	3.23	3.29	3.36	3.43
10	3.50	3.57	3.64	3.71	3.79	3.86	3.93	4.01	4.08	4.16
11	4.24	4.30	4.39	4.47	4.52	4.63	4.71	4.79	4.87	4.96
12	5.04	5.12	5.21	5.29	5.38	5.47	5.56	5.65	5.73	5.82
13	5.91	6.01	6.10	6.19	6.28	6.38	6.47	6.57	6.66	6.76
14	6.86	6.96	7.06	7.16	7.26	7.36	7.46	7.56	7.67	7.77
15	7.87	7.98	8.09	8.19	8.30	8.41	8.52	8.63	8.74	8.85
16	8.96	9.07	9.18	9.30	9.41	9.53	9.64	9.76	9.88	10.00
17	10.11	10.23	10.35	10.47	10.60	10.72	10.84	10.97	11.09	11.21
18	11.34	11.47	11.59	11.72	11.85	11.98	12.11	12.24	12.37	12.50
19	12.64	12.77	12.90	13.04	13.17	13.31	13.45	13.58	13.72	13.86
20	14.00	14.14	14.28	14.42	14.57	14.71	14.85	15.00	15.14	15.29
21	15.44	15.58	15.73	15.88	16.03	16.18	16.33	16.48	16.63	16.79
22	16.94	17.10	17.25	17.41	17.50	17.72	17.88	18.03	18.19	18.35
23	18.52	18.68	18.84	19.00	19.17	19.33	19.50	19.66	19.82	19.99
24	20.16	20.33	20.50	20.07	20.84	21.01	21.18	21.35	21.53	21.70
25	21.88	22.05	22.22	22.40	22.58	22.76	22.94	23.12	23.30	23.48
26	23.66	23.84	24.03	24.21	24.40	24.58	24.77	24.95	25.14	25.33
27	25.52	25.70	25.90	26.09	26.28	26.47	26.66	26.86	27.05	27.25
28	27.44	27.64	27.83	28.03	28.23	28.43	28.63	28.83	29.03	29.23
29	29.44	29.64	29.84	30.05	30.25	30.46	30.67	30.88	31.08	31.29
30	31.50	31.71	31.92	32.13	32.35	32.56	32.78	32.98	33.20	33.42
31	33.64	33.85	34.07	34.29	34.51	34.73	34.96	35.18	35.40	35.62
32	35.84	36.06	36.29	36.52	36.74	36.97	37.19	37.42	37.65	37.88
33	38.11	38.34	38.58	38.81	39.05	39.27	39.51	39.75	39.98	40.22
34	40.46	40.70	40.94	41.18	41.42	41.66	41.90	42.14	42.38	42.63
35	42.87	43.12	43.37	43.61	43.86	44.11	44.36	44.61	44.86	45.11
36	45.36	45.61	45.87	46.12	46.38	46.63	46.88	47.14	47.40	47.66
37	47.91	48.18	48.43	48.70	48.96	49.22	49.48	49.74	50.01	50.28
38	50.54	50.81	51.08	51.34	51.61	51.88	52.16	52.42	52.69	52.96
39	53.24	53.51	53.78	54.06	54.34	54.61	54.89	55.17	55.44	55.72
	0.0	**1.0**	**2.0**	**3.0**	**4.0**	**5.0**	**6.0**	**7.0**	**8.0**	**9.0**
40	56.00	58.84	61.74	64.72	67.76	70.88	74.06	77.32	80.64	84.03
50	87.50	91.03	94.64	98.31	102.06	105.77	109.75	113.72	117.74	121.83
60	126.00	130.23	134.54	138.94	143.36	147.87	152.45	157.11	161.84	166.63
70	171.50	176.45	181.44	186.52	191.65	196.88	202.16	207.52	212.94	218.42
80	224.00	229.60	235.33	241.10	246.95	257.88	258.84	264.91	271.04	277.22
90	283.50	289.82	296.23	302.70	309.25	315.86	322.55	329.31	336.15	343.05
100	350.00									

NOTE. — For this Table the theoretical velocity heads have been increased 4.63 per cent to allow for the energy of the rotating wheels.

TABLE 46

GENERAL GEOMETRIC PROBLEMS

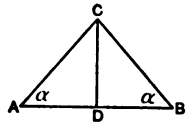

Fig. 78.

Fig. 78. The straight line CD meets the straight line AB at D.
When $\measuredangle ADC = \measuredangle BDC$,
then $\measuredangle ADC = \measuredangle BDC = 90°$,
CD is $\perp$ to AB,
CD is the shortest distance from C to the line AB.
When $AD = DB$,
then $AC = BC$,
$\measuredangle \alpha = \measuredangle \alpha$.
Any point in CD is equidistant from A and B,
and $\triangle ABC$ is an isosceles triangle.

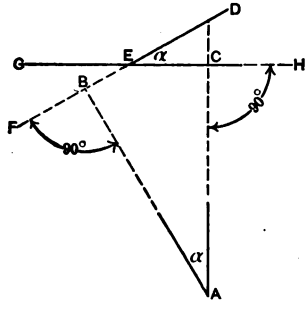

Fig. 79.

Fig. 79. The straight line DF intersects the straight line GH at E.
Then $\measuredangle GED + \measuredangle DEH = 180°$ and $\measuredangle GED$ and $\measuredangle DEH$ are supplementary.
$\measuredangle DEH = \measuredangle GEF$,
$\measuredangle GED = \measuredangle FEH$.
When the sides of one angle are $\perp$ to the sides of another angle, the angles are either equal or supplementary. AB is $\perp$ to FD and AC is $\perp$ to GH,
then $\measuredangle BAC = \measuredangle DEH = \measuredangle GEF$,
$= 180° - \measuredangle GED = 180° - \measuredangle FEH$.

Fig. 80. Of two angles lying in the same plane the sides are said to lie in the same direction when they are on the same side of a line joining the vertexes of the angles.

When the sides of two angles are ∥ and

(1) in the same direction,

(2) the sides of one are in one direction and the sides of the other are in the opposite direction,

then the angles are equal.

(3) Both sides of one and one side of the other are in the same direction and the remaining side in the opposite direction,

then the angles are supplementary.

(1) $\measuredangle ABC = \measuredangle DEF$ (Fig. 80).
$\measuredangle KIJ = \measuredangle KLJ$ (Fig. 81).

(2) $\measuredangle GLF = \measuredangle CIJ$ (Fig. 81).

(3) $\measuredangle ABC = 180° - \measuredangle GED$ (Fig. 80).

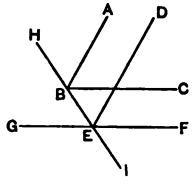

Fig. 80.

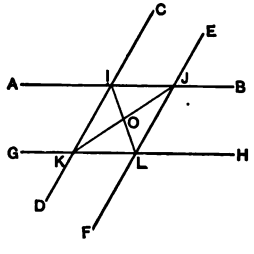

Fig. 81.

Fig. 81. Parallel lines are lines in the same plane, everywhere equidistant and which can never meet however far extended.

AB is ∥ to GH,
DC is ∥ to FE.

When parallels intersect parallels,

then $IJ = KL$ and $IK = JL$,

$\measuredangle AIC = \measuredangle AJE = \measuredangle KIB = \measuredangle LJB = \measuredangle GKC = \measuredangle GLE$
$= \measuredangle DKH = \measuredangle FLH$

$\measuredangle CIB = \measuredangle EJB = \measuredangle AIK = \measuredangle CKH$, etc.

Figure $IJLK$ is a parallelogram.

$$IO = OL \text{ and } KO = OJ.$$

Area = Any side × ⊥ between it and side opposite.

$$\overline{KL}^2 + \overline{LJ}^2 = \frac{\overline{KJ}^2 + \overline{IL}^2}{2}.$$

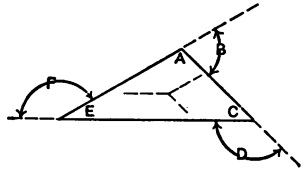

Fig. 82.

Fig. 82. In any triangle

$$\measuredangle A + \measuredangle C + \measuredangle E = 180°,$$
$$\measuredangle A + \measuredangle B = \measuredangle C + \measuredangle D = \measuredangle E + \measuredangle F = 180,$$
$$\measuredangle B = \measuredangle C + \measuredangle E,$$
$$\measuredangle D = \measuredangle A + \measuredangle E,$$
$$\measuredangle F = \measuredangle A + \measuredangle C.$$

Area = One-half the produce of any side and the $\perp$ upon it from the vertex of the angle opposite.

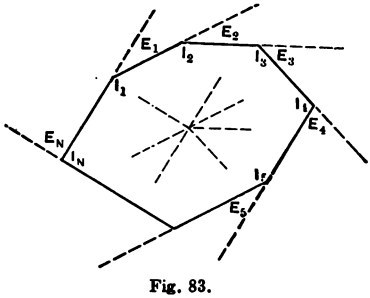

Fig. 83.

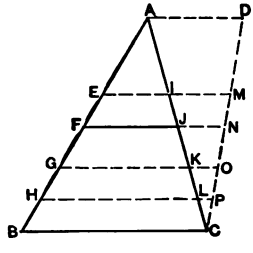

Fig. 84.

Fig. 83. In any polygon the sum of any interior angle and the adjacent exterior angle is 180°.

When N = number of sides of the polygon, I an interior angle and E an exterior angle taken in order,

then $(I_1 + I_2 + I_3 + \ldots I_N) = 180° (N - 2)$,

$(E_1 + E_2 + E_3 + \ldots E_N) = 360°$.

Area; The polygon may be divided into a series of triangles, or a series of triangles and trapezoids the sum of the areas of which equals the area of the polygon.

Fig. 84. When ABC = any triangle, FJ is $\parallel$ to BC and $CJ = JA$, then $BF = FA$.

When $ADBC$ = any trapezoid, FN is $\parallel$ to BC and $CN = ND$, then $BF = FA$.

Area $= \dfrac{AD + BC}{2} = FN$ multiplied by $\perp$ distance AD to BC.

In general,

When two straight lines BA and CA are intersected by any number of parallels,

$$\text{then } \frac{AE}{AI} = \frac{EF}{IJ} = \frac{AF}{AJ} = \frac{FG}{JK} = \frac{AG}{AK} = \frac{GH}{KL} = \frac{AH}{AL} = \frac{HB}{LC}, \text{ etc.,}$$

$$\frac{EF}{IJ} = \frac{FG}{JK} = \frac{GH}{KL} = \frac{HB}{LC} = \frac{EG}{IK} = \frac{FH}{JL}, \text{ etc.}$$

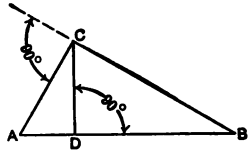

Fig. 85.

Fig. 85. Two polygons are similar when they are mutually equiangular and their similarly situated sides are proportional.

When $\measuredangle ACB = \measuredangle ADC = \measuredangle CDB = 90°$,

then $\triangle ADC$, $\triangle CDB$ and $\triangle ACB$ are similar.

$$\overline{CD}^2 = \overline{AD} \times \overline{BD},$$
$$\overline{AC}^2 = \overline{AB} \times \overline{AD},$$
$$\overline{CB}^2 = \overline{AB} \times \overline{DB},$$
$$\frac{\overline{AC}^2}{\overline{BC}^2} = \frac{\overline{AD}}{\overline{DB}}.$$

Any triangle whose sides are in the ratio of 3 : 4 : 5 is a right triangle.

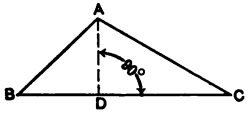

Fig. 86.

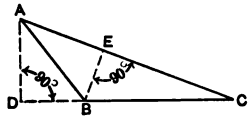

Fig. 87.

Fig. 86. $\overline{AB}^2 = \overline{BC}^2 + \overline{AC}^2 - 2\,\overline{BC} \times \overline{DC}$. (Figs. 86 and 87.)

$\overline{AC}^2 = \overline{AB}^2 + \overline{BC}^2 - 2\,\overline{BC} \times \overline{BD}$. (Fig. 86.)

Fig. 87. $\overline{AC}^2 = \overline{AB}^2 + \overline{BC}^2 + 2\,\overline{BC} \times \overline{DB}$. (Fig. 87.)

$\overline{BC}^2 = \overline{AB}^2 + \overline{AC}^2 - 2\,\overline{AC} \times \overline{AE}$. (Fig. 87.)

Fig. 88. When $AD = BD$,

then $\overline{CA}^2 + \overline{CB}^2 = 2\,(\overline{AD}^2 + \overline{CD}^2)$,

$\overline{CA}^2 - \overline{CB}^2 = 2 \cdot \overline{AB} \cdot \overline{DE}$.

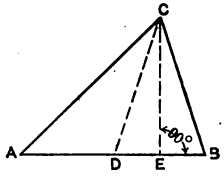

Fig. 88.

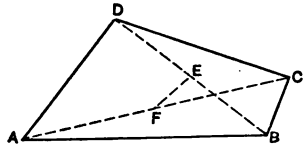

Fig. 89.

Fig. 89. When $ABCD$ is any quadrilateral and $\overline{DE} = \overline{EB}$, and $\overline{AF} = \overline{FC}$,

then $\overline{AB}^2 + \overline{BC}^2 + \overline{CD}^2 + \overline{DA}^2 = \overline{AC}^2 + \overline{BD}^2 + 4\,\overline{EF}$.

When $ABCD$ is a parallelogram (rhomboid or rhombus),

then $\overline{AB}^2 + \overline{BC}^2 = \dfrac{\overline{AC}^2 + \overline{BD}^2}{2}$.

When $ABCD$ is a rectangle,

then $\overline{AB}^2 + \overline{BC}^2 = \overline{AC}^2 = \overline{BD}^2$.

When $ABCD$ is a square,

then $\overline{AB} = \dfrac{\overline{AC}}{\sqrt{2}}$.

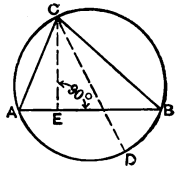

Fig. 90.

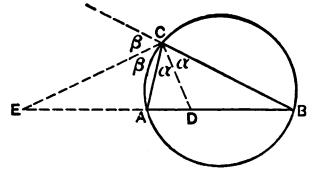

Fig. 91.

Fig. 90. When ABC is any inscribed triangle, CD a diameter of the inscribing circle and CE is $\perp$ to AB,

then $\overline{AC} \times \overline{CB} = \overline{CD} \times \overline{CE}$.

Fig. 91. When ABC is any triangle, CD the bisector of an interior angle, and CE the bisector of the corresponding exterior angle,

then,

$$\overline{AD} : \overline{DB} :: \overline{AC} : \overline{CB},$$
$$\overline{EA} : \overline{EB} :: \overline{AC} : \overline{CB},$$
$$\overline{AD} : \overline{DB} :: \overline{EA} : \overline{EB},$$
$$\overline{AC} \times \overline{CB} = \overline{AD} \times \overline{DB} + \overline{CD}^2,$$
$$\overline{AC} \times \overline{CB} = \overline{EA} \times \overline{EB} - \overline{EC}^2.$$

Areas of similar polygons are to each other as the square of similarly located sides.

Through any three points, not in the same straight line, a circle can be passed and but one.

Circumferences of circles are to each other as their radii.

Areas of circles are to each other as the squares of their radii.

In the same or in equal circles, equal angles at the center subtend equal arcs; equal arcs subtend equal chords and conversely.

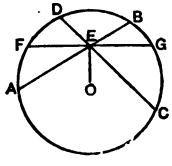

Fig. 92.

Fig. 92. When AB and DC are any two chords of the circle $AFDBGC$ passing through the point E,

then $\overline{AE} \times \overline{EB} = \overline{DE} \times \overline{EC}$.

When EO is a line joining E and the center of the circle FG is the chord through $E \perp$ to EO,

then FG is $\perp$ to the diameter which passes through E.

$\overline{FG}$ is bisected at E, i.e., $\overline{FE} = \overline{EG}$,

$\overline{FG}$ is the least chord through E,

$\overline{FE}^2 = \overline{AE} \times \overline{EB} = \overline{DE} \times \overline{EC}$.

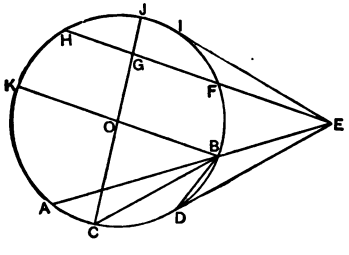

Fig. 93.

Fig. 93. When HE and AE are any two secants drawn through any fixed point E without a circle, and IE is a tangent to the circle,

then $\overline{AE} \times \overline{BE} = \overline{HE} \times \overline{FE} = \overline{IE}^2$.

When $\overline{HF}$ and $\overline{KB}$ are any two $\parallel$ chords or any two $\parallel$ lines intersecting a circle,

then arc $\overline{KH}$ = arc $\overline{FB}$.

When O is the center of a circle,
then arc $\overline{COB}$ is the measure of $\measuredangle COB$.

When KB, AB, CB, and DB are any chords intersecting at the point B on the circumference,
then $\frac{1}{2}$ arc $\overline{KA}$ is the measure of $\measuredangle KBA$,
$\frac{1}{2}$ arc KAC is the measure of $\measuredangle KBC$,
$\frac{1}{2}$ arc AC is the measure of $\measuredangle ABC$, etc.

All angles inscribed within the same circle terminating in the same chord and lying on the same side of the chord are equal.

When the given chord is a diameter, then all angles inscribed in the circle and terminating in the diameter are right angles.

When HE and AE are any two secants meeting without the circle,
then $\frac{1}{2}$ (arc $\overline{HKA}$ − arc $\overline{FB}$) is the measure of $\measuredangle HEA$.

When DE is a tangent and AE a secant intersecting at E,
then $\frac{1}{2}$ (arc $\overline{ACD}$ − arc $\overline{DB}$) is the measure of $\measuredangle AED$.

When DE is a tangent and DB a chord intersecting the tangent at D,
then $\frac{1}{2}$ arc $\overline{DB}$ is the measure of $\measuredangle BDE$.

When CJ and HF are any two chords intersecting at any point G within the circle,
then $\frac{1}{2}$ (arc $\overline{HJ}$ + arc $\overline{CDBF}$) is the measure of $\measuredangle HGJ$ and $\measuredangle CGF$,
$\frac{1}{2}$ (arc $\overline{HKAC}$ + arc $\overline{FIJ}$) is the measure of $\measuredangle HGC$ and $\measuredangle JGF$.

When IE and DE are any two tangents intersecting at E,
then $\frac{1}{2}$ (arc $\overline{IJHKACD}$ − arc $\overline{DBFI}$) is the measure of $\measuredangle IED$.

TABLE 47

GENERAL TRIGONOMETRIC FORMULÆ

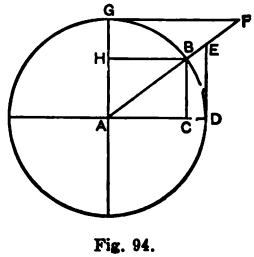

Fig. 94.

Fig. 94. In Fig. 94, $AG = AB = AD = R = 1$, $\measuredangle GAD = 90°$, GF and HB are ∥ to AD, CB and BE are ∥ to AG, and $\measuredangle BAC = \alpha$.

$$\sin\alpha = \overline{CB}, \qquad \operatorname{cosec}\alpha = \overline{AF},$$
$$\cos\alpha = \overline{AC}, \qquad \operatorname{vers}\alpha = \overline{CD},$$
$$\tan\alpha = \overline{DE}, \qquad \operatorname{covers}\alpha = \overline{HG},$$
$$\cot\alpha = \overline{GF}, \qquad \operatorname{exsec}\alpha = \overline{BE},$$
$$\sec\alpha = \overline{AE}, \qquad \operatorname{coexsec}\alpha = \overline{BF}.$$

α	$\alpha+90$	$\alpha-90$	$90-\alpha$	$\alpha+180$	$\alpha-180$	$180-\alpha$
sin	−cos	cos	cos	−sin	−sin	sin
cos	sin	−sin	sin	−cos	−cos	−cos
tan	−cot	−cot	cot	tan	tan	−tan
cot	−tan	−tan	tan	cot	cot	−cot
sec	cosec	−cosec	cosec	−sec	−sec	−sec
cosec	−sec	sec	sec	−cosec	−cosec	cosec

Example: $\sin\alpha = -\cos(\alpha+90) = \cos(\alpha-90) = \cos(90-\alpha) = -\sin(\alpha+180)$, etc.

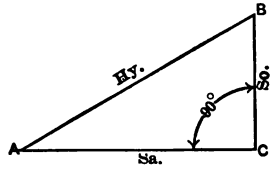

Fig. 95.

Fig. 95. In Fig. 95 let $\triangle ABC$ be any right triangle, let So and Sa be the sides about the right angle, let So be the *side opposite* and Sa the *side adjacent* to either acute angle and let Hy be the hypothenuse, then,

$$\sin = \frac{So}{Hy}, \qquad \operatorname{cosec} = \frac{Hy}{So} = \frac{1}{\sin},$$
$$\cos = \frac{Sa}{Hy}, \qquad \operatorname{vers} = \frac{Hy - Sa}{Hy} = 1 - \cos,$$
$$\tan = \frac{So}{Sa} = \frac{\sin}{\cos} = \frac{1}{\cot}, \qquad \operatorname{covers} = \frac{Hy - So}{Hy} = 1 - \sin,$$
$$\cot = \frac{Sa}{So} = \frac{\cos}{\sin} = \frac{1}{\tan}, \qquad \operatorname{exsec} = \frac{Hy - Sa}{Sa} = \sec - 1,$$
$$\sec = \frac{Hy}{Sa} = \frac{1}{\cos}, \qquad \operatorname{coexsec} = \frac{Hy - So}{So} = \operatorname{cosec} - 1.$$

from which follows

$$\sin \cdot \operatorname{cosec} = 1, \qquad \sin^2 = 1 - \cos^2,$$
$$\cos \cdot \sec = 1, \qquad \cos^2 = 1 - \sin^2,$$
$$\tan \cdot \cot = 1, \qquad \tan^2 = \sec^2 - 1,$$
$$\sin^2 + \cos^2 = 1, \qquad \cot^2 = \operatorname{cosec}^2 - 1,$$
$$\sec^2 - \tan^2 = 1, \qquad \sec^2 = 1 + \tan^2,$$
$$\operatorname{cosec}^2 - \cot^2 = 1, \qquad \operatorname{cosec}^2 = 1 + \cot^2.$$

IN GENERAL

$$\sin\alpha = \sqrt{1-\cos^2\alpha} = \sqrt{(1+\cos\alpha)(1-\cos\alpha)} = \cos\alpha\tan\alpha = \frac{\cos\alpha}{\cot\alpha}$$

$$= \frac{\tan\alpha}{\sec\alpha} = \frac{1}{\operatorname{cosec}\alpha} = \frac{\tan\alpha}{\sqrt{1+\tan^2\alpha}} = \frac{1}{\sqrt{1+\cot^2\alpha}} = \frac{\sqrt{\sec^2\alpha-1}}{\sec\alpha}$$

$$= \sqrt{\tfrac{1}{2}(1-\cos 2\alpha)} = 2\sin\tfrac{1}{2}\alpha\cos\tfrac{1}{2}\alpha = \frac{2\tan\frac{1}{2}\alpha}{1+\tan^2\frac{1}{2}\alpha} = \frac{1}{\cot\frac{1}{2}\alpha-\cot\alpha}$$

$$= \frac{1}{\tan\frac{1}{2}\alpha+\cot\alpha} = \frac{2}{\tan\frac{1}{2}\alpha+\cot\frac{1}{2}\alpha}.$$

$$\cos\alpha = \sqrt{1-\sin^2\alpha} = \sqrt{(1+\sin\alpha)(1-\sin\alpha)} = \sin\alpha\cot\alpha = \frac{\sin\alpha}{\tan\alpha}$$

$$= \frac{\cot\alpha}{\operatorname{cosec}\alpha} = \frac{1}{\sec\alpha} = \frac{\cot\alpha}{\sqrt{1+\cot^2\alpha}} = \frac{1}{\sqrt{1+\tan^2\alpha}} = \frac{\sqrt{\operatorname{cosec}^2\alpha-1}}{\operatorname{cosec}\alpha}$$

$$= \sqrt{\tfrac{1}{2}(1+\cos 2\alpha)} = \frac{\sin 2\alpha}{2\sin\alpha} = \cos^2\tfrac{1}{2}\alpha - \sin^2\tfrac{1}{2}\alpha = 1 - 2\sin^2\tfrac{1}{2}\alpha$$

$$= 2\cos^2\tfrac{1}{2}\alpha - 1 = \frac{1-\tan^2\frac{1}{2}\alpha}{1+\tan^2\frac{1}{2}\alpha} = \frac{\cot^2\frac{1}{2}\alpha-1}{\cot^2\frac{1}{2}\alpha+1} = \frac{\cot\frac{1}{2}\alpha-\tan\frac{1}{2}\alpha}{\cot\frac{1}{2}\alpha+\tan\frac{1}{2}\alpha}$$

$$= \frac{1}{\tan\alpha\cot\frac{1}{2}\alpha-1} = \frac{1}{1+\tan\alpha\tan\frac{1}{2}\alpha} = \cos^4\tfrac{1}{2}\alpha - \sin^4\tfrac{1}{2}\alpha.$$

$$\tan\alpha = \frac{\sin\alpha}{\cos\alpha} = \frac{1}{\cot\alpha} = \sqrt{\sec^2\alpha-1} = \frac{1}{\sqrt{\operatorname{cosec}^2\alpha-1}} = \frac{\sin\alpha}{\sqrt{1-\sin^2\alpha}}$$

$$= \frac{\sqrt{1-\cos^2\alpha}}{\cos\alpha} = \sqrt{\frac{1-\cos 2\alpha}{1+\cos 2\alpha}} = \frac{\sin 2\alpha}{1+\cos 2\alpha} = \frac{1-\cos 2\alpha}{\sin 2\alpha}$$

$$= \operatorname{cosec} 2\alpha - \cot 2\alpha = \cot\alpha - 2\cot 2\alpha = \frac{2\tan\frac{1}{2}\alpha}{1-\tan^2\frac{1}{2}\alpha} = \frac{2\cot\frac{1}{2}\alpha}{\cot^2\frac{1}{2}\alpha-1}$$

$$= \frac{2}{\cot\frac{1}{2}\alpha-\tan\frac{1}{2}\alpha}.$$

Expressions for $\cot\alpha$, $\sec\alpha$, and $\operatorname{cosec}\alpha$ are the reciprocals of those given above for $\tan\alpha$, $\cos\alpha$, and $\sin\alpha$ respectively.

$\sin(\alpha\pm\beta) = \sin\alpha\cos\beta \pm \cos\alpha\sin\beta.$
$\cos(\alpha\pm\beta) = \cos\alpha\cos\beta \mp \sin\alpha\sin\beta.$

$$\tan(\alpha\pm\beta) = \frac{\tan\alpha\pm\tan\beta}{1\mp\tan\alpha\tan\beta}.$$

$$\cot(\alpha\pm\beta) = \frac{\cot\beta\cot\alpha\mp 1}{\cot\beta\pm\cot\alpha}.$$

$\sin\alpha\cos\beta = \frac{1}{2}\sin(\alpha+\beta) + \frac{1}{2}\sin(\alpha-\beta).$
$\cos\alpha\sin\beta = \frac{1}{2}\sin(\alpha+\beta) - \frac{1}{2}\sin(\alpha-\beta).$
$\sin\alpha\sin\beta = \frac{1}{2}\cos(\alpha-\beta) - \frac{1}{2}\cos(\alpha+\beta).$
$\cos\alpha\cos\beta = \frac{1}{2}\cos(\alpha-\beta) + \frac{1}{2}\cos(\alpha+\beta).$
$\sin(\alpha+\beta)\sin(\alpha-\beta) = \sin^2\alpha - \sin^2\beta = \cos^2\beta - \cos^2\alpha.$
$\cos(\alpha+\beta)\cos(\alpha-\beta) = \cos^2\alpha - \sin^2\beta = \cos^2\beta - \sin^2\alpha.$
$\sin\alpha + \sin\beta = 2\sin\frac{1}{2}(\alpha+\beta)\cos\frac{1}{2}(\alpha-\beta).$
$\sin\alpha - \sin\beta = 2\cos\frac{1}{2}(\alpha+\beta)\sin\frac{1}{2}(\alpha-\beta).$
$\cos\alpha + \cos\beta = 2\cos\frac{1}{2}(\alpha+\beta)\cos\frac{1}{2}(\alpha-\beta).$
$\cos\alpha - \cos\beta = -2\sin\frac{1}{2}(\alpha+\beta)\sin\frac{1}{2}(\alpha-\beta).$

$$\tan\alpha \pm \tan\beta = \frac{\sin(\alpha \pm \beta)}{\cos\alpha\cos\beta}.$$

$$\cot\beta \pm \cot\alpha = \frac{\sin(\alpha \pm \beta)}{\sin\alpha\sin\beta}.$$

$$\cot\beta \pm \tan\alpha = \frac{\cos(\alpha \mp \beta)}{\cos\alpha\sin\beta}.$$

$$\sec^2\alpha + \operatorname{cosec}^2\alpha = \sec^2\alpha\operatorname{cosec}^2\alpha.$$

$$\sin 2a = 2\sin\alpha\cos\alpha = (\sin\alpha + \cos\alpha)^2 - 1 = 1 - (\sin\alpha - \cos\alpha)^2.$$

$$\cos 2\alpha = 2\cos^2\alpha - 1 = 1 - 2\sin^2\alpha.$$

$$\tan 2\alpha = \frac{2\tan\alpha}{1 - \tan^2\alpha}.$$

$$\cot 2\alpha = \frac{\cot^2\alpha - 1}{2\cot\alpha} = \frac{1 - \tan^2\alpha}{2\tan\alpha} = \frac{\cot\alpha - \tan\alpha}{2}.$$

$$\sec 2\alpha = \frac{\sec^2\alpha}{1 - \tan^2\alpha} = \frac{\cot\alpha + \tan\alpha}{\cot\alpha - \tan\alpha}.$$

$$\operatorname{cosec} 2\alpha = \tfrac{1}{2}\sec\alpha\cos\alpha = \tfrac{1}{2}(\tan\alpha + \cot\alpha).$$

$$1 = \sin^2\tfrac{1}{2}\alpha + \cos^2\tfrac{1}{2}\alpha,$$

$$\sin\alpha = 2\sin\tfrac{1}{2}\alpha\cos\tfrac{1}{2}\alpha.$$

$$\cos\alpha = \cos^2\tfrac{1}{2}\alpha - \sin^2\tfrac{1}{2}\alpha.$$

$$1 + \sin\alpha = (\sin\tfrac{1}{2}\alpha + \cos\tfrac{1}{2}\alpha)^2.$$

$$1 - \sin\alpha = (\sin\tfrac{1}{2}\alpha - \cos\tfrac{1}{2}\alpha)^2.$$

$$1 + \cos\alpha = 2\cos^2\tfrac{1}{2}\alpha.$$

$$1 - \cos\alpha = 2\sin^2\tfrac{1}{2}\alpha.$$

$$\sin\tfrac{1}{2}\alpha = \sqrt{\tfrac{1}{2}(1 - \cos\alpha)} = \tfrac{1}{2}\sqrt{1 + \sin\alpha} - \tfrac{1}{2}\sqrt{1 - \sin\alpha}.$$

$$\cos\tfrac{1}{2}\alpha = \sqrt{\tfrac{1}{2}(1 + \cos\alpha)} = \tfrac{1}{2}\sqrt{1 + \sin\alpha} + \tfrac{1}{2}\sqrt{1 - \sin\alpha}.$$

$$\tan\tfrac{1}{2}\alpha = \sqrt{\frac{1 - \cos\alpha}{1 + \cos\alpha}} = \frac{1 - \cos\alpha}{\sin\alpha} = \frac{\sin\alpha}{1 + \cos\alpha} = \frac{1 + \sin\alpha - \cos\alpha}{1 + \sin\alpha + \cos\alpha}.$$

$$\cot\tfrac{1}{2}\alpha = \sqrt{\frac{1 + \cos\alpha}{1 - \cos\alpha}} = \frac{1 + \cos\alpha}{\sin\alpha} = \frac{\sin\alpha}{1 - \cos\alpha} = \frac{1 + \sin\alpha + \cos\alpha}{1 + \sin\alpha - \cos\alpha}.$$

$$\sec\tfrac{1}{2}\alpha = \sqrt{\frac{2\sec\alpha}{\sec\alpha + 1}}.$$

$$\operatorname{cosec}\tfrac{1}{2}\alpha = \sqrt{\frac{2\sec\alpha}{\sec\alpha - 1}}.$$

TABLE 48

GENERAL PROPERTIES OF TRIANGLES

Right Triangles

Fig. 96.

$$a = c\sin\alpha = b\tan\alpha = c\cos\beta = b\cot\beta = \sqrt{c^2 - b^2} = \sqrt{(c+b)(c-b)}.$$

$$b = c\cos\alpha = a\cot\alpha = c\sin\beta = a\tan\beta = \sqrt{c^2 - a^2} = \sqrt{(c+a)(c-a)}.$$

$$c = \frac{a}{\sin\alpha} = \frac{b}{\cos\alpha} = a\operatorname{cosec}\alpha = b\sec\alpha = \frac{b}{\sin\beta} = \frac{a}{\cos\beta} = b\operatorname{cosec}\beta$$
$$= a\sec\beta = \sqrt{a^2 + b^2}.$$

$$\text{Area} = \frac{bc\sin\alpha}{2} = \frac{ac\cos\alpha}{2} = \frac{b^2\tan\alpha}{2} = \frac{a^2\cot\alpha}{2}, \text{ etc.}$$

$$= \frac{ac\sin\beta}{2} = \frac{bc\cos\beta}{2} = \frac{a^2\tan\beta}{2} = \frac{b^2\cot\beta}{2}, \text{ etc.}$$

$$= \frac{ab}{2} = \frac{a\sqrt{(c+a)(c-a)}}{2} = \frac{b\sqrt{(c+b)(c-b)}}{2}.$$

When α and β are near 0° and 90° the use of functions of angles near 0° may be avoided for $(90° - \alpha) = \beta$ and $(90° - \beta) = \alpha$. The use of functions of angles near 90° may be avoided by the following formulas.

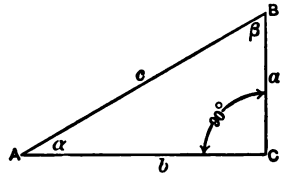

Fig. 96.

$$\sin \tfrac{1}{2}\alpha = \sqrt{\frac{c-b}{2c}}, \qquad \sin \tfrac{1}{2}\beta = \sqrt{\frac{c-a}{2c}},$$

$$\cos \tfrac{1}{2}\alpha = \sqrt{\frac{c+b}{2c}}, \qquad \cos \tfrac{1}{2}\beta = \sqrt{\frac{c+a}{2c}},$$

$$\tan \tfrac{1}{2}\alpha = \sqrt{\frac{c-b}{c+b}}, \qquad \tan \tfrac{1}{2}\beta = \sqrt{\frac{c-a}{c+a}},$$

$$\cot \tfrac{1}{2}\alpha = \sqrt{\frac{c+b}{c-b}}, \qquad \cot \tfrac{1}{2}\beta = \sqrt{\frac{c+a}{c-a}}.$$

IN GENERAL

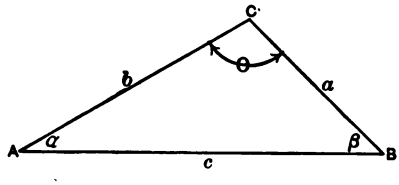

Fig. 97.

Fig. 97.

$$a = b\cos\theta + c\cos\beta.$$
$$b = c\cos\alpha + a\cos\theta,$$
$$c = a\cos\beta + b\cos\alpha.$$

$$\frac{a}{\sin\alpha} = \frac{b}{\sin\beta} = \frac{c}{\sin\theta}.$$

$$a^2 = b^2 + c^2 - 2\,bc\cos\alpha.$$
$$b^2 = c^2 + a^2 - 2\,ca\cos\beta.$$
$$c^2 = a^2 + b^2 - 2\,ab\cos\theta.$$

$$\frac{a+b}{a-b} = \frac{\tan\frac{1}{2}(\alpha+\beta)}{\tan\frac{1}{2}(\alpha-\beta)} = \frac{\tan\frac{1}{2}(180-\theta)}{\tan\frac{1}{2}(\alpha-\beta)} = \frac{\tan\left(90-\frac{\theta}{2}\right)}{\tan\frac{1}{2}(\alpha-\beta)} = \frac{\cot\frac{1}{2}\theta}{\tan\frac{1}{2}(\alpha-\beta)}.$$

$$\frac{b+c}{b-c} = \frac{\tan\frac{1}{2}(\beta+\theta)}{\tan\frac{1}{2}(\beta-\theta)} = \frac{\cot\frac{1}{2}\alpha}{\tan\frac{1}{2}(\beta-\theta)}.$$

$$\frac{c+a}{c-a} = \frac{\tan\frac{1}{2}(\theta+\alpha)}{\tan\frac{1}{2}(\theta-\alpha)} = \frac{\cot\frac{1}{2}\beta}{\tan\frac{1}{2}(\theta-\alpha)}.$$

$s =$ One-half the sum of the sides of the triangle.

$s = \frac{1}{2}(a + b + c)$.

$s - a = \frac{1}{2}(-a + b + c)$.

$s - b = \frac{1}{2}(a - b + c)$.

$s - c = \frac{1}{2}(a + b - c)$.

$$\sin\tfrac{1}{2}\alpha = \sqrt{\frac{(s-b)(s-c)}{bc}}, \qquad \cos\tfrac{1}{2}\alpha = \sqrt{\frac{s(s-a)}{bc}},$$

$$\sin\tfrac{1}{2}\beta = \sqrt{\frac{(s-c)(s-a)}{ca}}, \qquad \cos\tfrac{1}{2}\beta = \sqrt{\frac{s(s-b)}{ca}},$$

$$\sin\tfrac{1}{2}\theta = \sqrt{\frac{(s-a)(s-b)}{ab}}, \qquad \cos\tfrac{1}{2}\theta = \sqrt{\frac{s(s-c)}{ab}}.$$

$r =$ Radius of the circle inscribed in the triangle.

$$r = \sqrt{\frac{(s-a)(s-b)(s-c)}{s}} = s\tan\tfrac{1}{2}\alpha\tan\tfrac{1}{2}\beta\tan\tfrac{1}{2}\theta$$

$$= \frac{a\sin\frac{1}{2}\beta\sin\frac{1}{2}\theta}{\cos\frac{1}{2}\alpha} = \frac{b\sin\frac{1}{2}\theta\sin\frac{1}{2}\alpha}{\cos\frac{1}{2}\beta} = \frac{c\sin\frac{1}{2}\alpha\sin\frac{1}{2}\beta}{\cos\frac{1}{2}\theta} = \frac{T}{s}.$$

$$\tan\tfrac{1}{2}\alpha = \sqrt{\frac{(s-b)(s-c)}{s(s-a)}} = \frac{r}{s-a}.$$

$$\tan\tfrac{1}{2}\beta = \sqrt{\frac{(s-c)(s-a)}{s(s-b)}} = \frac{r}{s-b}.$$

$$\tan\tfrac{1}{2}\theta = \sqrt{\frac{(s-a)(s-b)}{s(s-c)}} = \frac{r}{s-c}.$$

$$\sin\alpha = \frac{2}{bc}\sqrt{s(s-a)(s-b)(s-c)} = \frac{2sr}{bc} = \frac{2T}{bc}.$$

$$\sin\beta = \frac{2}{ca}\sqrt{s(s-a)(s-b)(s-c)} = \frac{2sr}{ca} = \frac{2T}{ca}.$$

$$\sin\theta = \frac{2}{ab}\sqrt{s(s-a)(s-b)(s-c)} = \frac{2sr}{ab} = \frac{2T}{ab}.$$

$T =$ area of the triangle.

$$T = sr = \sqrt{s(s-a)(s-b)(s-c)} = \frac{a^2\sin\beta\sin\theta}{\sin\alpha} = \frac{b^2\sin\theta\sin\alpha}{\sin\beta}$$

$$= \frac{c^2\sin\alpha\sin\beta}{\sin\theta} = \frac{bc\sin\alpha}{2} = \frac{ca\sin\beta}{2} = \frac{ab\sin\theta}{2}.$$

$r_c =$ Radius of circle circumscribed about the triangle.

$$r_c = \frac{abc}{4T}.$$

The radii of the escribed circles are

$r_{E_a} =$ radius of circle tangent to side a and to sides b and c produced

$$r_{E_a} = \frac{T}{s-a}, \quad r_{E_b} = \frac{T}{s-b} \quad \text{and} \quad r_{E_c} = \frac{T}{s-c}.$$

TABLE 49

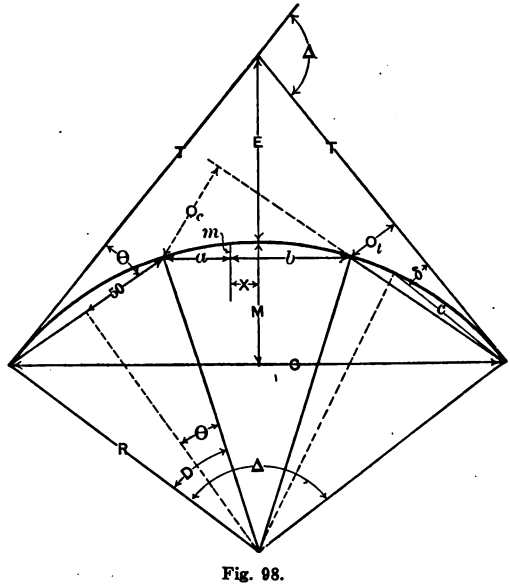

Fig. 98.

SIMPLE CURVE FORMULAS

Exact	Approximate
$\sin \frac{1}{2} D = \frac{50}{R}, \quad D = 2\theta,$	$D = \frac{5730}{R} = \frac{T_1}{T} = \frac{E_1}{E} = \frac{100\,\Delta}{L}.$
$R = \frac{50}{\sin \frac{1}{2} D} = \frac{T}{\tan \frac{1}{2} \Delta}$	$R = \frac{5730}{D} = \frac{C^2}{8\,M}.$
$= T \cot \frac{1}{2} \Delta = \frac{E}{\text{exsec}\, \frac{1}{2} \Delta}$	
$= E \frac{\cos \frac{1}{2} \Delta}{\text{vers}\, \frac{1}{2} \Delta}.$	
$T = \frac{E}{\tan \frac{1}{2} \Delta} = E \cot \frac{1}{2} \Delta = R \tan \frac{1}{2} \Delta.$	$T = \frac{T_1}{D}.$
$E = T \tan \frac{1}{2} \Delta = R\, \text{exsec}\, \frac{1}{2} \Delta$	$E = \frac{E_1}{D}.$
$= \frac{M}{\cos \frac{1}{2} \Delta} = M \sec \frac{1}{2} \Delta.$	
$M = E \cos \frac{1}{2} \Delta = R\, \text{vers}\, \frac{1}{2} \Delta$	$M = \frac{C^2}{8\,R}.$
$= R - \sqrt{R^2 - \left(\frac{C}{2}\right)^2}.$	

Any ordinate, $m = \sqrt{(R-x)^2} - \sqrt{R^2 - \left(\frac{C}{2}\right)^2}.$ $\quad m = \frac{ab}{2\,R}.$

$$L - C = \frac{R\Delta}{57.3} - C.$$

$$O_t = 200 \cdot \sin \tfrac{1}{2} D.$$

$$\theta = \frac{D}{2} \cdot \quad \delta = \frac{c\theta}{100}.$$

$$O_c = 200 \cdot \sin \tfrac{1}{2} D.$$

$$L - C = \frac{8 M^2}{3 C}.$$

$O_t = \frac{7}{8} N^2 D$ (N = number of stations from origin).

$$O = \frac{O_1 D}{D_1}.$$

TABLE 50

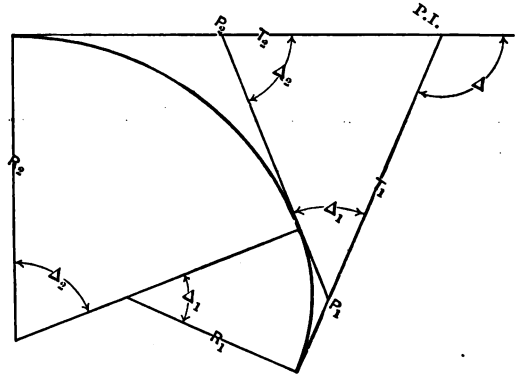

Fig. 99.

COMPOUND CURVE FORMULAS

Given	To find	Formulas
$\Delta_1\Delta_2$,	Δ.	$\Delta_1 + \Delta_2 = \Delta$.
$\Delta_1\Delta_2R_1R_2$,	P_1P_2.	$P_1P_2 = R_1 \tan\frac{1}{2}\Delta_1 + R_2 \tan\frac{1}{2}\Delta_2$.
$T_1R_1R_2\Delta$,	$T_2\Delta_2\Delta_1$.	$\text{vers}\,\Delta_2 = \dfrac{T_1 \sin\Delta - R_1\,\text{vers}\,\Delta}{R_2 - R_1}$.
		$T_2 = (R_2 - R_1)\sin\Delta_2 + R_1 \sin\Delta - T_1\cos\Delta$.
$T_1R_1\Delta_1\Delta$,	$T_2R_2\Delta_2$.	$R_2 - R_1 = \dfrac{T_1 \sin\Delta - R_1\,\text{vers}\,\Delta}{\text{vers}\,\Delta_2}$.
		$T_2 = (R_2 - R_1)\sin\Delta_2 + R_1\sin\Delta - T_1\cos\Delta$.
$T_2T_1R_1\Delta$,	$R_2\Delta_2\Delta_1$.	$\tan\frac{1}{2}\Delta_2 = \dfrac{T_1\sin\Delta - R_1\,\text{vers}\,\Delta}{T_2 + T_1\cos\Delta - R_1\sin\Delta}$.
		$R_2 - R_1 = \dfrac{T_2 + T_1\cos\Delta - R_1\sin\Delta}{\sin\Delta_2}$.
$T_2R_2R_1\Delta$,	$T_1\Delta_2\Delta_1$.	$\text{vers}\,\Delta_1 = \dfrac{R_2\,\text{vers}\,\Delta - T_2\sin\Delta}{R_2 - R_1}$.
		$T_1 = R_2\sin\Delta - (R_2 - R_1)\sin\Delta_1 - T_2\cos\Delta$.
$T_2R_2\Delta_2\Delta$,	$T_1R_1\Delta_1$.	$R_2 - R_1 = \dfrac{R_2\,\text{vers}\,\Delta - T_2\sin\Delta}{\text{vers}\,\Delta_1}$.
		$T_1 = R_2\sin\Delta - (R_2 - R_1)\sin\Delta_1 - T_2\cos\Delta$.

Given	To find	Formulas
$T_2T_1R_2\Delta$,	$R_1\Delta_2\Delta_1$.	$\tan \frac{1}{2}\Delta_1 = \dfrac{R_2 \operatorname{vers}\Delta - T_2 \sin\Delta}{R_2 \sin\Delta - T_2\cos\Delta - T_1}$. $R_2 - R_1 = \dfrac{R_2 \sin\Delta - T_2\cos\Delta - T_1}{\sin\Delta_1}$.

TABLE 51

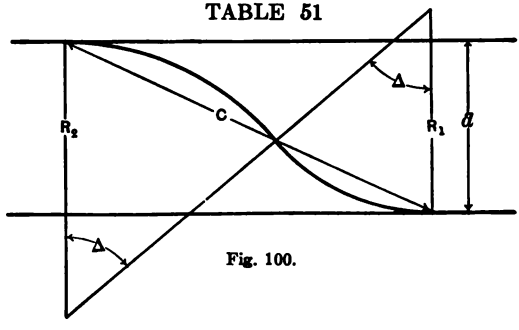

Fig. 100.

REVERSED CURVE FORMULAS

(Parallel Tangents)

When $R_1 \neq R_2$,

$$R_1 + R_2 = \frac{C^2}{2\,d},$$

$$R_1 + R_2 = \frac{d}{\operatorname{vers}\Delta},$$

$$\operatorname{vers}\Delta = \frac{d}{(R_1 + R_2)},$$

$$C = \sqrt{2\,(R_1 + R_2)\,d},$$

$$d = R_1 \operatorname{vers}\Delta + R_2 \operatorname{vers}\Delta.$$

When $R_1 = R_2 = R$,

$$R = \frac{C^2}{4\,d},$$

$$R = \frac{d}{2 \operatorname{vers}\Delta},$$

$$\operatorname{vers}\Delta = \frac{d}{2\,R},$$

$$C = 2\sqrt{Rd}.$$

$$d = 2\,R \operatorname{vers}\Delta.$$

REVERSED CURVES, TANGENTS NOT PARALLEL

In Fig. 101,

When D is fixed, measure x_1 and angle $ABC = \Delta$,

then
$$\operatorname{vers}\phi = \frac{R_1 \operatorname{vers}\Delta + x_1 \sin\Delta}{R_1 + R_2},$$

$$\cos\phi = \frac{R_2 + R_1\cos\Delta - x_1\sin\Delta}{R_1 + R_2}$$

When B is inaccessible, measure $\overline{DE} \perp$ to AB and measure $\measuredangle DEB$ or $\measuredangle O_1EC$,

then $\Delta = 90° - \measuredangle DEB = 90° - \measuredangle O_1EC$.

$$\operatorname{vers}\phi = \frac{R_1 \operatorname{vers}\Delta + \overline{DE}\cos\Delta}{R_1 + R_2} = \frac{\overline{DE} + (R_1 - DE)\operatorname{vers}\Delta}{R_1 + R_2},$$

$$\cos\phi = \frac{R_2 + (R_1 - \overline{DE})\cos\Delta}{R_1 + R_2}.$$

When F is fixed, measure x_2 and $\measuredangle ABC = \Delta$,

then $$\text{vers}\,(\phi + \Delta) = \frac{R_2 \text{ vers } \Delta + x_2 \sin \Delta}{R_1 + R_2},$$

$$\cos\,(\phi + \Delta) = \frac{R_1 + R_2 \cos \Delta - x_2 \sin \Delta}{R_1 + R_2}.$$

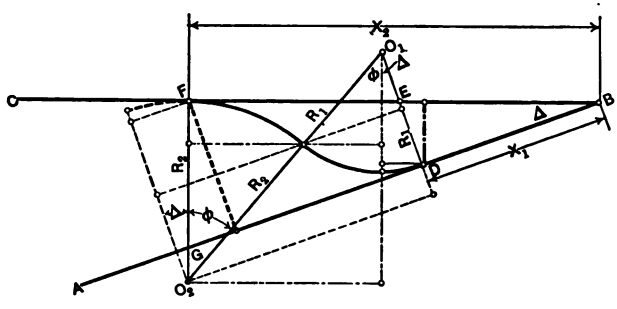

Fig. 101.

When B is inaccessible, measure $\overline{FG} \perp$ to CB and measure $\measuredangle FGB$ or $\measuredangle O_2GA$,

then $$\Delta = 90° - \measuredangle FGB = 90° - \measuredangle O_2GA,$$

$$\text{vers}\,(\phi + \Delta) = \frac{R_2 \text{ vers } \Delta + \overline{FG} \cos \Delta}{R_1 + R_2} = \frac{\overline{FG} + (R_2 - \overline{FG}) \text{ vers } \Delta}{R_1 + R_2},$$

$$\cos\,(\phi + \Delta) = \frac{R_1 + (R_2 - \overline{FG}) \cos \Delta}{R_1 + R_2}.$$

With ϕ and $(\phi + \Delta)$ known any part of either curve may be determined by the formulas of Table 49.

TABLE 52. — *Continued*

RADII

M	10° Curve	11° Curve	12° Curve	13° Curve	14° Curve	15° Curve	16° Curve	17° Curve	18° Curve	19° Curve	M
0	573.686	521.671	478.339	441.684	410.275	383.065	359.265	338.273	319.623	302.943	0
1	572.734	520.885	477.678	441.120	409.790	382.642	358.893	337.945	319.330	302.680	1
2	571.784	520.100	477.018	440.559	409.306	382.220	358.523	337.616	319.037	302.417	2
3	570.839	519.318	476.361	439.999	408.823	381.799	358.153	337.289	318.745	302.155	3
4	569.896	518.539	475.705	439.440	408.341	381.380	357.784	336.962	318.453	301.893	4
5	568.957	517.761	475.052	438.882	407.860	380.961	357.415	336.636	318.162	301.632	5
6	568.020	516.986	474.400	438.326	407.380	380.543	357.048	336.310	317.871	301.371	6
7	567.087	516.214	473.750	437.772	406.902	380.125	356.681	335.985	317.581	301.111	7
8	566.156	515.443	473.102	437.219	406.424	379.709	356.315	335.660	317.292	300.851	8
9	565.229	514.675	472.455	436.667	405.948	379.294	355.950	335.337	317.003	300.592	9
10	564.305	513.909	471.810	436.117	405.473	378.880	355.585	335.013	316.715	300.333	10
11	563.384	513.146	471.167	435.568	404.998	378.466	355.222	334.691	316.427	300.074	11
12	562.466	512.385	470.526	435.020	404.526	378.054	354.859	334.369	316.139	299.816	12
13	561.551	511.626	469.887	434.474	404.055	377.642	354.496	334.048	315.853	299.559	13
14	560.638	510.869	469.249	433.929	403.583	377.231	354.135	333.727	315.566	299.302	14
15	559.729	510.115	468.613	433.385	403.114	376.821	353.774	333.407	315.281	299.045	15
16	558.823	509.363	467.978	432.844	402.645	376.412	353.414	333.088	314.993	298.789	16
17	557.920	508.613	467.346	432.300	402.178	376.004	353.054	332.769	314.711	298.533	17
18	557.019	507.865	466.715	431.764	401.712	375.597	352.696	332.451	314.426	298.278	18
19	556.122	507.120	466.086	431.226	401.246	375.191	352.338	332.133	314.143	298.023	19
20	555.227	506.376	465.459	430.690	400.782	374.786	351.981	331.816	313.860	297.768	20
21	554.336	505.635	464.833	430.154	400.319	374.381	351.625	331.500	313.577	297.514	21
22	553.447	504.896	464.209	429.620	399.857	373.977	351.269	331.184	313.295	297.260	22
23	552.561	504.159	463.586	429.088	399.396	373.575	350.914	330.869	313.013	297.007	23
24	551.678	503.425	462.966	428.557	398.937	373.173	350.560	330.555	312.732	296.755	24
25	550.800	502.692	462.347	428.026	398.478	372.772	350.207	330.241	312.452	296.502	25
26	549.920	501.962	461.729	427.498	398.020	372.372	349.854	329.928	312.172	296.250	26
27	549.046	501.233	461.114	426.971	397.564	371.972	349.502	329.615	311.892	295.999	27
28	548.174	500.507	460.500	426.445	397.108	371.574	349.150	329.303	311.613	295.748	28
29	547.305	499.783	459.887	425.920	396.653	371.176	348.800	328.991	311.335	295.497	29

RADII

M	10° Curve	11° Curve	12° Curve	13° Curve	14° Curve	15° Curve	16° Curve	17° Curve	18° Curve	19° Curve	M
30	546.438	499.061	459.276	425.396	396.200	370.780	348.450	328.689	311.056	295.247	30
31	545.575	498.342	458.667	424.874	395.747	370.384	348.101	328.370	310.779	294.998	31
32	544.714	497.624	458.060	424.354	395.296	369.989	347.752	328.061	310.502	294.748	32
33	543.856	496.908	457.454	423.834	394.841	369.595	347.405	327.751	310.225	294.500	33
34	543.001	496.195	456.850	423.316	394.396	369.202	347.057	327.443	309.949	294.251	34
35	542.148	495.483	456.247	422.799	393.948	368.809	346.711	327.135	309.674	294.003	35
36	541.298	494.774	455.646	422.283	393.501	368.418	346.365	326.828	309.399	293.756	36
37	540.451	494.066	455.047	421.769	393.054	368.027	346.021	326.521	309.124	293.509	37
38	539.606	493.361	454.449	421.256	392.609	367.637	345.676	326.215	308.850	293.262	38
39	538.764	492.657	453.853	420.743	392.165	367.248	345.333	325.909	308.577	293.015	39
40	537.924	491.956	453.259	420.233	391.722	366.859	344.990	325.604	308.303	292.770	40
41	537.088	491.257	452.664	419.723	391.280	366.472	344.647	325.520	308.031	292.524	41
42	536.253	490.559	452.073	419.215	390.838	366.085	344.306	324.996	307.759	292.279	42
43	535.422	489.864	451.482	418.708	390.398	365.691	343.965	324.692	307.487	292.034	43
44	534.593	489.171	450.894	418.203	389.959	365.315	343.625	324.390	307.216	291.790	44
45	533.767	488.479	450.307	417.698	389.521	364.931	343.285	324.088	306.945	291.546	45
46	532.943	487.790	449.722	417.195	389.084	364.547	342.947	323.786	306.675	291.303	46
47	532.120	487.103	449.138	416.693	388.647	364.165	342.609	323.485	306.405	291.060	47
48	531.303	486.417	448.556	416.192	388.212	363.783	342.271	323.184	306.136	290.818	48
49	530.487	485.733	447.975	415.692	387.778	363.402	341.934	322.885	305.868	290.575	49
50	529.673	485.051	447.395	415.194	387.345	363.022	341.598	322.585	305.599	290.334	50
51	528.862	484.372	446.818	414.697	386.912	362.643	341.263	322.287	305.332	290.092	51
52	528.053	483.694	446.241	414.201	386.481	362.264	340.928	321.989	305.064	289.851	52
53	527.247	483.018	445.666	413.706	386.050	361.887	340.594	321.691	304.797	289.611	53
54	526.443	482.344	445.093	413.212	385.621	361.510	340.260	321.394	304.531	289.371	54
55	525.642	481.671	444.521	412.720	385.193	361.134	339.928	321.097	304.265	289.131	55
56	524.843	481.001	443.951	412.229	384.765	360.758	339.595	320.801	304.000	288.892	56
57	524.046	480.333	443.382	411.739	384.339	360.384	339.265	320.506	303.735	288.653	57
58	523.252	479.666	442.814	411.250	383.913	360.010	338.933	320.211	303.470	288.414	58
59	522.461	479.001	442.248	410.762	383.488	359.637	338.603	319.916	303.206	288.176	59

From Engineer's Field Book — Butts

TABLE 53

TANGENTS AND ARCS OF A ONE-DEGREE CURVE

	Δ										
	0°		1°		2°		3°		4°		
M	Tan	Arc	Tan	Arc	Tan	Arc	Tan	Arc	Tan	Arc	M
0	.000000	0.00000	50.0198	100.000	100.040	200.000	150.060	300.000	200.079	400.000	0
1	.830799	1.66667	50.8506	101.667	100.870	201.667	150.890	301.667	200.910	401.667	1
2	1.66160	3.33333	51.6814	103.333	101.701	203.333	151.721	303.333	201.741	403.333	2
3	2.49240	5.00000	52.5122	105.000	102.532	205.000	152.552	305.000	202.572	405.000	3
4	3.32320	6.66667	53.3430	106.667	103.363	206.667	153.383	306.667	203.403	406.667	4
5	4.15400	8.33333	54.1738	108.333	104.194	208.333	154.214	308.333	204.233	408.333	5
6	4.98480	10.0000	55.0046	110.000	105.024	210.000	155.044	310.000	205.064	410.000	6
7	5.81559	11.6667	55.8354	111.667	105.855	211.667	155.875	311.667	205.924	411.667	7
8	6.64639	13.3333	56.6662	113.333	106.686	213.333	156.706	313.333	206.783	413.333	8
9	7.47719	15.0000	57.4970	115.000	107.517	215.000	157.537	315.000	207.614	415.000	9
10	8.30799	16.6667	58.3278	116.667	108.348	216.667	158.368	316.667	208.445	416.667	10
11	9.16744	18.3333	59.1586	118.833	109.178	218.333	159.198	318.333	209.275	418.333	11
12	10.0269	20.0000	59.9894	120.000	110.009	220.000	160.029	320.000	210.106	420.000	12
13	10.8577	21.6667	60.8202	121.667	110.840	221.667	160.860	321.667	210.937	421.667	13
14	11.6885	23.3333	61.6510	123.333	111.671	223.333	161.691	323.333	211.768	423.333	14
15	12.5193	25.0000	62.4818	125.000	112.502	225.000	162.522	325.000	212.599	425.000	15
16	13.3501	26.6667	63.3126	126.667	113.332	226.667	163.352	326.667	213.429	426.667	16
17	14.1809	28.3333	64.1721	128.333	114.163	228.333	164.212	328.333	214.260	428.333	17
18	15.0117	30.0000	65.0315	130.000	114.994	230.000	165.071	330.000	215.091	430.000	18
19	15.8425	31.6667	65.8623	131.667	115.825	231.667	165.902	331.667	215.922	431.667	19
20	16.6733	33.3333	66.6931	133.333	116.656	233.333	166.733	333.333	216.753	433.333	20
21	17.5041	35.0000	67.5239	135.000	117.515	235.000	167.564	335.000	217.583	435.000	21
22	18.3349	36.6667	68.3547	136.667	118.375	236.667	168.394	336.667	218.414	436.667	22
23	19.1657	38.3333	69.1855	138.333	119.205	238.333	169.225	338.333	219.274	438.333	23
24	19.9965	40.0000	70.0163	140.000	120.036	240.000	170.056	340.000	220.133	440.000	24
25	20.8273	41.6667	70.8471	141.667	120.867	241.667	170.887	341.667	220.964	441.667	25
26	21.6581	43.3333	71.6779	143.333	121.698	243.333	171.718	343.333	221.795	443.333	26
27	22.4889	45.0000	72.5087	145.000	122.529	245.000	172.548	345.000	222.626	445.000	27
28	23.3197	46.6667	73.3395	146.667	123.359	246.667	173.379	346.667	223.456	446.667	28
29	24.1505	48.3333	74.1703	148.333	124.190	248.333	174.210	348.333	224.287	448.333	29

TANGENTS AND ARCS OF A ONE-DEGREE CURVE

	Δ										
	0°		1°		2°		3°		4°		
M	Tan	Arc	Tan	Arc	Tan	Arc	Tan	Arc	Tan	Arc	M
30	24.9813	50.0000	75.0011	150.000	125.021	250.000	175.041	350.000	225.118	450.000	30
31	25.8121	51.6667	75.8319	151.667	125.852	251.667	175.872	351.667	225.949	451.667	31
32	26.6429	53.3333	76.6627	153.333	126.683	253.333	176.702	353.333	226.780	453.333	32
33	27.5023	55.0000	77.4935	155.000	127.513	255.000	177.562	355.000	227.610	455.000	33
34	28.3618	56.6667	78.3243	156.667	128.344	256.667	178.421	356.667	228.441	456.667	34
35	29.1926	58.3333	79.1551	158.333	129.175	258.333	179.252	358.333	229.272	458.333	35
36	30.0234	60.0000	79.9859	160.000	130.006	260.000	180.083	360.000	230.103	460.000	36
37	30.8542	61.6667	80.8167	161.667	130.837	261.667	180.914	361.667	230.962	461.667	37
38	31.6850	63.3333	81.6475	163.333	131.667	263.333	181.744	363.333	231.822	463.333	38
39	32.5158	65.0000	82.5070	165.000	132.527	265.000	182.575	365.000	232.652	465.000	39
40	33.3466	66.6667	83.3664	166.667	133.386	266.667	183.406	366.667	233.483	466.667	40
41	34.1774	68.3333	84.1972	168.333	134.217	268.333	184.237	368.333	234.314	468.333	41
42	35.0082	70.0000	85.0280	170.000	135.048	270.000	185.068	370.000	235.145	470.000	42
43	35.8390	71.6667	85.8588	171.667	135.879	271.667	185.898	371.667	235.976	471.667	43
44	36.6698	73.3333	86.6896	173.333	136.709	273.333	186.729	373.333	236.806	473.333	44
45	37.5006	75.0000	87.5204	175.000	137.540	275.000	187.560	375.000	237.637	475.000	45
46	38.3314	76.6667	88.3512	176.667	138.371	276.667	188.391	376.667	238.468	476.667	46
47	39.1622	78.3333	89.1820	178.333	139.202	278.333	189.222	378.333	239.299	478.333	47
48	39.9930	80.0000	90.0128	180.000	140.033	280.000	190.052	380.000	240.130	480.000	48
49	40.8238	81.6667	90.8436	181.667	140.863	281.667	190.883	381.667	240.960	481.667	49
50	41.6546	83.3333	91.6744	183.333	141.694	283.333	191.714	383.333	241.791	483.333	50
51	42.4854	85.0000	92.5052	185.000	142.525	285.000	192.574	385.000	242.651	485.000	51
52	43.3162	86.6667	93.3360	186.667	143.356	286.667	193.433	386.667	243.510	486.667	52
53	44.1470	88.3333	94.1668	188.333	144.187	288.333	194.264	388.333	244.341	488.333	53
54	44.9778	90.0000	94.9976	190.000	145.017	290.000	195.095	390.000	245.172	490.000	54
55	45.8372	91.6667	95.8284	191.667	145.848	291.667	195.925	391.667	246.003	491.667	55
56	46.6966	93.3333	96.6592	193.333	146.679	293.333	196.756	393.333	246.833	493.333	56
57	47.5274	95.0000	97.4900	195.000	147.510	295.000	197.587	395.000	247.664	495.000	57
58	48.3582	96.6667	98.3208	196.667	148.341	296.667	198.418	396.667	248.495	496.667	58
59	49.1890	98.3333	99.1802	198.333	149.200	298.333	199.249	398.333	249.326	498.333	59

TABLE 53. — *Continued*

TANGENTS AND ARCS OF A ONE-DEGREE CURVE

	Δ										
	5°		6°		7°		8°		9°		
M	Tan	Arc	Tan	Arc	Tan	Arc	Tan	Arc	Tan	Arc	M
0	250.157	500.000	300.291	600.000	350.425	700.000	400.674	800.000	450.923	900.000	0
1	250.987	501.667	301.122	601.667	351.256	701.667	401.505	801.667	451.754	901.667	1
2	251.818	503.333	301.953	603.333	352.087	703.333	402.336	803.333	452.585	903.333	2
3	252.649	505.000	302.783	605.000	352.946	705.000	403.167	805.000	453.445	905.000	3
4	253.480	506.667	303.614	606.667	353.806	706.667	403.998	806.667	454.304	906.667	4
5	254.339	508.333	304.445	608.333	354.637	708.333	404.828	808.333	455.135	908.333	5
6	255.199	510.000	305.276	610.000	355.467	710.000	405.659	810.000	455.966	910.000	6
7	256.029	511.667	306.107	611.667	356.298	711.667	406.519	811.667	456.796	911.667	7
8	256.860	513.333	306.937	613.333	357.129	713.333	407.378	813.333	457.627	913.333	8
9	257.691	515.000	307.797	615.000	357.960	715.000	408.209	815.000	458.487	915.000	9
10	258.522	516.667	308.656	616.667	358.791	716.667	409.040	816.667	459.346	916.667	10
11	259.353	518.333	309.487	618.333	359.621	718.333	409.871	818.333	460.177	918.333	11
12	260.183	520.000	310.318	620.000	360.452	720.000	410.701	820.000	461.008	920.000	12
13	261.014	521.667	311.149	621.667	361.312	721.667	411.532	821.667	461.838	921.667	13
14	261.845	523.333	311.979	623.333	362.171	723.333	412.363	823.333	462.669	923.333	14
15	262.676	525.000	312.810	625.000	363.002	725.000	413.222	825.000	463.500	925.000	15
16	263.507	526.667	313.641	626.667	363.833	726.667	414.082	826.667	464.331	926.667	16
17	264.337	528.333	314.472	628.333	364.664	728.333	414.913	828.333	465.190	928.333	17
18	265.168	530.000	315.303	630.000	365.494	730.000	415.743	830.000	466.050	930.000	18
19	266.028	531.667	316.162	631.667	366.325	731.667	416.574	831.667	466.881	931.667	19
20	266.887	533.333	317.022	633.333	367.156	733.333	417.405	833.333	467.711	933.333	20
21	267.718	535.000	317.852	635.000	367.987	735.000	418.236	835.000	468.542	935.000	21
22	268.549	536.667	318.683	636.667	368.818	736.667	419.067	836.667	469.373	936.667	22
23	269.379	538.333	319.514	638.333	369.677	738.333	419.926	838.333	470.204	938.333	23
24	270.210	540.000	320.345	640.000	370.536	740.000	420.785	840.000	471.035	940.000	24
25	271.041	541.667	321.176	641.667	371.367	741.667	421.616	841.667	471.894	941.667	25
26	271.872	543.333	322.006	643.333	372.198	743.333	422.447	843.333	472.753	943.333	26
27	272.703	545.000	322.837	645.000	373.029	745.000	423.278	845.000	473.584	945.000	27
28	273.533	546.667	323.668	646.667	373.860	746.667	424.109	846.667	474.415	946.667	28
29	274.364	548.333	324.499	648.333	374.690	748.333	424.939	848.333	475.246	948.333	29

TANGENTS AND ARCS OF A ONE-DEGREE CURVE

	Δ										
	5°		6°		7°		8°		9°		
M	Tan	Arc	Tan	Arc	Tan	Arc	Tan	Arc	Tan	Arc	M
30	275.195	550.000	325.330	650.000	375.521	750.000	425.770	850.000	476.077	950.000	30
31	276.055	551.667	326.189	651.667	376.381	751.667	426.630	851.667	476.936	951.667	31
32	276.914	553.333	327.048	653.333	377.240	753.333	427.489	853.333	477.796	953.333	32
33	277.745	555.000	327.879	655.000	378.071	755.000	428.320	855.000	478.627	955.000	33
34	278.576	556.667	328.710	656.667	378.902	756.667	429.151	856.667	479.457	956.667	34
35	279.406	558.333	329.541	658.333	379.733	758.333	429.982	858.333	480.289	958.333	35
36	280.237	560.000	330.372	660.000	380.563	760.000	430.812	860.000	481.119	960.000	36
37	281.068	561.667	331.202	661.667	381.394	761.667	431.643	861.667	481.978	961.667	37
38	281.899	563.333	332.033	663.333	382.225	763.333	432.474	863.333	482.838	963.333	38
39	282.730	565.000	332.864	665.000	383.056	765.000	433.333	865.000	483.668	965.000	39
40	283.560	566.667	333.695	666.667	383.887	766.667	434.193	866.667	484.499	966.667	40
41	284.391	568.333	334.554	668.333	384.746	768.333	435.024	868.333	485.330	968.333	41
42	285.222	570.000	335.414	670.000	385.605	770.000	435.854	870.000	486.161	970.000	42
43	286.053	571.667	336.245	671.667	386.436	771.667	436.685	871.667	486.992	971.667	43
44	286.884	573.333	337.075	673.333	387.267	773.333	437.516	873.333	487.822	973.333	44
45	287.743	575.000	337.906	675.000	388.098	775.000	438.347	875.000	488.682	975.000	45
46	288.602	576.667	338.737	676.667	388.929	776.667	439.178	876.667	489.541	976.667	46
47	289.433	578.333	339.568	678.333	389.759	778.333	440.037	878.333	490.372	978.333	47
48	290.264	580.000	340.399	680.000	390.590	780.000	440.897	880.000	491.203	980.000	48
49	291.095	581.667	341.229	681.667	391.450	781.667	441.727	881.667	492.034	981.667	49
50	291.926	583.333	342.060	683.333	392.309	783.333	442.558	883.333	492.864	983.333	50
51	292.756	585.000	342.891	685.000	393.140	785.000	443.389	885.000	493.724	985.000	51
52	293.587	586.667	343.722	686.667	393.971	786.667	444.220	886.667	494.583	986.667	52
53	294.418	588.333	344.581	688.333	394.802	788.333	445.051	888.333	495.414	988.333	53
54	295.249	590.000	345.441	690.000	395.632	790.000	445.881	890.000	496.245	990.000	54
55	296.080	591.667	346.271	691.667	396.463	791.667	446.741	891.667	497.076	991.667	55
56	296.910	593.333	347.102	693.333	397.294	793.333	447.600	893.333	497.907	993.333	56
57	297.770	595.000	347.933	695.000	398.125	795.000	448.431	895.000	498.766	995.000	57
58	298.629	596.667	348.764	696.667	398.956	796.667	449.262	896.667	499.625	996.667	58
59	299.460	598.333	349.595	698.333	399.815	798.333	450.093	898.333	500.456	998.333	59

TABLE 53.—*Continued*

TANGENTS AND ARCS OF A ONE-DEGREE CURVE

	Δ										
	10°		11°		12°		13°		14°		
M	Tan	Arc	Tan	Arc	Tan	Arc	Tan	Arc	Tan	Arc	M
0	501.287	1000.00	551.708	1100.00	602.186	1200.00	652.836	1300.00	703.486	1400.00	0
1	502.118	1001.67	552.539	1101.67	603.046	1201.67	653.667	1301.67	704.346	1401.67	1
2	502.949	1003.33	553.370	1103.33	603.905	1203.33	654.498	1303.33	705.205	1403.33	2
3	503.779	1005.00	554.229	1105.00	604.736	1205.00	655.329	1305.00	706.065	1405.00	3
4	504.610	1006.67	555.088	1106.67	605.567	1206.67	656.160	1306.67	706.924	1406.67	4
5	505.470	1008.33	555.919	1108.33	606.426	1208.33	657.019	1308.33	707.755	1408.33	5
6	506.329	1010.00	556.750	1110.00	607.286	1210.00	657.878	1310.00	708.586	1410.00	6
7	507.160	1011.67	557.581	1111.67	608.116	1211.67	658.709	1311.67	709.445	1411.67	7
8	507.991	1013.33	558.412	1113.33	608.947	1213.33	659.540	1313.33	710.305	1413.33	8
9	508.822	1015.00	559.271	1115.00	609.778	1215.00	660.399	1315.00	711.136	1415.00	9
10	509.652	1016.67	560.131	1116.67	610.609	1216.67	661.259	1316.67	711.966	1416.67	10
11	510.512	1018.33	560.961	1118.33	611.468	1218.33	662.090	1318.33	712.826	1418.33	11
12	511.371	1020.00	561.792	1120.00	612.328	1220.00	662.921	1320.00	713.685	1420.00	12
13	512.202	1021.67	562.623	1121.67	613.158	1221.67	663.780	1321.67	714.516	1421.67	13
14	513.033	1023.33	563.454	1123.33	613.989	1223.33	664.639	1323.33	715.347	1423.33	14
15	513.864	1025.00	564.313	1125.00	614.849	1225.00	665.470	1325.00	716.206	1425.00	15
16	514.694	1026.67	565.173	1126.67	615.708	1226.67	666.301	1326.67	717.066	1426.67	16
17	515.554	1028.33	566.003	1128.33	616.539	1228.33	667.160	1328.33	717.896	1428.33	17
18	516.413	1030.00	566.834	1130.00	617.370	1230.00	663.020	1330.00	718.727	1430.00	18
19	517.244	1031.67	567.694	1131.67	618.229	1231.67	668.851	1331.67	719.587	1431.67	19
20	518.075	1033.33	568.553	1133.33	619.089	1233.33	669.681	1333.33	720.446	1433.33	20
21	518.906	1035.00	569.384	1135.00	619.919	1235.00	670.541	1335.00	721.277	1435.00	21
22	519.737	1036.67	570.215	1136.67	620.750	1236.67	671.400	1336.67	722.108	1436.67	22
23	520.596	1038.33	571.046	1138.33	621.581	1238.33	672.231	1338.33	722.967	1438.33	23
24	521.455	1040.00	571.876	1140.00	622.412	1240.00	673.062	1340.00	723.827	1440.00	24
25	522.286	1041.67	572.736	1141.67	623.271	1241.67	673.921	1341.67	724.657	1441.67	25
26	523.117	1043.33	573.595	1143.33	624.131	1243.33	674.781	1343.33	725.488	1443.33	26
27	523.948	1045.00	574.426	1145.00	624.962	1245.00	675.612	1345.00	726.348	1445.00	27
28	524.779	1046.67	575.257	1146.67	625.792	1246.67	676.442	1346.67	727.207	1446.67	28
29	525.638	1048.33	576.088	1148.33	626.652	1248.33	677.302	1348.33	728.067	1448.33	29

TANGENTS AND ARCS OF A ONE-DEGREE CURVE

	Δ										
	10°		11°		12°		13°		14°		
M	Tan	Arc	Tan	Arc	Tan	Arc	Tan	Arc	Tan	Arc	M
30	526.498	1050.00	576.918	1150.00	627.511	1250.00	678.161	1350.00	728.926	1450.00	30
31	527.328	1051.67	577.778	1151.67	628.342	1251.67	678.992	1351.67	729.757	1451.67	31
32	528.159	1053.33	578.637	1153.33	629.173	1253.33	679.823	1353.33	730.588	1453.33	32
33	528.990	1055.00	579.468	1155.00	630.032	1255.00	680.682	1355.00	731.447	1455.00	33
34	529.821	1056.67	580.299	1156.67	630.892	1256.67	681.542	1356.67	732.307	1456.67	34
35	530.680	1058.33	581.158	1158.33	631.723	1258.33	682.373	1358.33	733.137	1458.33	35
36	531.540	1060.00	582.018	1160.00	632.553	1260.00	683.203	1360.00	733.968	1460.00	36
37	532.370	1061.67	582.849	1161.67	633.413	1261.67	684.063	1361.67	734.828	1461.67	37
38	533.201	1063.33	583.679	1163.33	634.272	1263.33	684.922	1363.33	735.687	1463.33	38
39	534.032	1065.00	584.510	1165.00	635.103	1265.00	685.753	1365.00	736.518	1465.00	39
40	534.863	1066.67	585.341	1166.67	635.934	1266.67	686.584	1366.67	737.349	1466.67	40
41	535.722	1068.33	586.200	1168.33	636.765	1268.33	687.443	1368.33	738.208	1468.33	41
42	536.582	1070.00	587.060	1170.00	637.595	1270.00	688.303	1370.00	739.068	1470.00	42
43	537.413	1071.67	587.891	1171.67	638.455	1271.67	689.134	1371.67	739.927	1471.67	43
44	538.243	1073.33	588.722	1173.33	639.314	1273.33	689.964	1373.33	740.786	1473.33	44
45	539.074	1075.00	589.581	1175.00	640.145	1275.00	690.824	1375.00	741.617	1475.00	45
46	539.905	1076.67	590.440	1176.67	640.976	1276.67	691.683	1376.67	742.448	1476.67	46
47	540.764	1078.33	591.271	1178.33	641.835	1278.33	692.514	1378.33	743.307	1478.33	47
48	541.624	1080.00	592.102	1180.00	642.695	1280.00	693.345	1380.00	744.167	1480.00	48
49	542.455	1081.67	592.933	1181.67	643.526	1281.67	694.204	1381.67	744.998	1481.67	49
50	543.285	1083.33	593.764	1183.33	644.356	1283.33	695.064	1383.33	745.829	1483.33	50
51	544.116	1085.00	594.623	1185.00	645.216	1285.00	695.895	1385.00	746.688	1485.00	51
52	544.947	1086.67	595.483	1186.67	646.075	1286.67	696.725	1386.68	747.547	1486.67	52
53	545.806	1088.33	596.313	1188.33	646.906	1288.33	697.585	1388.33	748.378	1488.33	53
54	546.666	1090.00	597.144	1190.00	647.737	1290.00	698.444	1390.00	749.209	1490.00	54
55	547.497	1091.67	598.004	1191.67	648.596	1291.67	699.275	1391.67	750.068	1491.67	55
56	548.328	1093.33	598.863	1193.33	649.456	1293.33	700.106	1393.33	750.928	1493.33	56
57	549.187	1095.00	599.694	1195.00	650.287	1295.00	700.965	1395.00	751.787	1495.00	57
58	550.046	1096.67	600.525	1196.67	651.117	1296.67	701.825	1396.67	752.647	1496.67	58
59	550.877	1098.33	601.355	1198.33	651.977	1298.33	702.656	1398.33	753.478	1498.33	59

TABLE 53. — *Continued*

TANGENTS AND ARCS OF A ONE-DEGREE CURVE

	Δ										
	15°		16°		17°		18°		19°		
M	Tan	Arc	Tan	Arc	Tan	Arc	Tan	Arc	Tan	Arc	M
0	754.308	1500.00	805.245	1600.00	856.296	1700.00	907.462	1800.00	958.800	1900.00	0
1	755.168	1501.67	806.104	1601.67	857.156	1701.67	908.321	1801.67	959.659	1901.67	1
2	756.027	1503.33	806.964	1603.33	858.015	1703.33	909.181	1803.33	960.519	1903.33	2
3	756.858	1505.00	807.795	1605.00	858.875	1705.00	910.040	1805.00	961.378	1905.00	3
4	757.689	1506.67	808.626	1606.67	859.734	1706.67	910.900	1806.67	962.237	1906.67	4
5	758.548	1508.33	809.485	1608.33	860.565	1708.33	911.759	1808.33	963.097	1908.33	5
6	759.408	1510.00	810.344	1610.00	861.396	1710.00	912.619	1810.00	963.956	1910.00	6
7	760.267	1511.67	811.204	1611.67	862.255	1711.67	913.478	1811.67	964.816	1911.67	7
8	761.127	1513.33	812.063	1613.33	863.114	1713.33	914.338	1813.33	965.675	1913.33	8
9	761.958	1515.00	812.894	1615.00	863.974	1715.00	915.197	1815.00	966.535	1915.00	9
10	762.788	1516.67	813.725	1616.67	864.833	1716.67	916.056	1816.67	967.394	1916.67	10
11	763.648	1518.33	814.584	1618.33	865.693	1718.33	916.887	1818.33	968.254	1918.33	11
12	764.507	1520.00	815.444	1620.00	866.552	1720.00	917.718	1820.00	969.113	1920.00	12
13	765.338	1521.67	816.303	1621.67	867.383	1721.67	918.577	1821.67	969.972	1921.67	13
14	766.169	1523.33	817.163	1623.33	868.214	1723.33	919.437	1823.33	970.832	1923.33	14
15	767.028	1525.00	817.993	1625.00	869.073	1725.00	920.296	1825.00	971.691	1925.00	15
16	767.888	1526.67	818.824	1626.67	869.933	1726.67	921.156	1826.67	972.551	1926.67	16
17	768.747	1528.33	819.684	1628.33	870.792	1728.33	922.015	1828.33	973.410	1928.33	17
18	769.607	1530.00	820.543	1630.00	871.652	1730.00	922.875	1830.00	974.270	1930.00	18
19	770.437	1531.67	821.403	1631.67	872.511	1731.67	923.734	1831.07	975.100	1931.67	19
20	771.268	1533.33	822.262	1633.33	873.371	1733.33	924.594	1833.33	975.931	1933.33	20
21	772.128	1535.00	823.122	1635.00	874.201	1735.00	925.453	1835.00	976.791	1935.00	21
22	772.987	1536.67	823.981	1636.67	875.032	1736.67	926.313	1836.67	977.650	1936.67	22
23	773.847	1538.33	824.812	1638.33	875.892	1738.33	927.143	1838.33	978.510	1938.33	23
24	774.706	1540.00	825.643	1640.00	876.751	1740.00	927.974	1840.00	979.369	1940.00	24
25	775.537	1541.67	826.502	1641.67	877.610	1741.67	928.834	1841.67	980.229	1941.67	25
26	776.368	1543.33	827.361	1643.33	878.470	1743.33	929.693	1843.33	981.088	1943.33	26
27	777.227	1545.00	828.221	1645.00	879.329	1745.00	930.552	1845.00	981.947	1945.00	27
28	778.086	1546.67	829.080	1646.67	880.189	1746.67	931.412	1846.67	982.807	1946.67	28
29	778.917	1548.38	829.911	1648.33	881.020	1748.33	932.271	1848.33	983.666	1948.33	29

TANGENTS AND ARCS OF A ONE-DEGREE CURVE

	Δ										
	15°		16°		17°		18°		19°		
M	Tan	Arc	Tan	Arc	Tan	Arc	Tan	Arc	Tan	Arc	M
30	779.748	1550.00	830.742	1650.00	881.850	1750.00	933.131	1850.00	984.526	1950.00	30
31	780.608	1551.67	831.601	1651.67	882.710	1751.67	933.990	1851.67	985.385	1951.67	31
32	781.467	1553.33	832.461	1653.33	883.569	1753.33	934.850	1853.33	986.245	1953.33	32
33	782.326	1555.00	833.320	1655.00	884.429	1755.00	935.709	1855.00	987.104	1955.00	33
34	783.186	1556.67	834.180	1656.67	885.288	1756.67	936.569	1856.67	987.964	1956.67	34
35	784.017	1558.33	835.011	1658.33	886.148	1758.33	937.428	1858.33	988.823	1958.33	35
36	784.847	1560.00	835.841	1660.00	887.007	1760.00	938.287	1860.00	989.682	1960.00	36
37	785.707	1561.67	836.701	1661.67	887.867	1761.67	939.118	1861.67	990.542	1961.67	37
38	786.566	1563.33	837.560	1663.33	888.726	1763.33	939.949	1863.33	991.401	1963.33	38
39	787.426	1565.00	838.420	1665.00	889.557	1765.00	940.809	1865.00	992.261	1965.00	39
40	788.285	1566.67	839.279	1666.67	890.388	1766.67	941.668	1866.67	993.120	1966.67	40
41	789.116	1568.33	840.139	1668.33	891.247	1768.33	942.527	1868.33	993.980	1968.33	41
42	789.947	1570.00	840.998	1670.00	892.107	1770.00	943.387	1870.00	994.839	1970.00	42
43	790.806	1571.67	841.829	1671.67	892.966	1771.67	944.246	1871.67	995.699	1971.67	43
44	791.666	1573.33	842.660	1673.33	893.825	1773.33	945.106	1873.33	996.558	1973.33	44
45	792.497	1575.00	843.519	1675.00	894.685	1775.00	945.965	1875.00	997.417	1975.00	45
46	793.327	1576.67	844.379	1676.67	895.544	1776.67	946.825	1876.67	998.277	1976.67	46
47	794.187	1578.33	845.238	1678.33	896.404	1778.33	947.684	1878.33	999.136	1978.33	47
48	795.046	1580.00	846.097	1680.00	897.263	1780.00	948.544	1880.00	999.996	1980.00	48
49	795.906	1581.67	846.928	1681.67	898.094	1781.67	949.403	1881.67	1000.86	1981.67	49
50	796.765	1583.33	847.759	1683.33	898.925	1783.33	950.262	1883.33	1001.71	1983.33	50
51	797.596	1585.00	848.618	1685.00	899.784	1785.00	951.122	1885.00	1002.57	1985.00	51
52	798.427	1586.67	849.478	1686.67	900.644	1786.67	951.981	1886.67	1003.43	1986.67	52
53	799.286	1588.33	850.337	1688.33	901.503	1788.33	952.841	1888.33	1004.29	1988.33	53
54	800.146	1590.00	851.197	1690.00	902.363	1790.00	953.700	1890.00	1005.15	1990.00	54
55	801.005	1591.67	852.056	1691.67	903.222	1791.67	954.531	1891.67	1006.01	1991.67	55
56	801.865	1593.33	852.916	1693.33	904.081	1793.33	955.362	1893.33	1006.87	1993.33	56
57	802.695	1595.00	853.746	1695.00	904.941	1795.00	956.221	1895.00	1007.73	1995.00	57
58	803.526	1596.67	854.577	1696.67	905.800	1796.67	957.081	1896.67	1008.59	1996.67	58
59	804.386	1598.33	855.437	1698.33	906.631	1798.33	957.940	1898.33	1009.45	1998.33	59

TABLE 53. — *Continued*

TANGENTS AND ARCS OF A ONE-DEGREE CURVE

	Δ										
	20°		21°		22°		23°		24°		
M	Tan	Arc	Tan	Arc	Tan	Arc	Tan	Arc	Tan	Arc	M
0	1010.31	2000.00	1061.93	2100.00	1113.73	2200.00	1165.70	2300.00	1217.89	2400.00	0
1	1011.16	2001.67	1062.79	2101.67	1114.59	2201.67	1166.59	2301.67	1218.75	2401.67	1
2	1012.03	2003.33	1063.65	2103.33	1115.45	2203.33	1167.47	2303.33	1219.61	2403.33	2
3	1012.89	2005.00	1064.51	2105.00	1116.31	2205.00	1168.33	2305.00	1220.47	2405.00	3
4	1013.75	2006.67	1065.37	2106.67	1117.17	2206.67	1169.19	2306.67	1221.33	2406.67	4
5	1014.61	2008.33	1066.23	2108.33	1118.06	2208.33	1170.05	2308.33	1222.22	2408.33	5
6	1015.47	2010.00	1067.09	2110.00	1118.94	2210.00	1170.91	2310.00	1223.11	2410.00	6
7	1016.33	2011.67	1067.95	2111.67	1119.80	2211.67	1171.77	2311.67	1223.97	2411.67	7
8	1017.18	2013.33	1068.81	2113.33	1120.66	2213.33	1172.63	2313.33	1224.83	2413.33	8
9	1018.04	2015.00	1069.67	2115.00	1121.52	2215.00	1173.52	2315.00	1225.72	2415.00	9
10	1018.90	2016.67	1070.53	2116.67	1122.38	2216.67	1174.41	2316.67	1226.60	2416.67	10
11	1019.76	2018.33	1071.39	2118.33	1123.24	2218.33	1175.27	2318.33	1227.46	2418.33	11
12	1020.62	2020.00	1072.25	2120.00	1124.10	2220.00	1176.13	2320.00	1228.32	2420.00	12
13	1021.48	2021.67	1073.13	2121.67	1124.96	2221.67	1176.98	2321.67	1229.21	2421.67	13
14	1022.34	2023.33	1074.02	2123.33	1125.82	2223.33	1177.84	2323.33	1230.10	2423.33	14
15	1023.20	2025.00	1074.88	2125.00	1126.71	2225.00	1178.73	2325.00	1230.96	2425.00	15
16	1024.06	2026.67	1075.74	2126.67	1127.60	2226.67	1179.62	2326.67	1231.82	2426.67	16
17	1024.92	2028.33	1076.60	2128.33	1128.45	2228.33	1180.48	2328.33	1232.68	2428.33	17
18	1025.78	2030.00	1077.46	2130.00	1129.31	2230.00	1181.34	2330.00	1233.54	2430.00	18
19	1026.64	2031.67	1078.32	2131.67	1130.17	2231.67	1182.20	2331.67	1234.42	2431.67	19
20	1027.50	2033.33	1079.18	2133.33	1131.03	2233.33	1183.06	2333.33	1235.31	2433.33	20
21	1028.36	2035.00	1080.04	2135.00	1131.89	2235.00	1183.95	2335.00	1236.17	2435.00	21
22	1029.22	2036.67	1080.90	2136.67	1132.75	2236.67	1184.83	2336.67	1237.03	2436.67	22
23	1030.08	2038.33	1081.76	2138.33	1133.64	2238.33	1185.69	2338.33	1237.92	2438.33	23
24	1030.94	2040.00	1082.62	2140.00	1134.53	2240.00	1186.55	2340.00	1238.81	2440.00	24
25	1031.80	2041.67	1083.48	2141.67	1135.39	2241.67	1187.41	2341.67	1239.67	2441.67	25
26	1032.65	2043.33	1084.34	2143.33	1136.25	2243.33	1188.27	2343.33	1240.53	2443.33	26
27	1033.51	2045.00	1085.20	2145.00	1137.11	2245.00	1189.16	2345.00	1241.41	2445.00	27
28	1034.37	2046.67	1086.06	2146.67	1137.97	2246.67	1190.05	2346.67	1242.30	2446.67	28
29	1035.23	2048.33	1086.94	2148.33	1138.83	2248.33	1190.91	2348.33	1243.16	2448.33	29

TANGENTS AND ARCS OF A ONE-DEGREE CURVE

	Δ										
	20°		21°		22°		23°		24°		
M	Tan	Arc	Tan	Arc	Tan	Arc	Tan	Arc	Tan	Arc	M
30	1036.09	2050.00	1087.83	2150.00	1139.68	2250.00	1191.77	2350.00	1244.02	2450.00	30
31	1036.95	2051.67	1088.69	2151.67	1140.54	2251.67	1192.63	2351.67	1244.91	2451.67	31
32	1037.81	2053.33	1089.55	2153.33	1141.40	2253.33	1193.49	2353.33	1245.80	2453.33	32
33	1038.67	2055.00	1090.41	2155.00	1142.29	2255.00	1194.37	2355.00	1246.66	2455.00	33
34	1039.53	2056.67	1091.27	2156.67	1143.18	2256.67	1195.26	2356.67	1247.52	2456.67	34
35	1040.39	2058.33	1092.13	2158.33	1144.04	2258.33	1196.12	2358.33	1248.40	2458.33	35
36	1041.25	2060.00	1092.99	2160.00	1144,90	2260.00	1196.98	2360.00	1249.29	2460.00	36
37	1042.11	2061.67	1093.85	2161.67	1145.76	2261.67	1197.84	2361.67	1250.15	2461.67	37
38	1042.97	2063.33	1094.71	2163.33	1146.62	2263.33	1198.70	2363.33	1251.01	2463.33	38
39	1043.83	2065.00	1095.57	2165.00	1147.48	2265.00	1199.59	2365.00	1251.87	2465.00	39
40	1044.69	2066.67	1096.43	2166.67	1148.34	2266.67	1200.48	2366.67	1252.73	2466.67	40
41	1045.55	2068.33	1097.29	2168.33	1149.22	2268.33	1201.34	2368.33	1253.62	2468.33	41
42	1046.41	2070.00	1098.14	2170.00	1150.11	2270.00	1202.20	2370.00	1254.51	2470.00	42
43	1047.27	2071.67	1099.03	2171.67	1150.97	2271.67	1203.08	2371.67	1255.37	2471.67	43
44	1048.12	2073.33	1099.92	2173.33	1151.83	2273.33	1203.97	2373.33	1256.23	2473.33	44
45	1048.98	2075.00	1100.78	2175.00	1152.69	2275.00	1204.83	2375.00	1257.11	2475.00	45
46	1049.84	2076.67	1101.64	2176.67	1153.55	2276.67	1205.69	2376.67	1258.00	2476.67	46
47	1050.70	2078.33	1102.50	2178.33	1154.44	2278.33	1206.55	2378.33	1258.86	2478.33	47
48	1051.56	2080.00	1103.36	2180.00	1155.33	2280.00	1207.41	2380.00	1259.72	2480.00	48
49	1052.45	2081.67	1104.22	2181.67	1156.19	2281.67	1208.30	2381.67	1260.61	2481.67	49
50	1053.34	2083.33	1105.08	2183.33	1157.05	2283.33	1209.19	2383.33	1261.50	2483.33	50
51	1054.20	2085.00	1105.94	2185.00	1157.90	2285.00	1210.04	2385.00	1262.36	2485.00	51
52	1055.06	2086.67	1106.80	2186.67	1158.76	2286.67	1210.90	2386.67	1263.22	2486.67	52
53	1055.92	2088.33	1107.66	2188.33	1159.62	2288.33	1211.76	2388.33	1264.10	2488.33	53
54	1056.78	2090.00	1108.52	2190.00	1160.48	2290.00	1212.62	2390.00	1264.99	2490.00	54
55	1057.64	2091.67	1109.40	2191.67	1161.37	2291.67	1213.51	2391.67	1265.85	2491.67	55
56	1058.50	2093.33	1110.29	2193.33	1162.26	2293.33	1214.40	2393.33	1266.71	2493.33	56
57	1059.35	2095.00	1111.15	2195.00	1163.12	2295.00	1215.26	2395.00	1267.60	2495.00	57
58	1060.21	2096.67	1112.01	2196.67	1163.98	2296.67	1216.12	2396.67	1268.49	2496.67	58
59	1061.07	2098.33	1112.87	2198.33	1164.84	2298.33	1217.01	2398.33	1269.35	2498.33	59

TABLE 53.—*Continued*

TANGENTS AND ARCS OF A ONE-DEGREE CURVE

	Δ										
	25°		26°		27°		28°		29°		
M	Tan	Arc	Tan	Arc	Tan	Arc	Tan	Arc	Tan	Arc	M
0	1270.21	2500.00	1322.80	2600.00	1375.57	2700.00	1428.57	2800.00	1481.80	2900.00	0
1	1271.09	2501.67	1323.66	2601.67	1376.46	2701.67	1429.46	2801.67	1482.69	2901.67	1
2	1271.98	2503.33	1324.52	2603.33	1377.35	2703.33	1430.35	2803.33	1483.58	2903.33	2
3	1272.87	2505.00	1325.41	2605.00	1378.21	2705.00	1431.24	2805.00	1484.47	2905.00	3
4	1273.76	2506.67	1326.30	2606.67	1379.07	2706.67	1432.13	2806.67	1485.35	2906.67	4
5	1274.62	2508.33	1327.19	2608.33	1379.96	2708.33	1433.01	2808.33	1486.24	2908.33	5
6	1275.48	2510.00	1328.08	2610.00	1380.85	2710.00	1433.90	2810.00	1487.13	2910.00	6
7	1276.37	2511.67	1328.94	2611.67	1381.73	2711.67	1434.76	2811.67	1488.02	2911.67	7
8	1277.25	2513.33	1329.79	2613.33	1382.62	2713.33	1435.62	2813.33	1488.91	2913.33	8
9	1278.11	2515.00	1330.68	2615.00	1383.51	2715.00	1436.51	2815.00	1489.79	2915.00	9
10	1278.97	2516.67	1331.57	2616.67	1384.40	2716.67	1437.40	2816.67	1490.68	2916.67	10
11	1279.86	2518.33	1332.46	2618.33	1385.29	2718.33	1438.29	2818.33	1491.57	2918.33	11
12	1280.75	2520.00	1333.35	2620.00	1386.17	2720.00	1439.17	2820.00	1492.46	2920.00	12
13	1281.61	2521.67	1334.21	2621.67	1387.03	2721.67	1440.06	2821.67	1493.35	2921.67	13
14	1282.47	2523.33	1335.07	2623.33	1387.89	2723.33	1440.95	2823.33	1494.24	2923.33	14
15	1283.36	2525.00	1335.95	2625.00	1388.78	2725.00	1441.84	2825.00	1495.12	2925.00	15
16	1284.24	2526.67	1336.84	2626.67	1389.67	2726.67	1442.73	2826.67	1496.01	2926.67	16
17	1285.10	2528.33	1337.73	2628.33	1390.56	2728.33	1443.61	2828.33	1496.90	2928.33	17
18	1285.96	2530.00	1338.62	2630.00	1391.45	2730.00	1444.50	2830.00	1497.79	2930.00	18
19	1286.85	2531.67	1339.48	2631.67	1392.33	2731.67	1445.39	2831.67	1498.68	2931.67	19
20	1287.74	2533.33	1340.34	2633.33	1393.22	2733.33	1446.28	2833.33	1499.56	2933.33	20
21	1288.60	2535.00	1341.23	2635.00	1394.11	2735.00	1447.17	2835.00	1500.45	2935.00	21
22	1289.46	2536.67	1342.11	2636.67	1395.00	2736.67	1448.05	2836.67	1501.34	2936.67	22
23	1290.35	2538.33	1343.00	2638.33	1395.86	2738.33	1448.94	2838.33	1502.26	2938.33	23
24	1291.23	2540.00	1343.89	2640.00	1396.72	2740.00	1449.83	2840.00	1503.17	2940.00	24
25	1292.12	2541.67	1344.75	2641.67	1397.60	2741.67	1450.72	2841.67	1504.06	2941.67	25
26	1293.01	2543.33	1345.61	2643.33	1398.49	2743.33	1451.61	2843.33	1504.95	2943.33	26
27	1293.87	2545.00	1346.50	2645.00	1399.38	2745.00	1452.49	2845.00	1505.84	2945.00	27
28	1294.73	2546.67	1347.38	2646.67	1400.27	2746.67	1453.38	2846.67	1506.73	2946.67	28
29	1295.62	2548.33	1348.27	2648.33	1401.16	2748.33	1454.27	2848.33	1507.61	2948.33	29

TANGENTS AND ARCS OF A ONE-DEGREE CURVE

	Δ										
	25°		26°		27°		28°		29°		
M	Tan	Arc	Tan	Arc	Tan	Arc	Tan	Arc	Tan	Arc	M
30	1296.51	2550.00	1349.16	2650.00	1402.05	2750.00	1455.16	2850.00	1508.50	2950.00	30
31	1297.36	2551.67	1350.05	2651.67	1402.93	2751.67	1456.05	2851.67	1509.39	2951.67	31
32	1298.22	2553.33	1350.94	2653.33	1403.82	2753.33	1456.94	2853.33	1510.28	2953.33	32
33	1299.11	2555.00	1351.80	2655.00	1404.71	2755.00	1457.82	2855.00	1511.17	2955.00	33
34	1300.00	2556.67	1352.66	2656.67	1405.60	2756.67	1458.71	2856.67	1512.05	2956.67	34
35	1300.86	2558.33	1353.54	2658.33	1406.46	2758.33	1459.60	2858.33	1512.94	2958.33	35
36	1301.72	2560.00	1354.43	2660.00	1407.32	2760.00	1460.49	2860.00	1513.83	2960.00	36
37	1302.61	2561.67	1355.32	2661.67	1408.20	2761.67	1461.38	2861.67	1514.72	2961.67	37
38	1303.50	2563.33	1356.21	2663.33	1409.09	2763.33	1462.26	2863.33	1515.61	2963.33	38
39	1304.38	2565.00	1357.07	2665.00	1409.98	2765.00	1463.15	2865.00	1516.50	2965.00	39
40	1305.27	2566.67	1357.93	2666.67	1410.87	2766.67	1464.04	2866.67	1517.38	2966.67	40
41	1306.13	2568.33	1358.82	2668.33	1411.76	2768.33	1464.93	2868.33	1518.30	2968.33	41
42	1306.99	2570.00	1359.70	2670.00	1412.65	2770.00	1465.82	2870.00	1519.22	2970.00	42
43	1307.88	2571.67	1360.59	2671.67	1413.53	2771.67	1466.70	2871.67	1520.10	2971.67	43
44	1308.77	2573.33	1361.48	2673.33	1414.42	2773.33	1467.59	2873.33	1520.99	2973.33	44
45	1309.63	2575.00	1362.37	2675.00	1415.31	2775.00	1468.48	2875.00	1521.88	2975.00	45
46	1310.49	2576.67	1363.26	2676.67	1416.20	2776.67	1469.37	2876.67	1522.77	2976.67	46
47	1311.37	2578.33	1364.12	2678.33	1417.06	2778.33	1470.26	2878.33	1523.66	2978.33	47
48	1312.26	2580.00	1364.97	2680.00	1417.92	2780.00	1471.14	2880.00	1524.55	2980.00	48
49	1313.15	2581.67	1365.86	2681.67	1418.80	2781.67	1472.03	2881.67	1525.43	2981.67	49
50	1314.04	2583.33	1366.75	2683.33	1419.69	2783.33	1472.92	2883.33	1526.32	2983.33	50
51	1314.90	2585.00	1367.64	2685.00	1420.58	2785.00	1473.81	2885.00	1527.21	2985.00	51
52	1315.76	2586.67	1368.53	2686.67	1421.47	2786.67	1474.70	2886.67	1528.10	2986.67	52
53	1316.64	2588.33	1369.41	2688.33	1422.36	2788.33	1475.59	2888.33	1528.99	2988.33	53
54	1317.53	2590.00	1370.30	2690.00	1423.25	2790.00	1476.47	2890.00	1529.87	2990.00	54
55	1318.42	2591.67	1371.16	2691.67	1424.13	2791.67	1477.36	2891.67	1530.79	2991.67	55
56	1319.31	2593.33	1372.02	2693.33	1425.02	2793.33	1478.25	2893.33	1531.71	2993.33	56
57	1320.17	2595.00	1372.91	2695.00	1425.91	2795.00	1479.14	2895.00	1532.60	2995.00	57
58	1321.03	2596.67	1373.80	2696.67	1426.80	2796.67	1480.03	2896.07	1533.48	2996.67	58
59	1321.92	2598.33	1374.69	2698.33	1427.69	2798.33	1480.91	2898.33	1534.37	2998.33	59

TABLE 53.—*Continued*

TANGENTS AND ARCS OF A ONE-DEGREE CURVE

	Δ										
	25°		26°		27°		28°		29°		
M	Tan	Arc	Tan	Arc	Tan	Arc	Tan	Arc	Tan	Arc	M
0	1270.21	2500.00	1322.80	2600.00	1375.57	2700.00	1428.57	2800.00	1481.80	2900.00	0
1	1271.09	2501.67	1323.66	2601.67	1376.46	2701.67	1429.46	2801.67	1482.69	2901.67	1
2	1271.98	2503.33	1324.52	2603.33	1377.35	2703.33	1430.35	2803.33	1483.58	2903.33	2
3	1272.87	2505.00	1325.41	2605.00	1378.21	2705.00	1431.24	2805.00	1484.47	2905.00	3
4	1273.76	2506.67	1326.30	2606.67	1379.07	2706.67	1432.13	2806.67	1485.35	2906.67	4
5	1274.62	2508.33	1327.19	2608.33	1379.96	2708.33	1433.01	2808.33	1486.24	2908.33	5
6	1275.48	2510.00	1328.08	2610.00	1380.85	2710.00	1433.90	2810.00	1487.13	2910.00	6
7	1276.37	2511.67	1328.94	2611.67	1381.73	2711.67	1434.76	2811.67	1488.02	2911.67	7
8	1277.25	2513.33	1329.79	2613.33	1382.62	2713.33	1435.62	2813.33	1488.91	2913.33	8
9	1278.11	2515.00	1330.68	2615.00	1383.51	2715.00	1436.51	2815.00	1489.79	2915.00	9
10	1278.97	2516.67	1331.57	2616.67	1384.40	2716.67	1437.40	2816.67	1490.68	2916.67	10
11	1279.86	2518.33	1332.46	2618.33	1385.29	2718.33	1438.29	2818.33	1491.57	2918.33	11
12	1280.75	2520.00	1333.35	2620.00	1386.17	2720.00	1439.17	2820.00	1492.46	2920.00	12
13	1281.61	2521.67	1334.21	2621.67	1387.03	2721.67	1440.06	2821.67	1493.35	2921.67	13
14	1282.47	2523.33	1335.07	2623.33	1387.89	2723.33	1440.95	2823.33	1494.24	2923.33	14
15	1283.36	2525.00	1335.95	2625.00	1388.78	2725.00	1441.84	2825.00	1495.12	2925.00	15
16	1284.24	2526.67	1336.84	2626.67	1389.67	2726.67	1442.73	2826.67	1496.01	2926.67	16
17	1285.10	2528.33	1337.73	2628.33	1390.56	2728.33	1443.61	2828.33	1496.90	2928.33	17
18	1285.96	2530.00	1338.62	2630.00	1391.45	2730.00	1444.50	2830.00	1497.79	2930.00	18
19	1286.85	2531.67	1339.48	2631.67	1392.33	2731.67	1445.39	2831.67	1498.68	2931.67	19
20	1287.74	2533.33	1340.34	2633.33	1393.22	2733.33	1446.28	2833.33	1499.56	2933.33	20
21	1288.60	2535.00	1341.23	2635.00	1394.11	2735.00	1447.17	2835.00	1500.45	2935.00	21
22	1289.46	2536.67	1342.11	2636.67	1395.00	2736.67	1448.05	2836.67	1501.34	2936.67	22
23	1290.35	2538.33	1343.00	2638.33	1395.86	2738.33	1448.94	2838.33	1502.26	2938.33	23
24	1291.23	2540.00	1343.89	2640.00	1396.72	2740.00	1449.83	2840.00	1503.17	2940.00	24
25	1292.12	2541.67	1344.75	2641.67	1397.60	2741.67	1450.72	2841.67	1504.06	2941.67	25
26	1293.01	2543.33	1345.61	2643.33	1398.49	2743.33	1451.61	2843.33	1504.95	2943.33	26
27	1293.87	2545.00	1346.50	2645.00	1399.38	2745.00	1452.49	2845.00	1505.84	2945.00	27
28	1294.73	2546.67	1347.38	2646.67	1400.27	2746.67	1453.38	2846.67	1506.73	2946.67	28
29	1295.62	2548.33	1348.27	2648.33	1401.16	2748.33	1454.27	2848.33	1507.61	2948.33	29

TANGENTS AND ARCS OF A ONE-DEGREE CURVE

	Δ										
	25°		26°		27°		28°		29°		
M	Tan	Arc	Tan	Arc	Tan	Arc	Tan	Arc	Tan	Arc	M
30	1296.51	2550.00	1349.16	2650.00	1402.05	2750.00	1455.16	2850.00	1508.50	2950.00	30
31	1297.36	2551.67	1350.05	2651.67	1402.93	2751.67	1456.05	2851.67	1509.39	2951.67	31
32	1298.22	2553.33	1350.94	2653.33	1403.82	2753.33	1456.94	2853.33	1510.28	2953.33	32
33	1299.11	2555.00	1351.80	2655.00	1404.71	2755.00	1457.82	2855.00	1511.17	2955.00	33
34	1300.00	2556.67	1352.66	2656.67	1405.60	2756.67	1458.71	2856.67	1512.05	2956.67	34
35	1300.86	2558.33	1353.54	2658.33	1406.46	2758.33	1459.60	2858.33	1512.94	2958.33	35
36	1301.72	2560.00	1354.43	2660.00	1407.32	2760.00	1460.49	2860.00	1513.83	2960.00	36
37	1302.61	2561.67	1355.32	2661.67	1408.20	2761.67	1461.38	2861.67	1514.72	2961.67	37
38	1303.50	2563.33	1356.21	2663.33	1409.09	2763.33	1462.26	2863.33	1515.61	2963.33	38
39	1304.38	2565.00	1357.07	2665.00	1409.98	2765.00	1463.15	2865.00	1516.50	2965.00	39
40	1305.27	2566.67	1357.93	2666.67	1410.87	2766.67	1464.04	2866.67	1517.38	2966.67	40
41	1306.13	2568.33	1358.82	2668.33	1411.76	2768.33	1464.93	2868.33	1518.30	2968.33	41
42	1306.99	2570.00	1359.70	2670.00	1412.65	2770.00	1465.82	2870.00	1519.22	2970.00	42
43	1307.88	2571.67	1360.59	2671.67	1413.53	2771.67	1466.70	2871.67	1520.10	2971.67	43
44	1308.77	2573.33	1361.48	2673.33	1414.42	2773.33	1467.59	2873.33	1520.99	2973.33	44
45	1309.63	2575.00	1362.37	2675.00	1415.31	2775.00	1468.48	2875.00	1521.88	2975.00	45
46	1310.49	2576.67	1363.26	2676.67	1416.20	2776.67	1469.37	2876.67	1522.77	2976.67	46
47	1311.37	2578.33	1364.12	2678.33	1417.06	2778.33	1470.26	2878.33	1523.66	2978.33	47
48	1312.26	2580.00	1364.97	2680.00	1417.92	2780.00	1471.14	2880.00	1524.55	2980.00	48
49	1313.15	2581.67	1365.86	2681.67	1418.80	2781.67	1472.03	2881.67	1525.43	2981.67	49
50	1314.04	2583.33	1366.75	2683.33	1419.69	2783.33	1472.92	2883.33	1526.32	2983.33	50
51	1314.90	2585.00	1367.64	2685.00	1420.58	2785.00	1473.81	2885.00	1527.21	2985.00	51
52	1315.76	2586.67	1368.53	2686.67	1421.47	2786.67	1474.70	2886.67	1528.10	2986.67	52
53	1316.64	2588.33	1369.41	2688.33	1422.36	2788.33	1475.59	2888.33	1528.99	2988.33	53
54	1317.53	2590.00	1370.30	2690.00	1423.25	2790.00	1476.47	2890.00	1529.87	2990.00	54
55	1318.42	2591.67	1371.16	2691.67	1424.13	2791.67	1477.36	2891.67	1530.79	2991.67	55
56	1319.31	2593.33	1372.02	2693.33	1425.02	2793.33	1478.25	2893.33	1531.71	2993.33	56
57	1320.17	2595.00	1372.91	2695.00	1425.91	2795.00	1479.14	2895.00	1532.60	2995.00	57
58	1321.03	2596.67	1373.80	2696.67	1426.80	2796.67	1480.03	2896.07	1533.48	2996.67	58
59	1321.92	2598.33	1374.69	2698.33	1427.69	2798.33	1480.91	2898.33	1534.37	2998.33	59

TABLE 53.—*Continued*

TANGENTS AND ARCS OF A ONE-DEGREE CURVE

	Δ										
	30°		31°		32°		33°		34°		
M	Tan	Arc	Tan	Arc	Tan	Arc	Tan	Arc	Tan	Arc	M
0	1535.26	3000.00	1588.95	3100.00	1642.98	3200.00	1697.18	3300.00	1751.73	3400.00	0
1	1536.15	3001.67	1589.86	3101.67	1643.87	3201.67	1698.10	3301.67	1752.64	3401.67	1
2	1537.04	3003.33	1590.78	3103.33	1644.75	3203.33	1699.01	3303.33	1753.56	3403.33	2
3	1537.92	3005.00	1591.67	3105.00	1645.67	3205.00	1699.93	3305.00	1754.48	3405.00	3
4	1538.81	3006.67	1592.56	3106.67	1646.59	3206.67	1700.85	3306.67	1755.39	3406.67	4
5	1539.70	3008.33	1593.44	3108.33	1647.47	3208.33	1701.73	3308.33	1756.31	3408.33	5
6	1540.59	3010.00	1594.33	3110.00	1648.36	3210.00	1702.62	3310.00	1757.23	3410.00	6
7	1541.51	3011.67	1595.25	3111.67	1649.25	3211.67	1703.54	3311.67	1758.11	3411.67	7
8	1542.42	3013.33	1596.17	3113.33	1650.14	3213.33	1704.46	3313.33	1759.00	3413.33	8
9	1543.31	3015.00	1597.05	3115.00	1651.06	3215.00	1705.37	3315.00	1759.92	3415.00	9
10	1544.20	3016.67	1597.94	3116.67	1651.97	3216.67	1706.29	3316.67	1760.84	3416.67	10
11	1545.09	3018.33	1598.86	3118.33	1652.89	3218.33	1707.18	3318.33	1761.75	3418.33	11
12	1545.97	3020.00	1599.78	3120.00	1653.81	3220.00	1708.07	3320.00	1762.67	3420.00	12
13	1546.86	3021.67	1600.66	3121.67	1654.69	3221.67	1708.98	3321.67	1763.59	3421.67	13
14	1547.75	3023.33	1601.55	3123.33	1655.58	3223.33	1709.90	3323.33	1764.50	3423.33	14
15	1548.64	3025.00	1602.44	3125.00	1656.50	3225.00	1710.82	3325.00	1765.42	3425.00	15
16	1549.53	3026.67	1603.33	3126.67	1657.42	3226.67	1711.73	3326.67	1766.34	3426.67	16
17	1550.44	3028.33	1604.24	3128.33	1658.30	3228.33	1712.62	3328.33	1767.25	3428.33	17
18	1551.36	3030.00	1605.16	3130.00	1659.19	3230.00	1713.51	3330.00	1768.17	3430.00	18
19	1552.25	3031.67	1606.05	3131.67	1660.11	3231.67	1714.43	3331.67	1769.06	3431.67	19
20	1553.14	3033.33	1606.94	3133.33	1661.03	3233.33	1715.34	3333.33	1769.95	3433.33	20
21	1554.02	3035.00	1607.83	3135.00	1661.91	3235.00	1716.26	3335.00	1770.86	3435.00	21
22	1554.91	3036.67	1608.71	3136.67	1662.80	3236.67	1717.18	3336.67	1771.78	3436.67	22
23	1555.80	3038.33	1609.63	3138.33	1663.72	3338.33	1718.06	3338.33	1772.70	3438.33	23
24	1556.69	3040.00	1610.55	3140.00	1664.64	3240.00	1718.95	3340.00	1773.61	3440.00	24
25	1557.61	3041.67	1611.44	3141.67	1665.52	3241.67	1719.87	3341.67	1774.53	3441.67	25
26	1558.52	3043.33	1612.32	3143.33	1666.41	3243.33	1720.79	3343.33	1775.45	3443.33	26
27	1559.41	3045.00	1613.24	3145.00	1667.33	3245.00	1721.70	3345.00	1776.36	3445.00	27
28	1560.30	3046.67	1614.16	3146.67	1668.24	3246.67	1722.62	3346.67	1777.28	3446.67	28
29	1561.19	3048.33	1615.05	3148.33	1669.13	3248.33	1723.54	3348.33	1778.20	3448.33	29

TANGENTS AND ARCS OF A ONE-DEGREE CURVE

	Δ										
	30°		31°		32°		33°		34°		
M	Tan	Arc	Tan	Arc	Tan	Arc	Tan	Arc	Tan	Arc	M
30	1562.07	3050.00	1615.93	3150.00	1670.02	3250.00	1724.45	3350.00	1779.11	3450.00	30
31	1562.96	3051.67	1616.82	3151.67	1670.94	3251.67	1725.34	3351.67	1780.03	3451.67	31
32	1563.85	3053.33	1617.71	3153.33	1671.85	3253.33	1726.23	3353.33	1780.95	3453.33	32
33	1564.77	3055.00	1618.63	3155.00	1672.74	3255.00	1727.15	3355.00	1781.86	3455.00	33
34	1565.68	3056.67	1619.54	3156.67	1673.63	3256.67	1728.06	3356.67	1782.78	3456.67	34
35	1566.57	3058.33	1620.43	3158.33	1674.55	3258.33	1728.98	3358.33	1783.70	3458.33	35
36	1567.46	3060.00	1621.32	3160.00	1675.46	3260.00	1729.90	3360.00	1784.61	3460.00	36
37	1568.35	3061.67	1622.24	3161.67	1676.38	3261.67	1730.81	3361.67	1785.50	3461.67	37
38	1569.24	3063.33	1623.15	3163.33	1677.30	3263.33	1731.73	3363.33	1786.39	3463.33	38
39	1570.12	3065.00	1624.04	3165.00	1678.19	3265.00	1732.62	3365.00	1787.31	3465.00	39
40	1571.01	3066.67	1624.93	3166.67	1679.07	3266.67	1733.51	3366.67	1788.22	3466.67	40
41	1571.93	3068.33	1625.82	3168.33	1679.99	3268.33	1734.42	3368.33	1789.14	3468.33	41
42	1572.85	3070.00	1626.70	3170.00	1680.91	3270.00	1735.34	3370.00	1790.06	3470.00	42
43	1573.73	3071.67	1627.62	3171.67	1681.80	3271.67	1736.26	3371.67	1790.97	3471.67	43
44	1574.62	3073.33	1628.54	3173.33	1682.68	3273.33	1737.17	3373.33	1791.89	3473.33	44
45	1575.51	3075.00	1629.43	3175.00	1683.60	3275.00	1738.09	3375.00	1792.81	3475.00	45
46	1576.40	3076.67	1630.31	3176.67	1684.52	3276.67	1739.01	3376.67	1793.72	3476.67	46
47	1577.32	3078.33	1631.23	3178.33	1685.43	3278.33	1739.89	3378.33	1794.64	3478.33	47
48	1578.23	3080.00	1632.15	3180.00	1686.35	3280.00	1740.78	3380.00	1795.56	3480.00	48
49	1579.12	3081.67	1633.04	3181.67	1687.24	3281.67	1741.70	3381.67	1796.47	3481.67	49
50	1580.01	3083.33	1633.92	3183.33	1688.13	3283.33	1742.62	3383.33	1797.39	3483.33	50
51	1580.90	3085.00	1634.84	3185.00	1689.04	3285.00	1743.53	3385.00	1798.31	3485.00	51
52	1581.78	3086.67	1635.76	3186.67	1689.96	3286.67	1744.45	3386.67	1799.22	3486.67	52
53	1582.67	3088.33	1636.65	3188.33	1690.85	3288.33	1745.37	3388.33	1800.14	3488.33	53
54	1583.56	3090.00	1637.53	3190.00	1691.74	3290.00	1746.28	3390.00	1801.06	3490.00	54
55	1584.48	3091.67	1638.45	3191.67	1692.65	3291.67	1747.17	3391.67	1801.97	3491.67	55
56	1585.39	3093.33	1639.37	3193.33	1693.57	3293.33	1748.06	3393.33	1802.89	3493.33	56
57	1586.28	3095.00	1640.26	3195.00	1694.49	3295.00	1748.98	3395.00	1803.81	3495.00	57
58	1587.17	3096.67	1641.14	3196.67	1695.40	3296.67	1749.89	3396.67	1804.73	3496.67	58
59	1588.06	3098.33	1642.06	3198.33	1696.29	3298.33	1750.81	3398.33	1805.64	3498.33	59

TABLE 53.—*Continued*

TANGENTS AND ARCS OF A ONE-DEGREE CURVE

	Δ										
	35°		36°		37°		38°		39°		
M	Tan	Arc	Tan	Arc	Tan	Arc	Tan	Arc	Tan	Arc	M
0	1806.56	3500.00	1861.68	3600.00	1917.14	3700.00	1972.89	3800.00	2028.98	3900.00	0
1	1807.48	3501.67	1862.59	3601.67	1918.06	3701.67	1973.81	3801.67	2029.93	3901.67	1
2	1808.39	3503.33	1863.51	3603.33	1918.97	3703.33	1974.72	3803.33	2030.87	3903.33	2
3	1809.31	3505.00	1864.43	3605.00	1919.89	3705.00	1975.67	3805.00	2031.79	3905.00	3
4	1810.23	3506.67	1865.34	3606.67	1920.81	3706.67	1976.61	3806.67	2032.71	3906.67	4
5	1811.14	3508.33	1866.26	3608.33	1921.75	3708.33	1977.53	3808.33	2033.65	3908.33	5
6	1812.06	3510.00	1867.18	3610.00	1922.70	3710.00	1978.45	3810.00	2034.60	3910.00	6
7	1812.98	3511.67	1868.12	3611.67	1923.62	3711.67	1979.39	3811.67	2035.54	3911.67	7
8	1813.89	3513.33	1869.07	3613.33	1924.53	3713.33	1980.34	3813.33	2036.49	3913.33	8
9	1814.81	3515.00	1869.99	3615.00	1925.45	3715.00	1981.28	3815.00	2037.43	3915.00	9
10	1815.73	3516.67	1870.90	3616.67	1926.37	3716.67	1982.23	3816.67	2038.38	3916.67	10
11	1816.64	3518.33	1871.82	3618.33	1927.31	3718.33	1983.15	3818.33	2039.30	3918.33	11
12	1817.56	3520.00	1872.74	3620.00	1928.26	3720.00	1984.06	3820.00	2040.21	3920.00	12
13	1818.48	3521.67	1873.55	3621.67	1929.17	3721.67	1985.01	3821.67	2041.16	3921.67	13
14	1819.39	3523.33	1874.57	3623.33	1930.09	3723.33	1985.95	3823.33	2042.10	3923.33	14
15	1820.31	3525.00	1875.49	3625.00	1931.01	3725.00	1986.87	3825.00	2043.05	3925.00	15
16	1821.23	3526.67	1876.40	3626.67	1931.92	3726.67	1987.79	3826.67	2044.00	3926.67	16
17	1822.14	3528.33	1877.35	3628.33	1932.87	3728.33	1988.73	3828.33	2044.94	3928.33	17
18	1823.06	3530.00	1878.29	3630.00	1933.81	3730.00	1989.68	3830.00	2045.89	3930.00	18
19	1823.98	3531.67	1879.21	3631.67	1934.73	3731.67	1990.60	3831.67	2046.83	3931.67	19
20	1824.89	3533.33	1880.13	3633.33	1935.65	3733.33	1991.51	3833.33	2047.78	3933.33	20
21	1825.81	3535.00	1881.04	3635.00	1936.59	3735.00	1992.46	3835.00	2048.69	3935.00	21
22	1826.73	3536.67	1881.96	3636.67	1937.54	3736.67	1993.40	3836.67	2049.61	3936.67	22
23	1827.64	3538.33	1882.88	3638.33	1938.46	3738.33	1994.35	3838.33	2050.56	3938.33	23
24	1828.56	3540.00	1883.79	3640.00	1939.37	3740.00	1995.29	3840.00	2051.50	3940.00	24
25	1829.48	3541.67	1884.74	3641.67	1940.32	3741.67	1996.21	3841.67	2052.45	3941.67	25
26	1830.39	3543.33	1885.69	3643.33	1941.26	3743.33	1997.13	3843.33	2053.39	3943.33	26
27	1831.31	3545.00	1886.60	3645.00	1942.18	3745.00	1998.07	3845.00	2054.34	3945.00	27
28	1832.23	3546.67	1887.52	3646.67	1943.10	3746.67	1999.02	3846.67	2055.28	3946.67	28
29	1833.14	3548.33	1888.44	3648.33	1944.01	3748.33	1999.96	3848.33	2056.23	3948.33	29

TANGENTS AND ARCS OF A ONE-DEGREE CURVE

	Δ										
	35°		36°		37°		38°		39°		
M	Tan	Arc	Tan	Arc	Tan	Arc	Tan	Arc	Tan	Arc	M
30	1834.06	3550.00	1889.35	3650.00	1944.93	3750.00	2000.91	3850.00	2057.17	3950.00	30
31	1834.98	3551.67	1890.27	3651.67	1945.88	3751.67	2001.83	3851.67	2058.12	3951.67	31
32	1835.89	3553.33	1891.19	3653.33	1946.82	3753.33	2002.74	3853.33	2059.06	3953.33	32
33	1836.81	3555.00	1892.13	3655.00	1947.74	3755.00	2003.69	3855.00	2059.98	3955.00	33
34	1837.73	3556.67	1893.08	3656.67	1948.65	3756.67	2004.63	3856.67	2060.90	3956.67	34
35	1838.64	3558.33	1893.99	3658.33	1949.60	3758.33	2005.58	3858.33	2061.84	3958.33	35
36	1839.56	3560.00	1894.91	3660.00	1950.54	3760.00	2006.52	3860.00	2062.79	3960.00	36
37	1840.51	3561.67	1895.83	3661.67	1951.46	3761.67	2007.44	3861.67	2063.73	3961.67	37
38	1841.45	3563.33	1896.74	3663.33	1952.38	3763.33	2008.36	3863.33	2064.68	3963.33	38
39	1842.37	3565.00	1897.66	3665.00	1953.32	3765.00	2009.30	3865.00	2065.62	3965.00	39
40	1843.29	3566.67	1898.58	3666.67	1954.27	3766.67	2010.25	3866.67	2066.57	3966.67	40
41	1844.20	3568.33	1899.52	3668.33	1955.19	3768.33	2011.19	3868.33	2067.52	3968.33	41
42	1845.12	3570.00	1900.47	3670.00	1956.10	3770.00	2012.14	3870.00	2068.46	3970.00	42
43	1846.04	3571.67	1901.38	3671.67	1957.05	3771.67	2013.06	3871.67	2069.41	3971.67	43
44	1846.95	3573.33	1902.30	3673.33	1957.99	3773.33	2013.97	3873.33	2070.35	3973.33	44
45	1847.87	3575.00	1903.22	3675.00	1958.91	3775.00	2014.92	3875.00	2071.30	3975.00	45
46	1848.79	3576.67	1904.13	3676.67	1959.83	3776.67	2015.86	3876.67	2072.24	3976.67	46
47	1849.70	3578.33	1905.08	3678.33	1960.77	3778.33	2016.81	3878.33	2073.16	3978.33	47
48	1850.62	3580.00	1906.03	3680.00	1961.72	3780.00	2017.75	3880.00	2074.08	3980.00	48
49	1851.54	3581.67	1906.94	3681.67	1962.63	3781.67	2018.67	3881.67	2075.02	3981.67	49
50	1852.45	3583.33	1907.86	3683.33	1963.55	3783.33	2019.59	3883.33	2075.97	3983.33	50
51	1853.37	3585.00	1908.78	3685.00	1964.50	3785.00	2020.53	3885.00	2076.91	3985.00	51
52	1854.29	3586.67	1909.69	3686.67	1965.44	3786.67	2021.48	3886.67	2077.86	3986.67	52
53	1855.23	3588.33	1910.64	3688.33	1966.36	3788.33	2022.42	3888.33	2078.80	3988.33	53
54	1856.18	3590.00	1911.58	3690.00	1967.28	3790.00	2023.37	3890.00	2079.75	3990.00	54
55	1857.09	3591.67	1912.50	3691.67	1968.22	3791.67	2024.29	3891.67	2080.69	3991.67	55
56	1858.01	3593.33	1913.42	3693.33	1969.17	3793.33	2025.20	3893.33	2081.64	3993.33	56
57	1858.93	3595.00	1914.33	3695.00	1970.08	3795.00	2026.15	3895.00	2082.58	3995.00	57
58	1859.84	3596.67	1915.25	3696.67	1971.00	3796.67	2027.09	3896.67	2083.53	3996.67	58
59	1860.76	3598.33	1916.20	3698.33	1971.94	3798.33	2028.04	3898.33	2084.48	3998.33	59

TABLE 53.—*Continued*

TANGENTS AND ARCS OF A ONE-DEGREE CURVE

	Δ										
	40°		41°		42°		43°		44°		
M	Tan	Arc	Tan	Arc	Tan	Arc	Tan	Arc	Tan	Arc	M
0	2085.42	4000.00	2142.20	4100.00	2199.38	4200.00	2256.97	4300.00	2314.95	4400.00	0
1	2086.37	4001.67	2143.18	4101.67	2200.36	4201.67	2257.94	4301.67	2315.90	4401.67	1
2	2087.31	4003.33	2144.15	4103.33	2201.33	4203.33	2258.91	4303.33	2316.84	4403.33	2
3	2088.26	4005.00	2145.10	4105.00	2202.28	4205.00	2259.86	4305.00	2317.82	4405.00	3
4	2089.20	4006.67	2146.04	4106.67	2203.22	4206.67	2260.81	4306.67	2318.79	4406.67	4
5	2090.15	4008.33	2146.99	4108.33	2204.20	4208.33	2261.78	4308.33	2319.76	4408.33	5
6	2091.09	4010.00	2147.93	4110.00	2205.17	4210.00	2262.75	4310.00	2320.74	4410.00	6
7	2092.04	4011.67	2148.88	4111.67	2206.12	4211.67	2263.73	4311.67	2321.71	4411.67	7
8	2092.98	4013.33	2149.82	4113.33	2207.06	4213.33	2264.70	4313.33	2322.69	4413.33	8
9	2093.93	4015.00	2150.77	4115.00	2208.01	4215.00	2265.65	4315.00	2323.66	4415.00	9
10	2094.87	4016.67	2151.71	4116.67	2208.95	4216.67	2266.59	4316.67	2324.63	4416.67	10
11	2095.82	4018.33	2152.69	4118.33	2209.93	4218.33	2267.57	4318.33	2325.61	4418.33	11
12	2096.77	4020.00	2153.66	4120.00	2210.90	4220.00	2268.54	4320.00	2326.58	4420.00	12
13	2097.71	4021.67	2154.61	4121.67	2211.85	4221.67	2269.49	4321.67	2327.56	4421.67	13
14	2098.66	4023.33	2155.55	4123.33	2212.79	4223.33	2270.43	4323.33	2328.53	4423.33	14
15	2099.60	4025.00	2156 50	4125.00	2213.76	4225.00	2271.41	4325.00	2329.50	4425.00	15
16	2100.55	4026.67	2157.44	4126.67	2214.74	4226.67	2272.38	4326.67	2330.48	4426.67	16
17	2101.49	4028.33	2158.39	4128.33	2215.68	4228.33	2273.35	4328.33	2331.42	4428.33	17
18	2102.44	4030.00	2159.33	4130.00	2216.63	4230.00	2274.33	4330.00	2332.37	4430.00	18
19	2103.38	4031.67	2160.28	4131.67	2217.60	4231.67	2275.27	4331.67	2333.34	4431.67	19
20	2104.33	4033.33	2161.22	4133.33	2218.58	4233.33	2276.22	4333.33	2334.32	4433.33	20
21	2105.27	4035.00	2162.20	4135.00	2219.52	4235.00	2277.19	4335.00	2335.29	4435.00	21
22	2106.22	4036.67	2163.17	4136.67	2220.47	4236.67	2278.17	4336.67	2336.26	4436.67	22
23	2107.16	4038.33	2164.12	4138.33	2221.41	4238.33	2279.14	4338.33	2337.24	4438.33	23
24	2108.11	4040.00	2165.06	4140.00	2222.36	4240.00	2280.11	4340.00	2338.21	4440.00	24
25	2109.06	4041.67	2166.01	4141.67	2223.33	4241.67	2281.09	4341.67	2339.19	4441.67	25
26	2110.00	4043.33	2166.95	4143.33	2224.31	4243.33	2282.06	4343.33	2340.16	4443.33	26
27	2110.95	4045.00	2167.90	4145.00	2225.25	4245.00	2283.01	4345.00	2341.13	4445.00	27
28	2111.89	4046.67	2168.84	4146.67	2226.20	4246.67	2283.95	4346.67	2342.11	4446.67	28
29	2112.84	4048.33	2169.82	4148.33	2227.17	4248.33	2284.93	4348.33	2343.08	4448.33	29

TANGENTS AND ARCS OF A ONE-DEGREE CURVE

	Δ										
	40°		41°		42°		43°		44°		
M	Tan	Arc	Tan	Arc	Tan	Arc	Tan	Arc	Tan	Arc	M
30	2113.78	4050.00	2170.79	4150.00	2228.15	4250.00	2285.90	4350.00	2344.06	4450.00	30
31	2114.73	4051.67	2171.74	4151.67	2229.09	4251.67	2286.88	4351.67	2345.03	4451.67	31
32	2115.67	4053.33	2172.68	4153.33	2230.04	4253.33	2287.85	4353.33	2346.01	4453.33	32
33	2116.62	4055.00	2173.63	4155.00	2231.01	4255.00	2288.79	4355.00	2346.98	4455.00	33
34	2117.56	4056.67	2174.57	4156.67	2231.99	4256.67	2289.74	4356.67	2347.95	4456.67	34
35	2118.51	4058.33	2175.52	4158.33	2232.93	4258.33	2290.71	4358.33	2348.93	4458.33	35
36	2119.45	4060.00	2176.46	4160.00	2233.88	4260.00	2291.69	4360.00	2349.90	4460.00	36
37	2120.40	4061.67	2177.44	4161.67	2234.85	4261.67	2292.66	4361.67	2350.88	4461.67	37
38	2121.35	4063.33	2178.41	4163.33	2235.82	4263.33	2293.64	4363.33	2351.85	4463.33	38
39	2122.29	4065.00	2179.36	4165.00	2236.77	4265.00	2294.61	4365.00	2352.82	4465.00	39
40	2123.24	4066.67	2180.30	4166.67	2237.71	4266.67	2295.58	4366.67	2353.80	4466.67	40
41	2124.18	4068.33	2181.25	4168.33	2238.69	4268.33	2296.53	4368.33	2354.77	4468.33	41
42	2125.13	4070.00	2182.19	4170.00	2239.66	4270.00	2297.48	4370.00	2355.75	4470.00	42
43	2126.07	4071.67	2183.17	4171.67	2240.61	4271.67	2298.45	4371.67	2356.72	4471.67	43
44	2127.02	4073.33	2184.14	4173.33	2241.55	4273.33	2299.42	4373.33	2357.69	4473.33	44
45	2127.99	4075.00	2185.09	4175.00	2242.53	4275.00	2300.40	4375.00	2358.67	4475.00	45
46	2128.97	4076.67	2186.03	4176.67	2243.50	4276.67	2301.37	4376.67	2359.64	4476.67	46
47	2129.91	4078.33	2186.98	4178.33	2244.48	4278.33	2302.35	4378.33	2360.62	4478.33	47
48	2130.86	4080.00	2187.92	4180.00	2245.45	4280.00	2303.32	4380.00	2361.59	4480.00	48
49	2131.80	4081.67	2188.90	4181.67	2246.40	4281.67	2304.29	4381.67	2362.56	4481.67	49
50	2132.75	4083.33	2189.87	4183.33	2247.34	4283.33	2305.27	4383.33	2363.54	4483.33	50
51	2133.69	4085.00	2190.82	4185.00	2248.31	4285.00	2306.21	4385.00	2364.51	4485.00	51
52	2134.64	4086.67	2191.76	4186.67	2249.29	4286.67	2307.16	4386.67	2365.49	4486.67	52
53	2135.58	4088.33	2192.71	4188.33	2250.23	4288.33	2308.13	4388.33	2366.46	4488.33	53
54	2136.53	4090.00	2193.65	4190.00	2251.18	4290.00	2309.11	4390.00	2367.43	4490.00	54
55	2137.47	4091.67	2194.63	4191.67	2252.15	4291.67	2310.08	4391.67	2368.41	4491.67	55
56	2138.42	4093.33	2195.60	4193.33	2253.13	4293.33	2311.05	4393.33	2369.38	4493.33	56
57	2139.37	4095.00	2196.55	4195.00	2254.07	4295.00	2312.03	4395.00	2370.36	4495.00	57
58	2140.31	4096.67	2197.49	4196.67	2255.02	4296.67	2313.00	4396.67	2371.33	4496.67	58
59	2141.26	4098.33	2198.44	4198.33	2255.99	4298.33	2313.98	4398.33	2372.30	4498.33	59

TABLE 53. — *Continued*

TANGENTS AND ARCS OF A ONE-DEGREE CURVE

	Δ										
	45°		46°		47°		48°		49°		
M	Tan	Arc	Tan	Arc	Tan	Arc	Tan	Arc	Tan	Arc	M
0	2373.28	4500.00	2432.06	4600.00	2491.31	4700.00	2551.01	4800.00	2611.17	4900.00	0
1	2374.25	4501.67	2433.07	4601.67	2492.31	4701.67	2552.01	4801.67	2612.18	4901.67	1
2	2375.23	4503.33	2434.07	4603.33	2493.31	4703.33	2553.02	4803.33	2613.18	4903.33	2
3	2376.23	4505.00	2435.04	4605.00	2494.29	4705.00	2554.02	4805.00	2614.18	4905.00	3
4	2377.23	4506.67	2436.02	4606.67	2495.26	4706.67	2555.02	4806.67	2615.18	4906.67	4
5	2378.21	4508.33	2437.02	4608.33	2496.27	4708.33	2556.00	4808.33	2616.19	4908.33	5
6	2379.18	4510.00	2438.02	4610.00	2497.27	4710.00	2556.97	4810.00	2617.19	4910.00	6
7	2380.15	4511.67	2439.00	4611.67	2498.27	4711.67	2557.97	4811.67	2618.19	4911.67	7
8	2381.13	4513.33	2439.97	4613.33	2499.27	4713.33	2558.98	4813.33	2619.19	4913.33	8
9	2382.10	4515.00	2440.95	4615.00	2500.25	4715.00	2559.98	4815.00	2620.20	4915.00	9
10	2383.08	4516.67	2441.92	4616.67	2501.22	4716.67	2560.98	4816.67	2621.20	4916.67	10
11	2384.05	4518.33	2442.92	4618.33	2502.22	4718.33	2561.98	4818.33	2622.23	4918.33	11
12	2385.02	4520.00	2443.92	4620.00	2503.23	4720.00	2562.99	4820.00	2623.26	4920.00	12
13	2386.00	4521.67	2444.90	4621.67	2504.23	4721.67	2563.99	4821.67	2624.27	4921.67	13
14	2386.97	4523.33	2445.87	4623.33	2505.23	4723.33	2564.99	4823.33	2625.27	4923.33	14
15	2387.95	4525.00	2446.85	4625.00	2506.21	4725.00	2566.00	4825.00	2626.27	4925.00	15
16	2388.92	4526.67	2447.82	4626.67	2507.18	4726.67	2567.00	4826.67	2627.27	4926.67	16
17	2389.89	4528.33	2448.82	4628.33	2508.18	4728.33	2568.00	4828.33	2628.28	4928.33	17
18	2390.87	4530.00	2449.83	4630.00	2509.19	4730.00	2569.00	4830.00	2629.28	4930.00	18
19	2391.87	4531.67	2450.80	4631.67	2510.19	4731.67	2570.01	4831.67	2630.28	4931.67	19
20	2392.87	4533.33	2451.77	4633.33	2511.19	4733.33	2571.01	4833.33	2631.28	4933.33	20
21	2393.85	4535.00	2452.78	4635.00	2512.17	4735.00	2572.01	4835.00	2632.32	4935.00	21
22	2394.82	4536.67	2453.78	4636.67	2513.14	4736.67	2573.01	4836.67	2633.35	4936.67	22
23	2395.80	4538.33	2454.75	4638.33	2514.14	4738.33	2574.02	4838.33	2634.35	4938.33	23
24	2396.77	4540.00	2455.73	4640.00	2515.14	4740.00	2575.02	4840.00	2635.35	4940.00	24
25	2397.74	4541.67	2456.70	4641.67	2516.15	4741.67	2576.02	4841.67	2636.36	4941.67	25
26	2398.72	4543.33	2457.68	4643.33	2517.15	4743.33	2577.02	4843.33	2637.36	4943.33	26
27	2399.69	4545.00	2458.68	4645.00	2518.12	4745.00	2578.03	4845.00	2638.36	4945.00	27
28	2400.67	4546.67	2459.68	4646.67	2519.10	4746.67	2579.03	4846.67	2639.36	4946.67	28
29	2401.64	4548.33	2460.66	4648.33	2520.10	4748.33	2580.03	4848.33	2640.39	4948.33	29

TANGENTS AND ARCS OF A ONE-DEGREE CURVE

	Δ										
	45°		46°		47°		48°		49°		
M	Tan	Arc	Tan	Arc	Tan	Arc	Tan	Arc	Tan	Arc	M
30	2402.61	4550.00	2461.63	4650.00	2521.10	4750.00	2581.04	4850.00	2641.43	4950.00	30
31	2403.62	4551.67	2462.63	4651.67	2522.11	4751.67	2582.04	4851.67	2642.43	4951.67	31
32	2404.62	4553.33	2463.63	4653.33	2523.11	4753.33	2583.04	4853.33	2643.43	4953.33	32
33	2405.59	4555.00	2464.61	4655.00	2524.11	4755.00	2584.04	4855.00	2644.43	4955.00	33
34	2406.57	4556.67	2465.58	4656.67	2525.11	4756.67	2585.05	4856.67	2645.44	4956.67	34
35	2407.54	4558.33	2466.59	4658.33	2526.09	4758.33	2586.05	4858.33	2646.44	4958.33	35
36	2408.52	4560.00	2467.59	4660.00	2527.06	4760.00	2587.05	4860.00	2647.44	4960.00	36
37	2409.49	4561.67	2468.56	4661.67	2528.06	4761.67	2588.05	4861.67	2648.47	4961.67	37
38	2410.46	4563.33	2469.54	4663.33	2529.07	4763.33	2589.06	4863.33	2649.50	4963.33	38
39	2411.47	4565.00	2470.54	4665.00	2530.07	4765.00	2590.06	4865.00	2650.51	4965.00	39
40	2412.47	4566.67	2471.54	4666.67	2531.07	4766.67	2591.06	4866.67	2651.51	4966.67	40
41	2413.44	4568.33	2472.52	4668.33	2532.08	4768.33	2592.07	4868.33	2652.51	4968.33	41
42	2414.42	4570.00	2473.49	4670.00	2533.08	4770.00	2593.07	4870.00	2653.52	4970.00	42
43	2415.39	4571.67	2474.49	4671.67	2534.05	4771.67	2594.07	4871.67	2654.55	4971.67	43
44	2416.37	4573.33	2475.50	4673.33	2535.03	4773.33	2595.07	4873.33	2655.58	4973.33	44
45	2417.34	4575.00	2476.47	4675.00	2536.03	4775.00	2596.08	4875.00	2656.58	4975.00	45
46	2418.31	4576.67	2477.44	4676.67	2537.03	4776.67	2597.08	4876.67	2657.58	4976.67	46
47	2419.32	4578.33	2478.45	4678.33	2538.03	4778.33	2598.08	4878.33	2658.59	4978.33	47
48	2420.32	4580.00	2479.45	4680.00	2539.04	4780.00	2599.08	4880.00	2659.59	4980.00	48
49	2421.29	4581.67	2480.42	4681.67	2540.04	4781.67	2600.09	4881.67	2660.62	4981.67	49
50	2422.27	4583.33	2481.40	4683.33	2541.04	4783.33	2601.09	4883.33	2661.65	4983.33	50
51	2423.24	4585.00	2482.40	4685.00	2542.05	4785.00	2602.09	4885.00	2662.65	4985.00	51
52	2424.21	4586.67	2483.40	4686.67	2543.05	4786.67	2603.09	4886.67	2663.66	4986.67	52
53	2425.22	4588.33	2484.40	4688.33	2544.02	4788.33	2604.10	4888.33	2664.69	4988.33	53
54	2426.22	4590.00	2485.41	4690.00	2545.00	4790.00	2605.10	4890.00	2665.72	4990.00	54
55	2427.19	4591.67	2486.38	4691.67	2546.00	4791.67	2606.10	4891.67	2666.72	4991.67	55
56	2428.17	4593.33	2487.36	4693.33	2547.00	4793.33	2607.11	4893.33	2667.73	4993.33	56
57	2429.14	4595.00	2488.36	4695.00	2548.00	4795.00	2608.14	4895.00	2668.73	4995.00	57
58	2430.12	4596.67	2489.36	4696.67	2549.01	4796.67	2609.17	4896.67	2669.73	4996.67	58
59	2431.09	4598.33	2490.34	4698.33	2550.01	4798.33	2610.17	4898.33	2670.76	4998.33	59

TABLE 53. — *Continued*

TANGENTS AND ARCS OF A ONE-DEGREE CURVE

	Δ										
	50°		51°		52°		53°		54°		
M	Tan	Arc	Tan	Arc	Tan	Arc	Tan	Arc	Tan	Arc	M
0	2671.79	5000.00	2732.93	5100.00	2794.52	5200.00	2856.69	5300.00	2919.43	5400.00	0
1	2672.80	5001.67	2733.93	5101.67	2795.55	5201.67	2857.72	5301.67	2920.46	5401.67	1
2	2673.80	5003.33	2734.93	5103 33	2796.58	5203.33	2858.75	5303.33	2921.49	5403.33	2
3	2674.83	5005.00	2735.97	5105.00	2797.62	5205.00	2859.81	5305.00	2922.55	5405.00	3
4	2675.86	5006.67	2737.00	5106.67	2798.65	5206.67	2860.87	5306.67	2923.61	5406.67	4
5	2676.86	5008.33	2738.03	5108.33	2799.68	5208.33	2861.90	5308.33	2924.67	5408.33	5
6	2677.87	5010.00	2739.06	5110.00	2800.71	5210.00	2862.93	5310.00	2925.73	5410.00	6
7	2678.87	5011.67	2740.06	5111.67	2801.74	5211.67	2863.99	5311.67	2926.76	5411.67	7
8	2679.87	5013.33	2741.06	5113.33	2802.77	5213.33	2865.05	5313.33	2927.79	5413.33	8
9	2680.90	5015.00	2742.10	5115.00	2803.80	5215.00	2866.09	5315.00	2928.85	5415.00	9
10	2681.93	5016.67	2743.13	5116.67	2804.84	5216.67	2867.12	5316.67	2929.91	5416.67	10
11	2682.94	5018.33	2744.16	5118.33	2805.87	5218.33	2868.15	5318.33	2930.97	5418.33	11
12	2683.94	5020.00	2745.19	5120.00	2806.90	5220.00	2869.18	5320.00	2932.03	5420.00	12
13	2684.97	5021.67	2746.22	5121.67	2807.96	5221.67	2870.24	5321.67	2933.07	5421.67	13
14	2686.00	5023.33	2747.25	5123.33	2809.02	5223.33	2871.30	5323.33	2934.10	5423.33	14
15	2687.01	5025.00	2748.28	5125.00	2810.05	5225.00	2872.33	5325.00	2935.16	5425.00	15
16	2688.01	5026.67	2749.32	5126.67	2811.08	5226.67	2873.36	5326.67	2936.22	5426.67	16
17	2689.04	5028.33	2750.32	5128.33	2812.11	5228.33	2874.39	5328.33	2937.28	5428.33	17
18	2690.07	5030.00	2751.32	5130.00	2813.14	5230.00	2875.42	5330.00	2938.34	5430.00	18
19	2691.07	5031.67	2752.35	5131.67	2814.17	5231.67	2876.48	5331.67	2939.37	5431.67	19
20	2692.08	5033.33	2753.38	5133.33	2815.21	5233.33	2877.54	5333.33	2940.40	5433.33	20
21	2693.11	5035.00	2754.41	5135.00	2816.24	5235.00	2878.58	5335.00	2941.46	5435.00	21
22	2694.14	5036.67	2755.45	5136.67	2817.27	5236.67	2879.61	5336.67	2942.52	5436.67	22
23	2695.14	5038.33	2756.48	5138.33	2818.30	5238.33	2880.67	5338.33	2943.58	5438.33	23
24	2696.14	5040.00	2757.51	5140.00	2819.33	5240.00	2881.73	5340.00	2944.64	5440.00	24
25	2697.18	5041.67	2758.54	5141.67	2820.36	5241.67	2882.76	5341.67	2945.70	5441.67	25
26	2698.21	5043.33	2759.57	5143.33	2821.39	5243.33	2883.79	5343.33	2946.76	5443.33	26
27	2699.24	5045.00	2760.57	5145.00	2822.43	5245.00	2884.85	5345.00	2947.82	5445.00	27
28	2700.27	5046.67	2761.58	5146.67	2823.46	5246.67	2885.91	5346.67	2948.88	5446.67	28
29	2701.27	5048.33	2762.61	5148.33	2824.52	5248.33	2886.94	5348.33	2949.91	5448.33	29

TANGENTS AND ARCS OF A ONE-DEGREE CURVE

	Δ										
	50°		51°		52°		53°		54°		
M	Tan	Arc	Tan	Arc	Tan	Arc	Tan	Arc	Tan	Arc	M
30	2702.27	5050.00	2763.64	5150.00	2825.58	5250.00	2887.97	5350.00	2950.94	5450.00	30
31	2703.31	5051.67	2764.67	5151.67	2826.61	5251.67	2889.03	5351.67	2952.00	5451.67	31
32	2704.34	5053.33	2765.70	5153.33	2827.64	5253.33	2890.09	5353.33	2953.06	5453.33	32
33	2705.34	5055.00	2766.73	5155.00	2828.67	5255.00	2891.12	5355.00	2954.12	5455.00	33
34	2706.34	5056.67	2767.76	5156.67	2829.70	5256.67	2892.16	5356.67	2955.18	5456.67	34
35	2707.37	5058.33	2768.80	5158.33	2830.73	5258.33	2893.22	5358.33	2956.24	5458.33	35
36	2708.41	5060.00	2769.83	5160.00	2831.76	5260.00	2894.28	5360.00	2957.30	5460.00	36
37	2709.41	5061.67	2770.86	5161.67	2832.80	5261.67	2895.31	5361.67	2958.36	5461.67	37
38	2710.41	5063.33	2771.89	5163.33	2833.83	5263.33	2896.34	5363.33	2959.42	5463.33	38
39	2711.44	5065.00	2772.92	5165.00	2834.86	5265.00	2897.40	5365.00	2960.48	5465.00	39
40	2712.47	5066.67	2773.95	5166.67	2835.89	5266.67	2898.46	5366.67	2961.54	5466.67	40
41	2713.50	5068.33	2774.98	5168.33	2836.95	5268.33	2899.49	5368.33	2962.57	5468.33	41
42	2714.54	5070.00	2776.02	5170.00	2838.01	5270.00	2900.52	5370.00	2963.60	5470.00	42
43	2715.54	5071.67	2777.05	5171.67	2839.04	5271.67	2901.58	5371.67	2964.66	5471.67	43
44	2716.54	5073.33	2778.08	5173.33	2840.07	5273.33	2902.64	5373.33	2965.72	5473.33	44
45	2717.57	5075.00	2779.08	5175.00	2841.10	5275.00	2903.67	5375.00	2966.78	5475.00	45
46	2718.60	5076.67	2780.08	5176.67	2842.14	5276.67	2904.70	5376.67	2967.84	5476.67	46
47	2719.61	5078.33	2781.11	5178.33	2843.17	5278.33	2905.76	5378.33	2968.90	5478.33	47
48	2720.61	5080.00	2782.15	5180.00	2844.20	5280.00	2906.82	5380.00	2969.96	5480.00	48
49	2721.64	5081.67	2783.18	5181.67	2845.26	5281.67	2907.85	5381.67	2971.02	5481.67	49
50	2722.67	5083.33	2784.21	5183.33	2846.32	5283.33	2908.89	5383.33	2972.08	5483.33	50
51	2723.70	5085.00	2785.24	5185.00	2847.35	5285.00	2909.95	5385.00	2973.14	5485.00	51
52	2724.74	5086.67	2786.27	5186.67	2848.38	5286.67	2911.01	5386.67	2974.20	5486.67	52
53	2725.74	5088.33	2787.30	5188.33	2849.41	5288.33	2912.07	5388.33	2975.26	5488.33	53
54	2726.74	5090.00	2788.33	5190.00	2850.44	5290.00	2913.13	5390.00	2976.32	5490.00	54
55	2727.77	5091.67	2789.37	5191.67	2851.50	5291.67	2914.16	5391.67	2977.38	5491.67	55
56	2728.80	5093.33	2790.40	5193.33	2852.56	5293.33	2915.19	5393.33	2978.44	5493.33	56
57	2729.83	5095.00	2791.43	5195.00	2853.59	5295.00	2916.25	5395.00	2979.50	5495.00	57
58	2730.87	5096.67	2792.46	5196.67	2854.63	5296.67	2917.31	5396.67	2980.56	5496.67	58
59	2731.90	5098.33	2793.49	5198.33	2855.66	5298.33	2918.37	5398.33	2981.62	5498.33	59

TABLE 53. — *Continued*

TANGENTS AND ARCS OF A ONE-DEGREE CURVE

	Δ										
	55°		56°		57°		58°		59°		
M	Tan	Arc	Tan	Arc	Tan	Arc	Tan	Arc	Tan	Arc	M
0	2982.68	5500.00	3046.51	5600.00	3110.97	5700.00	3176.00	5800.00	3241.66	5900.00	0
1	2983.74	5501.67	3047.57	5601.67	3112.03	5701.67	3177.09	5801.67	3242.78	5901.67	1
2	2984.80	5503.33	3048.63	5603.33	3113.09	5703.33	3178.18	5803.33	3243.90	5903.33	2
3	2985.86	5505.00	3049.72	5605.00	3114.18	5705.00	3179.27	5805.00	3244.99	5905.00	3
4	2986.92	5506.67	3050.81	5606.67	3115.27	5706.67	3180.36	5806.67	3246.08	5906.67	4
5	2987.98	5508.33	3051.87	5608.33	3116.36	5708.33	3181.45	5808.33	3247.19	5908.33	5
6	2989.04	5510.00	3052.93	5610.00	3117.45	5710.00	3182.53	5810.00	3248.31	5910.00	6
7	2990.10	5511.67	3053.99	5611.67	3118.51	5711.67	3183.62	5811.67	3249.40	5911.67	7
8	2991.16	5513.33	3055.05	5613.33	3119.57	5713.33	3184.71	5813.33	3250.49	5913.33	8
9	2992.22	5515.00	3056.14	5615.00	3120.65	5715.00	3185.80	5815.00	3251.58	5915.00	9
10	2993.28	5516.67	3057.25	5616.67	3121.74	5716.67	3186.89	5816.67	3252.67	5916.67	10
11	2994.34	5518.33	3058.29	5618.33	3122.83	5718.33	3187.98	5818.33	3253.78	5918.33	11
12	2995.40	5520.00	3059.35	5620.00	3123.92	5720.00	3189.07	5820.00	3254.90	5920.00	12
13	2996.46	5521.67	3060.41	5621.67	3125.01	5721.67	3190.15	5821.67	3255.99	5921.67	13
14	2997.52	5523.33	3061.47	5623.33	3126.10	5723.33	3191.24	5823.33	3257.08	5923.33	14
15	2998.58	5525.00	3062.56	5625.00	3127.16	5725.00	3192.36	5825.00	3258.19	5925.00	15
16	2999.64	5526.67	3063.64	5626.67	3128.22	5726.67	3193.48	5826.67	3259.31	5926.67	16
17	3000.70	5528.33	3064.70	5628.33	3129.31	5728.33	3194.57	5828.33	3260.40	5928.33	17
18	3001.76	5530.00	3065.76	5630.00	3130.39	5730.00	3195.65	5830.00	3261.49	5930.00	18
19	3002.82	5531.67	3066.85	5631.67	3131.48	5731.67	3196.74	5831.67	3262.61	5931.67	19
20	3003.88	5533.33	3067.94	5633.33	3132.57	5733.33	3197.83	5833.33	3263.72	5933.33	20
21	3004.94	5535.00	3069.00	5635.00	3133.66	5735.00	3198.92	5835.00	3264.81	5935.00	21
22	3006.00	5536.67	3070.06	5636.67	3134.75	5736.67	3200.01	5836.67	3265.90	5936.67	22
23	3007.06	5538.33	3071.15	5638.33	3135.81	5738.33	3201.10	5838.33	3267.02	5938.33	23
24	3008.12	5540.00	3072.24	5640.00	3136.87	5740.00	3202.19	5840.00	3268.14	5940.00	24
25	3009.18	5541.67	3073.30	5641.67	3137.96	5741.67	3203.28	5841.67	3269.25	5941.67	25
26	3010.24	5543.33	3074.36	5643.33	3139.05	5743.33	3204.36	5843.33	3270.37	5943.33	26
27	3011.30	5545.00	3075.42	5645.00	3140.13	5745.00	3205.45	5845.00	3271.46	5945.00	27
28	3012.36	5546.67	3076.48	5646.67	3141.22	5746.67	3206.54	5846.67	3272.55	5946.67	28
29	3013.45	5548.33	3077.57	5648.33	3142.31	5748.33	3207.66	5848.33	3273.66	5948.33	29

TANGENTS AND ARCS OF A ONE-DEGREE CURVE

	Δ										
	55°		56°		57°		58°		59°		
M	Tan	Arc	Tan	Arc	Tan	Arc	Tan	Arc	Tan	Arc	M
30	3014.54	5550.00	3078.66	5650.00	3143.40	5750.00	3208.78	5850.00	3274.78	5950.00	30
31	3015.60	5551.67	3079.72	5651.67	3144.49	5751.67	3209.86	5851.67	3275.87	5951.67	31
32	3016.66	5553.33	3080.78	5653.33	3145.58	5753.33	3210.95	5853.33	3276.96	5953.33	32
33	3017.72	5555.00	3081.86	5655.00	3146.67	5755.00	3212.04	5855.00	3278.08	5955.00	33
34	3018.78	5556.67	3082.95	5656.67	3147.76	5756.67	3213.13	5856.67	3279.19	5956.67	34
35	3019.84	5558.33	3084.01	5658.33	3148.82	5758.33	3214.22	5858.33	3280.31	5958.33	35
36	3020.90	5560.00	3085.07	5660.00	3149.88	5760.00	3215.31	5860.00	3281.43	5960.00	36
37	3021.96	5561.67	3086.16	5661.67	3150.96	5761.67	3216.42	5861.67	3282.52	5961.67	37
38	3023.02	5563.33	3087.25	5663.33	3152.05	5763.33	3217.54	5863.33	3283.61	5963.33	38
39	3024.08	5565.00	3088.34	5665.00	3153.14	5765.00	3218.63	5865.00	3284.72	5965.00	39
40	3025.14	5566.67	3089.43	5666.67	3154.23	5766.67	3219.72	5866.67	3285.84	5966.67	40
41	3026.23	5568.33	3090.49	5668.33	3155.32	5768.33	3220.81	5868.33	3286.93	5968.33	41
42	3027.32	5570.00	3091.55	5670.00	3156.41	5770.00	3221.90	5870.00	3288.02	5970.00	42
43	3028.38	5571.67	3092.64	5671.67	3157.50	5771.67	3222.99	5871.67	3289.13	5971.67	43
44	3029.44	5573.33	3093.72	5673.33	3158.58	5773.33	3224.07	5873.33	3290.25	5973.33	44
45	3030.50	5575.00	3094.78	5675.00	3159.67	5775.00	3225.19	5875.00	3291.37	5975.00	45
46	3031.56	5576.67	3095.84	5676.67	3160.76	5776.67	3226.31	5876.67	3292.49	5976.67	46
47	3032.62	5578.33	3096.93	5678.33	3161.85	5778.33	3227.40	5878.33	3293.60	5978.33	47
48	3033.68	5580.00	3098.02	5680.00	3162.94	5780.00	3228.49	5880.00	3294.72	5980.00	48
49	3034.77	5581.67	3099.08	5681.67	3164.03	5781.67	3229.57	5881.67	3295.81	5981.67	49
50	3035.86	5583.33	3100.14	5683.33	3165.12	5783.33	3230.66	5883.33	3296.90	5983.33	50
51	3036.92	5585.00	3101.23	5685.00	3166.20	5785.00	3231.78	5885.00	3298.02	5985.00	51
52	3037.98	5586.67	3102.32	5686.67	3167.29	5786.67	3232.90	5886.67	3299.13	5986.67	52
53	3039.04	5588.33	3103.41	5688.33	3168.38	5788.33	3233.99	5888.33	3300.25	5988.33	53
54	3040.09	5590.00	3104.50	5690.00	3169.47	5790.00	3235.07	5890.00	3301.37	5990.00	54
55	3041.15	5591.67	3105.56	5691.67	3170.56	5791.67	3236.19	5891.67	3302.46	5991.67	55
56	3042.21	5593.33	3106.62	5693.33	3171.65	5793.33	3237.31	5893.33	3303.54	5993.33	56
57	3043.30	5595.00	3107.70	5695.00	3172.74	5795.00	3238.40	5895.00	3304.66	5995.00	57
58	3044.39	5596.67	3108.79	5696.67	3173.83	5796.67	3239.49	5896.67	3305.78	5996.67	58
59	3045.45	5598.33	3109.88	5698.33	3174.91	5798.33	3240.58	5898.33	3306.90	5998.33	59

TABLE 53. — *Continued*

TANGENTS AND ARCS OF A ONE-DEGREE CURVE

	Δ										
	60°		61°		62°		63°		64°		
M	Tan	Arc	Tan	Arc	Tan	Arc	Tan	Arc	Tan	Arc	M
0	3308.01	6000.00	3375.05	6100.00	3442.72	6200.00	3511.13	6300.00	3580.29	6400.00	0
1	3309.13	6001.67	3376.17	6101.67	3443.86	6201.67	3512.28	6301.67	3581.43	6401.67	1
2	3310.25	6003.33	3377.28	6103.33	3445.01	6203.33	3513.42	6303.33	3582.58	6403.33	2
3	3311.37	6005.00	3378.40	6105.00	3446.13	6205.00	3514.57	6305.00	3583.75	6405.00	3
4	3312.48	6006.67	3379.52	6106.67	3447.24	6206.67	3515.71	6306.67	3584.93	6406.67	4
5	3313.57	6008.33	3380.64	6108.33	3448.39	6208.33	3516.86	6308.33	3586.07	6408.33	5
6	3314.66	6010.00	3381.75	6110.00	3449.54	6210.00	3518.01	6310.00	3587.22	6410.00	6
7	3315.78	6011.67	3382.87	6111.67	3450.68	6211.67	3519.15	6311.67	3588.39	6411.67	7
8	3316.89	6013.33	3383.99	6113.33	3451.83	6213.33	3520.30	6313.33	3589.57	6413.33	8
9	3318.01	6015.00	3385.13	6115.00	3452.94	6215.00	3521.44	6315.00	3590.71	6415.00	9
10	3319.13	6016.67	3386.28	6116.67	3454.06	6216.67	3522.59	6316.67	3591.86	6416.67	10
11	3320.25	6018.33	3387.40	6118.33	3455.21	6218.33	3523.73	6318.33	3593.03	6418.33	11
12	3321.36	6020.00	3388.52	6120.00	3456.35	6220.00	3524.88	6320.00	3594.21	6420.00	12
13	3322.48	6021.67	3389.63	6121.67	3457.50	6221.67	3526.06	6321.67	3595.36	6421.67	13
14	3323.60	6023.33	3390.75	6123.33	3458.65	6223.33	3527.23	6323.33	3596.50	6423.33	14
15	3324.72	6025.00	3391.87	6125.00	3459.76	6225.00	3528.38	6325.00	3597.68	6425.00	15
16	3325.83	6026.67	3392.98	6126.67	3460.88	6226.67	3529.52	6326.67	3598.85	6426.67	16
17	3326.95	6028.33	3394.13	6128.33	3462.03	6228.33	3530.67	6328.33	3600.03	6428.33	17
18	3328.07	6030.00	3395.28	6130.00	3463.17	6230.00	3531.81	6330.00	3601.20	6430.00	18
19	3329.18	6031.67	3396.39	6131.67	3464.32	6231.67	3532.96	6331.67	3602.35	6431.67	19
20	3330.30	6033.33	3397.51	6133.33	3465.46	6233.33	3534.11	6333.33	3603.49	6433.33	20
21	3331.39	6035.00	3398.63	6135.00	3466.58	6235.00	3535.25	6335.00	3604.67	6435.00	21
22	3332.48	6036.67	3399.75	6136.67	3467.70	6236.67	3536.40	6336.67	3605.84	6436.67	22
23	3333.60	6038.33	3400.89	6138.33	3468.84	6238.33	3537.54	6338.33	3606.99	6438.33	23
24	3334.71	6040.00	3402.04	6140.00	3469.99	6240.00	3538.69	6340.00	3608.13	6440.00	24
25	3335.83	6041.67	3403.15	6141.67	3471.14	6241.67	3539.84	6341.67	3609.31	6441.67	25
26	3336.95	6043.33	3404.27	6143.33	3472.28	6243.33	3540.98	6343.33	3610.48	6443.33	26
27	3338.07	6045.00	3405.39	6145.00	3473.43	6245.00	3542.16	6345.00	3611.66	6445.00	27
28	3339.18	6046.67	3406.51	6146.67	3474.57	6246.67	3543.33	6346.67	3612.83	6446.67	28
29	3340.30	6048.33	3407.65	6148.33	3475.69	6248.33	3544.48	6348.33	3613.98	6448.33	29

TANGENTS AND ARCS OF A ONE-DEGREE CURVE

	Δ										
	60°		61°		62°		63°		64°		
M	Tan	Arc	Tan	Arc	Tan	Arc	Tan	Arc	Tan	Arc	M
30	3341.42	6050.00	3408.80	6150.00	3476.81	6250.00	3545.62	6350.00	3615.12	6450.00	30
31	3342.53	6051.67	3409.92	6151.67	3477.95	6251.67	3546.77	6351.67	3616.30	6451.67	31
32	3343.65	6053.33	3411.03	6153.33	3479.10	6253.33	3547.91	6353.33	3617.47	6453.33	32
33	3344.77	6055.00	3412.18	6155.00	3480.25	6255.00	3549.06	6355.00	3618.65	6455.00	33
34	3345.89	6056.67	3413.32	6156.67	3481.39	6256.67	3550.21	6356.67	3619.82	6456.67	34
35	3347.00	6058.33	3414.44	6158.33	3482.54	6258.33	3551.38	6358.33	3620.97	6458.33	35
36	3348.12	6060.00	3415.56	6160.00	3483.68	6260.00	3552.55	6360.00	3622.11	6460.00	36
37	3349.24	6061.67	3416.68	6161.67	3484.83	6261.67	3553.70	6361.67	3623.29	6461.67	37
38	3350.36	6063.33	3417.79	6163.33	3485.98	6263.33	3554.85	6363.33	3624.46	6463.33	38
39	3351.47	6065.00	3418.94	6165.00	3487.12	6265.00	3555.99	6365.00	3625.64	6465.00	39
40	3352.59	6066.67	3420.09	6166.67	3488.27	6266.67	3557.14	6366.67	3626.81	6466.67	40
41	3353.71	6068.33	3421.20	6168.33	3489.41	6268.33	3558.31	6368.33	3627.99	6468.33	41
42	3354.82	6070.00	3422.32	6170.00	3490.56	6270.00	3559.49	6370.00	3629.16	6470.00	42
43	3355.94	6071.67	3423.47	6171.67	3491.68	6271.67	3560.63	6371.67	3630.31	6471.67	43
44	3357.06	6073.33	3424.61	6173.33	3492.79	6273.33	3561.78	6373.33	3631.45	6473.33	44
45	3358.21	6075.00	3425.73	6175.00	3493.94	6275.00	3562.93	6375.00	3632.63	6475.00	45
46	3359.35	6076.67	3426.85	6176.67	3495.09	6276.67	3564.07	6376.67	3633.80	6476.67	46
47	3360.47	6078.33	3427.99	6178.33	3496.23	6278.33	3565.25	6378.33	3634.98	6478.33	47
48	3361.59	6080.00	3429.14	6180.00	3497.38	6280.00	3566.42	6380.00	3636.15	6480.00	48
49	3362.70	6081.67	3430.26	6181.67	3498.52	6281.67	3567.57	6381.67	3637.33	6481.67	49
50	3363.82	6083.33	3431.37	6183.33	3499.67	6283.33	3568.71	6383.33	3638.50	6483.33	50
51	3364.94	6085.00	3432.52	6185.00	3500.82	6285.00	3569.86	6385.00	3639.67	6485.00	51
52	3366.05	6086.67	3433.66	6186.67	3501.96	6286.67	3571.00	6386.67	3640.85	6486.67	52
53	3367.17	6088.33	3434.78	6188.33	3503.11	6288.33	3572.18	6388.33	3641.99	6488.33	53
54	3368.29	6090.00	3435.90	6190.00	3504.25	6290.00	3573.35	6390.00	3643.14	6490.00	54
55	3369.41	6091.67	3437.05	6191.67	3505.40	6291.67	3574.50	6391.67	3644.32	6491.67	55
56	3370.52	6093.33	3438.19	6193.33	3506.55	6293.33	3575.65	6393.33	3645.19	6493.33	56
57	3371.64	6095.00	3439.31	6195.00	3507.69	6295.00	3576.79	6395.00	3646.66	6495.00	57
58	3372.76	6096.67	3440.43	6196.67	3508.84	6296.67	3577.94	6396.67	3647.84	6496.67	58
59	3373.90	6098.33	3441.57	6198.33	3509.98	6298.33	3579.11	6398.33	3649.01	6498.33	59

TABLE 53. — *Continued*

TANGENTS AND ARCS OF A ONE-DEGREE CURVE

	Δ										
	65°		66°		67°		68°		69°		
M	Tan	Arc	Tan	Arc	Tan	Arc	Tan	Arc	Tan	Arc	M
0	3650.19	6500.00	3720.89	6600.00	3792.40	6700.00	3864.71	6800.00	3937.87	6900.00	0
1	3651.36	6501.67	3722.07	6601.67	3793.57	6701.67	3865.91	6801.67	3939.11	6901.67	1
2	3652.54	6503.33	3723.24	6603.33	3794.75	6703.33	3867.11	6803.33	3940.34	6903.33	2
3	3653.71	6505.00	3724.44	6605.00	3795.95	6705.00	3868.34	6805.00	3941.57	6905.00	3
4	3654.89	6506.67	3725.65	6606.67	3797.15	6706.67	3869.58	6806.67	3942.80	6906.67	4
5	3656.06	6508.33	3726.82	6608.33	3798.36	6708.33	3870.78	6808.33	3944.03	6908.33	5
6	3657.24	6510.00	3728.00	6610.00	3799.56	6710.00	3871.98	6810.00	3945.27	6910.00	6
7	3658.41	6511.67	3729.17	6611.67	3800.76	6711.67	3873.19	6811.67	3946.50	6911.67	7
8	3659.58	6513.33	3730.35	6613.33	3801.97	6713.33	3874.39	6813.33	3947.73	6913.33	8
9	3660.76	6515.00	3731.55	6615.00	3803.17	6715.00	3875.62	6815.00	3948.93	6915.00	9
10	3661.93	6516.67	3732.75	6616.67	3804.37	6716.67	3876.85	6816.67	3950.14	6916.67	10
11	3663.11	6518.33	3733.93	6618.33	3805.58	6718.33	3878.06	6818.33	3951.37	6918.33	11
12	3664.28	6520.00	3735.10	6620.00	3806.78	6720.00	3879.26	6820.00	3952.60	6920.00	12
13	3665.46	6521.67	3736.30	6621.67	3807.98	6721.67	3880.49	6821.67	3953.83	6921.67	13
14	3666.63	6523.33	3737.51	6623.33	3809.19	6723.33	3881.72	6823.33	3955.06	6923.33	14
15	3667.81	6525.00	3738.68	6625.00	3810.39	6725.00	3882.93	6825.00	3956.29	6925.00	15
16	3668.98	6526.67	3739.86	6626.67	3811.59	6726.67	3884.13	6826.67	3957.53	6926.67	16
17	3670.16	6528.33	3741.06	6628.33	3812.80	6728.33	3885.33	6828.33	3958.76	6928.33	17
18	3671.33	6530.00	3742.26	6630.00	3814.00	6730.00	3886.54	6830.00	3959.99	6930.00	18
19	3672.51	6531.67	3743.44	6631.67	3815.20	6731.67	3887.77	6831.67	3961.22	6931.67	19
20	3673.68	6533.33	3744.61	6633.33	3816.41	6733.33	3889.00	6833.33	3962.45	6933.33	20
21	3674.85	6535.00	3745.82	6635.00	3817.61	6735.00	3890.20	6835.00	3963.69	6935.00	21
22	3676.03	6536.67	3747.02	6636.67	3818.81	6736.67	3891.41	6836.67	3964.92	6936.67	22
23	3677.20	6538.33	3748.19	6638.33	3820.01	6738.33	3892.64	6838.33	3966.15	6938.33	23
24	3678.38	6540.00	3749.37	6640.00	3821.22	6740.00	3893.87	6840.00	3967.38	6940.00	24
25	3679.55	6541.67	3750.57	6641.67	3822.42	6741.67	3895.07	6841.67	3968.61	6941.67	25
26	3680.73	6543.33	3751.77	6643.33	3823.62	6743.33	3896.28	6843.33	3969.85	6943.33	26
27	3681.90	6545.00	3752.95	6645.00	3824.83	6745.00	3897.51	6845.00	3971.08	6945.00	27
28	3683.08	6546.67	3754.12	6646.67	3826.03	6746.67	3898.74	6846.67	3972.31	6946.67	28
29	3684.25	6548.33	3755.33	6648.33	3827.23	6748.33	3899.79	6848.33	3973.54	6948.33	29

TANGENTS AND ARCS OF A ONE-DEGREE CURVE

	Δ										
	65°		66°		67°		68°		69°		
M	Tan	Arc	Tan	Arc	Tan	Arc	Tan	Arc	Tan	Arc	M
30	3685.43	6550.00	3756.53	6650.00	3828.44	6750.00	3901.20	6850.00	3974.77	6950.00	30
31	3686.60	6551.67	3757.71	6651.67	3829.64	6751.67	3902.41	6851.67	3976.03	6951.67	31
32	3687.77	6553.33	3758.88	6653.33	3830.84	6753.33	3903.61	6853.33	3977.29	6953.33	32
33	3688.95	6555.00	3760.08	6655.00	3832.05	6755.00	3904.84	6855.00	3978.53	6955.00	33
34	3690.12	6556.67	3761.29	6656.67	3833.25	6756.67	3906.07	6856.67	3979.76	6956.67	34
35	3691.33	6558.33	3762.49	6658.33	3834.45	6758.33	3907.28	6858.33	3980.99	6958.33	35
36	3692.53	6560.00	3763.69	6660.00	3835.66	6760.00	3908.48	6860.00	3982.22	6960.00	36
37	3693.70	6561.67	3764.87	6661.67	3836.86	6761.67	3909.71	6861.67	3983.45	6961.67	37
38	3694.88	6563.33	3766.04	6663.33	3838.06	6763.33	3910.94	6863.33	3984.69	6963.33	38
39	3696.05	6565.00	3767.24	6665.00	3839.27	6765.00	3912.18	6865.00	3985.92	6965.00	39
40	3697.23	6566.67	3768.45	6666.67	3840.47	6766.67	3913.41	6866.67	3987.15	6966.67	40
41	3698.40	6568.33	3769.65	6668.33	3841.70	6768.33	3914.61	6868.33	3988.38	6968.33	41
42	3699.58	6570.00	3770.85	6670.00	3842.93	6770.00	3915.81	6870.00	3989.61	6970.00	42
43	3700.75	6571.67	3772.03	6671.67	3844.14	6771.67	3917.05	6871.67	3990.87	6971.67	43
44	3701.93	6573.33	3773.20	6673.33	3845.34	6773.33	3918.28	6873.33	3992.13	6973.33	44
45	3703.13	6575.00	3774.41	6675.00	3846.54	6775.00	3919.51	6875.00	3993.37	6975.00	45
46	3704.33	6576.67	3775.61	6676.67	3847.75	6776.67	3920.74	6876.67	3994.60	6976.67	46
47	3705.51	6578.33	3776.81	6678.33	3848.95	6778.33	3921.95	6878.33	3995.83	6978.33	47
48	3706.68	6580.00	3778.02	6680.00	3850.15	6780.00	3923.15	6880.00	3997.06	6980.00	48
49	3707.86	6581.67	3779.22	6681.67	3851.36	6781.67	3924.38	6881.67	3998.29	6981.67	49
50	3709.03	6583.33	3780.42	6683.33	3852.56	6783.33	3925.61	6883.33	3999.52	6983.33	50
51	3710.21	6585.00	3781.60	6685.00	3853.79	6785.00	3926.84	6885.00	4000.76	6985.00	51
52	3711.38	6586.67	3782.77	6686.67	3855.02	6786.67	3928.08	6886.67	4001.99	6986.67	52
53	3712.58	6588.33	3783.98	6688.33	3856.23	6788.33	3929.31	6888.33	4003.25	6988.33	53
54	3713.79	6590.00	3785.18	6690.00	3857.43	6790.00	3930.54	6890.00	4004.51	6990.00	54
55	3714.96	6591.67	3786.38	6691.67	3858.63	6791.67	3931.74	6891.67	4005.74	6991.67	55
56	3716.14	6593.33	3787.59	6693.33	3859.84	6793.33	3932.95	6893.33	4006.97	6993.33	56
57	3717.31	6595.00	3788.79	6695.00	3861.07	6795.00	3934.18	6895.00	4008.21	6995.00	57
58	3718.49	6596.67	3789.99	6696.67	3862.30	6796.67	3935.41	6896.67	4009.44	6996.67	58
59	3719.69	6598.33	3791.19	6698.33	3863.50	6798.33	3936.64	6898.33	4010.70	6998.33	59

TABLE 53 — *Continued*

TANGENTS AND ARCS OF A ONE-DEGREE CURVE

	Δ										
	70°		71°		72°		73°		74°		
M	Tan	Arc	Tan	Arc	Tan	Arc	Tan	Arc	Tan	Arc	M
0	4011.96	7000.00	4086.90	7100.00	4162.82	7200.00	4239.71	7300.00	4317.58	7400.00	0
1	4013.19	7001.67	4088.16	7101.67	4164.11	7201.67	4241.00	7301.67	4318.90	7401.67	1
2	4014.42	7003.33	4089.42	7103.33	4165.40	7203.33	4242.29	7303.33	4320.21	7403.33	2
3	4015.65	7005.00	4090.68	7105.00	4166.66	7205.00	4243.58	7305.00	4321.53	7405.00	3
4	4016.89	7006.67	4091.94	7106.67	4167.92	7206.67	4244.87	7306.67	4322.85	7406.67	4
5	4018.15	7008.33	4093.20	7108.33	4169.21	7208.33	4246.16	7308.33	4324.14	7408.33	5
6	4019.41	7010.00	4094.47	7110.00	4170.50	7210.00	4247.45	7310.00	4325.43	7410.00	6
7	4020.64	7011.67	4095.73	7111.67	4171.76	7211.67	4248.74	7311.67	4326.75	7411.67	7
8	4021.87	7013.33	4096.99	7113.33	4173.02	7213.33	4250.03	7313.33	4328.06	7413.33	8
9	4023.13	7015.00	4098.25	7115.00	4174.31	7215.00	4251.31	7315.00	4329.38	7415.00	9
10	4024.39	7016.67	4099.51	7116.67	4175.60	7216.67	4252.60	7316.67	4330.70	7416.67	10
11	4025.62	7018.33	4100.77	7118.33	4176.86	7218.33	4253.92	7318.33	4331.99	7418.33	11
12	4026.86	7020.00	4102.03	7120.00	4178.12	7220.00	4255.24	7320.00	4333.28	7420.00	12
13	4028.12	7021.67	4103.29	7121.67	4179.41	7221.67	4256.53	7321.67	4334.59	7421.67	13
14	4029.38	7023.33	4104.55	7123.33	4180.70	7223.33	4257.82	7323.33	4335.91	7423.33	14
15	4030.61	7025.00	4105.81	7125.00	4181.96	7225.00	4259.11	7325.00	4337.23	7425.00	15
16	4031.84	7026.67	4107.07	7126.67	4183.22	7226.67	4260.40	7326.67	4338.55	7426.67	16
17	4033.10	7028.33	4108.33	7128.33	4184.51	7228.33	4261.69	7328.33	4339.87	7428.33	17
18	4034.36	7030.00	4109.59	7130.00	4185.80	7230.00	4262.97	7330.00	4341.18	7430.00	18
19	4035.59	7031.67	4110.85	7131.67	4187.08	7231.67	4264.26	7331.67	4342.47	7431.67	19
20	4036.82	7033.33	4112.11	7133.33	4188.37	7233.33	4265.55	7333.33	4343.76	7433.33	20
21	4038.09	7035.00	4113.37	7135.00	4189.63	7235.00	4266.84	7335.00	4345.08	7435.00	21
22	4039.35	7036.67	4114.63	7136.67	4190.90	7236.67	4268.13	7336.67	4346.40	7436.67	22
23	4040.58	7038.33	4115.89	7138.33	4192.18	7238.33	4269.45	7338.33	4347.72	7438.33	23
24	4041.81	7040.00	4117.15	7140.00	4193.47	7240.00	4270.77	7340.00	4349.03	7440.00	24
25	4043.07	7041.67	4118.42	7141.67	4194.76	7241.67	4272.06	7341.67	4350.35	7441.67	25
26	4044.33	7043.33	4119.68	7143.33	4196.05	7243.33	4273.34	7343.33	4351.67	7443.33	26
27	4045.56	7045.00	4120.96	7145.00	4197.31	7245.00	4274.63	7345.00	4352.99	7445.00	27
28	4046.79	7046.67	4122.25	7146.67	4198.57	7246.67	4275.92	7346.67	4354.30	7446.67	28
29	4048.06	7048.33	4123.51	7148.33	4199.86	7248.33	4277.24	7348.33	4355.62	7448.33	29

TANGENTS AND ARCS OF A ONE-DEGREE CURVE

	Δ										
	70°		71°		72°		73°		74°		
M	Tan	Arc	Tan	Arc	Tan	Arc	Tan	Arc	Tan	Arc	M
30	4049.32	7050.00	4124.78	7150.00	4201.15	7250.00	4278.56	7350.00	4356.94	7450.00	30
31	4050.58	7051.67	4126.04	7151.67	4202.44	7251.67	4279.85	7351.67	4358.26	7451.67	31
32	4051.84	7053.33	4127.30	7153.33	4203.73	7253.33	4281.14	7353.33	4359.58	7453.33	32
33	4053.07	7055.00	4128.56	7155.00	4205.02	7255.00	4282.43	7355.00	4360.89	7455.00	33
34	4054.30	7056.67	4129.82	7156.67	4206.31	7256.67	4283.72	7356.67	4362.21	7456.67	34
35	4055.56	7058.33	4131.08	7158.33	4207.57	7258.33	4285.03	7358.33	4363.53	7458.33	35
36	4056.82	7060.00	4132.34	7160.00	4208.83	7260.00	4286.35	7360.00	4364.85	7460.00	36
37	4058.08	7061.67	4133.63	7161.67	4210.12	7261.67	4287.64	7361.67	4366.17	7461.67	37
38	4059.34	7063.33	4134.92	7163.33	4211.41	7263.33	4288.93	7363.33	4367.48	7463.33	38
39	4060.57	7065.00	4136.18	7165.00	4212.70	7265.00	4290.22	7365.00	4368.80	7465.00	39
40	4061.81	7066.67	4137.44	7166.67	4213.99	7266.67	4291.51	7366.67	4370.12	7466.67	40
41	4063.07	7068.33	4138.70	7168.33	4215.27	7268.33	4292.83	7368.33	4371.44	7468.33	41
42	4064.33	7070.00	4139.96	7170.00	4216.56	7270.00	4294.14	7370.00	4372.75	7470.00	42
43	4065.59	7071.67	4141.22	7171.67	4217.85	7271.67	4295.43	7371.67	4374.07	7471.67	43
44	4066.85	7073.33	4142.48	7173.33	4219.14	7273.33	4296.72	7373.33	4375.39	7473.33	44
45	4068.11	7075.00	4143.77	7175.00	4220.40	7275.00	4298.04	7375.00	4376.71	7475.00	45
46	4069.37	7076.67	4145.06	7176.67	4221.66	7276.67	4299.36	7376.67	4378.03	7476.67	46
47	4070.60	7078.33	4146.32	7178.33	4222.95	7278.33	4300.65	7378.33	4379.34	7478.33	47
48	4071.83	7080.00	4147.58	7180.00	4224.24	7280.00	4301.94	7380.00	4380.66	7480.00	48
49	4073.09	7081.67	4148.84	7181.67	4225.53	7281.67	4303.25	7381.67	4381.98	7481.67	49
50	4074.35	7083.33	4150.10	7183.33	4226.82	7283.33	4304.57	7383.33	4383.30	7483.33	50
51	4075.61	7085.00	4151.39	7185.00	4228.11	7285.00	4305.86	7385.00	4384.61	7485.00	51
52	4076.88	7086.67	4152.68	7186.67	4229.40	7286.67	4307.15	7386.67	4385.93	7486.67	52
53	4078.14	7088.33	4153.94	7188.33	4230.69	7288.33	4308.47	7388.33	4387.25	7488.33	53
54	4079.40	7090.00	4155.20	7190.00	4231.98	7290.00	4309.79	7390.00	4388.57	7490.00	54
55	4080.66	7091.67	4156.46	7191.67	4233.27	7291.67	4311.07	7391.67	4389.89	7491.67	55
56	4081.92	7093.33	4157.72	7193.33	4234.56	7293.33	4312.36	7393.33	4391.20	7493.33	56
57	4083.15	7095.00	4159.01	7195.00	4235.84	7295.00	4313.68	7395.00	4392.52	7495.00	57
58	4084.38	7096.67	4160.30	7196.67	4237.13	7296.67	4315.00	7396.67	4393.84	7496.67	58
59	4085.64	7098.33	4161.56	7198.33	4238.42	7298.33	4316.29	7398.33	4395.19	7498.33	59

TABLE 53. — *Continued*

TANGENTS AND ARCS OF A ONE-DEGREE CURVE

	Δ										
	75°		76°		77°		78°		79°		
M	Tan	Arc	Tan	Arc	Tan	Arc	Tan	Arc	Tan	Arc	M
0	4396.53	7500.00	4476.52	7600.00	4557.59	7700.00	4639.76	7800.00	4723.18	7900.00	0
1	4397.85	7501.67	4477.84	7601.67	4558.94	7701.67	4641.16	7801.67	4724.58	7901.67	1
2	4399.17	7503.33	4479.15	7603.33	4560.29	7703.33	4642.56	7803.33	4725.99	7903.33	2
3	4400.49	7505.00	4480.50	7605.00	4561.66	7705.00	4643.94	7805.00	4727.36	7905.00	3
4	4401.80	7506.67	4481.85	7606.67	4563.04	7706.67	4645.31	7806.67	4728.74	7906.67	4
5	4403.12	7508.33	4483.19	7608.33	4564.38	7708.33	4646.69	7808.33	4730.14	7908.33	5
6	4404.44	7510.00	4484.54	7610.00	4565.73	7710.00	4648.06	7810.00	4731.54	7910.00	6
7	4405.79	7511.67	4485.89	7611.67	4567.10	7711.67	4649.44	7811.67	4732.95	7911.67	7
8	4407.13	7513.33	4487.23	7613.33	4568.48	7713.33	4650.81	7813.33	4734.35	7913.33	8
9	4408.45	7515.00	4488.58	7615.00	4569.83	7715.00	4652.22	7815.00	4735.76	7915.00	9
10	4409.77	7516.67	4489.93	7616.67	4571.17	7716.67	4653.62	7816.67	4737.16	7916.67	10
11	4411.09	7518.33	4491.27	7618.33	4572.55	7718.33	4655.00	7818.33	4738.56	7918.33	11
12	4412.40	7520.00	4492.62	7620.00	4573.92	7720.00	4656.37	7820.00	4739.97	7920.00	12
13	4413.75	7521.67	4493.97	7621.67	4575.30	7721.67	4657.75	7821.67	4741.37	7921.67	13
14	4415.10	7523.33	4495.31	7623.33	4576.67	7723.33	4659.12	7823.33	4742.78	7923.33	14
15	4416.41	7525.00	4496.66	7625.00	4578.02	7725.00	4660.50	7825.00	4744.18	7925.00	15
16	4417.73	7526.67	4498.00	7626.67	4579.37	7726.67	4661.87	7826.67	4745.58	7926.67	16
17	4419.05	7528.33	4499.35	7628.33	4580.74	7728.33	4663.28	7828.33	4746.99	7928.33	17
18	4420.37	7530.00	4500.70	7630.00	4582.12	7730.00	4664.68	7830.00	4748.39	7930.00	18
19	4421.71	7531.67	4502.04	7631.67	4583.49	7731.67	4666.06	7831.67	4749.79	7931.67	19
20	4423.06	7533.33	4503.39	7633.33	4584.87	7733.33	4667.43	7833.33	4751.20	7933.33	20
21	4424.38	7535.00	4504.74	7635.00	4586.21	7735.00	4668.83	7835.00	4752.60	7935.00	21
22	4425.70	7536.67	4506.08	7636.67	4587.56	7736.67	4670.24	7836.67	4754.01	7936.67	22
23	4427.04	7538.33	4507.43	7638.33	4588.93	7738.33	4671.61	7838.33	4755.44	7938.33	23
24	4428.39	7540.00	4508.78	7640.00	4590.31	7740.00	4672.99	7840.00	4756.87	7940.00	24
25	4429.71	7541.67	4510.12	7641.67	4591.68	7741.67	4674.36	7841.67	4758.27	7941.67	25
26	4431.02	7543.33	4511.47	7643.33	4593.06	7743.33	4675.74	7843.33	4759.68	7943.33	26
27	4432.37	7545.00	4512.82	7645.00	4594.43	7745.00	4677.14	7845.00	4761.08	7945.00	27
28	4433.72	7546.67	4514.16	7646.67	4595.81	7746.67	4678.55	7846.67	4762.49	7946.67	28
29	4435.04	7548.33	4515.54	7648.33	4597.16	7748.33	4679.92	7848.33	4763.89	7948.33	29

TANGENTS AND ARCS OF A ONE-DEGREE CURVE

	Δ										
	75°		76°		77°		78°		79°		
M	Tan	Arc	Tan	Arc	Tan	Arc	Tan	Arc	Tan	Arc	M
30	4436.35	7550.00	4516.91	7650.00	4598.50	7750.00	4681.30	7850.00	4765.29	7950.00	30
31	4437.70	7551.67	4518.26	7651.67	4599.88	7751.67	4682.70	7851.67	4766.70	7951.67	31
32	4439.05	7553.33	4519.61	7653.33	4601.25	7753.33	4684.10	7853.33	4768.10	7953.33	32
33	4440.36	7555.00	4520.95	7655.00	4602.63	7755.00	4685.48	7855.00	4769.53	7955.00	33
34	4441.68	7556.67	4522.30	7656.67	4604.00	7756.67	4686.85	7856.67	4770.96	7956.67	34
35	4443.03	7558.33	4523.64	7658.33	4605.38	7758.33	4688.26	7858.33	4772.37	7958.33	35
36	4444.37	7560.00	4524.99	7660.00	4606.75	7760.00	4689.66	7860.00	4773.77	7960.00	36
37	4445.72	7561.67	4526.34	7661.67	4608.13	7761.67	4691.06	7861.67	4775.18	7961.67	37
38	4447.07	7563.33	4527.68	7663.33	4609.50	7763.33	4692.47	7863.33	4776.58	7963.33	38
39	4448.39	7565.00	4529.06	7665.00	4610.88	7765.00	4693.84	7865.00	4777.98	7965.00	39
40	4449.70	7566.67	4530.43	7666.67	4612.25	7766.67	4695.22	7866.67	4779.39	7966.67	40
41	4451.05	7568.33	4531.78	7668.33	4613.63	7768.33	4696.62	7868.33	4780.82	7968.33	41
42	4452.40	7570.00	4533.13	7670.00	4615.00	7770.00	4698.03	7870.00	4782.25	7970.00	42
43	4453.71	7571.67	4534.47	7671.67	4616.38	7771.67	4699.43	7871.67	4783.66	7971.67	43
44	4455.03	7573.33	4535.82	7673.33	4617.75	7773.33	4700.83	7873.33	4785.06	7973.33	44
45	4456.38	7575.00	4537.20	7675.00	4619.13	7775.00	4702.21	7875.00	4786.49	7975.00	45
46	4457.72	7576.67	4538.57	7676.67	4620.50	7776.67	4703.58	7876.67	4787.92	7976.67	46
47	4459.07	7578.33	4539.92	7678.33	4621.88	7778.33	4704.99	7878.33	4789.33	7978.33	47
48	4460.42	7580.00	4541.26	7680.00	4623.25	7780.00	4706.39	7880.00	4790.73	7980.00	48
49	4461.76	7581.67	4542.61	7681.67	4624.63	7781.67	4707.80	7881.67	4792.14	7981.67	49
50	4463.11	7583.33	4543.96	7683.33	4626.00	7783.33	4709.20	7883.33	4793.54	7983.33	50
51	4464.43	7585.00	4545.33	7685.00	4627.38	7785.00	4710.57	7885.00	4794.97	7985.00	51
52	4465.75	7586.67	4546.71	7686.67	4628.76	7786.67	4711.95	7886.67	4796.40	7986.67	52
53	4467.09	7588.33	4548.05	7688.33	4630.13	7788.33	4713.35	7888.33	4797.81	7988.33	53
54	4468.44	7590.00	4549.40	7690.00	4631.51	7790.00	4714.76	7890.00	4799.21	7990.00	54
55	4469.79	7591.67	4550.77	7691.67	4632.88	7791.67	4716.16	7891.67	4800.64	7991.67	55
56	4471.13	7593.33	4552.15	7693.33	4634.26	7793.33	4717.56	7893.33	4802.08	7993.33	56
57	4472.48	7595.00	4553.50	7695.00	4635.63	7795.00	4718.97	7895.00	4803.48	7995.00	57
58	4473.83	7596.67	4554.84	7696.67	4637.01	7796.67	4720.37	7896.67	4804.88	7996.67	58
59	4475.17	7598.33	4556.22	7698.33	4638.38	7798.33	4721.78	7898.33	4806.32	7998.33	59

TABLE 53.—*Continued*

TANGENTS AND ARCS OF A ONE-DEGREE CURVE

	Δ										
	80°		81°		82°		83°		84°		
M	Tan	Arc	Tan	Arc	Tan	Arc	Tan	Arc	Tan	Arc	M
0	4807.75	8000.00	4893.58	8100.00	4980.73	8200.00	5069.14	8300.00	5158.98	8400.00	0
1	4809.18	8001.67	4895.01	8101.67	4982.19	8201.67	5070.63	8301.67	5160.50	8401.67	1
2	4810.61	8003.33	4896.44	8103.33	4983.65	8203.33	5072.12	8303.33	5162.01	8403.33	2
3	4812.02	8005.00	4897.91	8105.00	4985.11	8205.00	5073.61	8305.00	5163.53	8405.00	3
4	4813.42	8006.67	4899.37	8106.67	4986.57	8206.67	5075.09	8306.67	5165.05	8406.67	4
5	4814.85	8008.33	4900.80	8108.33	4988.03	8208.33	5076.58	8308.33	5166.57	8408.33	5
6	4816.29	8010.00	4902.23	8110.00	4989.49	8210.00	5078.07	8310.00	5168.09	8410.00	6
7	4817.69	8011.67	4903.66	8111.67	4990.95	8211.67	5079.56	8311.67	5169.58	8411.67	7
8	4819.09	8013.33	4905.10	8113.33	4992.42	8213.33	5081.05	8313.33	5171.07	8413.33	8
9	4820.53	8015.00	4906.56	8115.00	4993.88	8215.00	5082.54	8315.00	5172.58	8415.00	9
10	4821.96	8016.67	4908.02	8116.67	4995.34	8216.67	5084.03	8316.67	5174.10	8416.67	10
11	4823.39	8018.33	4909.45	8118.33	4996.83	8218.33	5085.52	8318.33	5175.62	8418.33	11
12	4824.82	8020.00	4910.88	8120.00	4998.32	8220.00	5087.01	8320.00	5177.14	8420.00	12
13	4826.26	8021.67	4912.34	8121.67	4999.78	8221.67	5088.50	8321.67	5178.66	8421.67	13
14	4827.69	8023.33	4913.81	8123.33	5001.24	8223.33	5089.99	8323.33	5180.18	8423.33	14
15	4829.09	8025.00	4915.24	8125.00	5002.70	8225.00	5091.48	8325.00	5181.69	8425.00	15
16	4830.50	8026.67	4916.67	8126.67	5004.16	8226.67	5092.97	8326.67	5183.21	8426.67	16
17	4831.93	8028.33	4918.13	8128.33	5005.62	8228.33	5094.46	8328.33	5184.73	8428.33	17
18	4833.36	8030.00	4919.59	8130.00	5007.08	8230.00	5095.95	8330.00	5186.25	8430.00	18
19	4834.79	8031.67	4921.02	8131.67	5008.57	8231.67	5097.44	8331.67	5187.77	8431.67	19
20	4836.23	8033.33	4922.46	8133.33	5010.06	8233.33	5098.93	8333.33	5189.29	8433.33	20
21	4837.66	8035.00	4923.92	8135.00	5011.52	8235.00	5100.45	8335.00	5190.78	8435.00	21
22	4839.09	8036.67	4925.38	8136.67	5012.99	8236.67	5101.97	8336.67	5192.27	8436.67	22
23	4840.52	8038.33	4926.84	8138.33	5014.45	8238.33	5103.46	8338.33	5193.78	8438.33	23
24	4841.96	8040.00	4928.30	8140.00	5015.91	8240.00	5104.95	8340.00	5195.30	8440.00	24
25	4843.36	8041.67	4929.73	8141.67	5017.40	8241.67	5106.44	8341.67	5196.82	8441.67	25
26	4844.76	8043.33	4931.17	8143.33	5018.89	8243.33	5107.93	8343.33	5198.34	8443.33	26
27	4846.20	8045.00	4932.63	8145.00	5020.35	8245.00	5109.42	8345.00	5199.89	8445.00	27
28	4847.63	8046.67	4934.09	8146.67	5021.81	8246.67	5110.91	8346.67	5201.43	8446.67	28
29	4849.06	8048.33	4935.55	8148.33	5023.30	8248.33	5112.39	8348.33	5202.95	8448.33	29

TANGENTS AND ARCS OF A ONE-DEGREE CURVE

	Δ										
	80°		81°		82°		83°		84°		
M	Tan	Arc	Tan	Arc	Tan	Arc	Tan	Arc	Tan	Arc	M
30	4850.49	8050.00	4937.01	8150.00	5024.79	8250.00	5113.88	8350.00	5204.47	8450.00	30
31	4851.92	8051.67	4938.44	8151.67	5026.25	8251.67	5115.40	8351.67	5205.99	8451.67	31
32	4853.36	8053.33	4939.88	8153.33	5027.71	8253.33	5116.92	8353.33	5207.51	8453.33	32
33	4854.79	8055.00	4941.34	8155.00	5029.20	8255.00	5118.41	8355.00	5209.03	8455.00	33
34	4856.22	8056.67	4942.80	8156.67	5030.69	8256.67	5119.90	8356.67	5210.54	8456.67	34
35	4857.65	8058.33	4944.26	8158.33	5032.18	8258.33	5121.39	8358.33	5212.06	8458.33	35
36	4859.09	8060.00	4945.72	8160.00	5033.67	8260.00	5122.88	8360.00	5213.58	8460.00	36
37	4860.52	8061.67	4947.15	8161.67	5035.13	8261.67	5124.40	8361.67	5215.10	8461.67	37
38	4861.95	8063.33	4948.58	8163.33	5036.59	8263.33	5125.92	8363.33	5216.62	8463.33	38
39	4863.38	8065.00	4950.05	8165.00	5038.05	8265.00	5127.41	8365.00	5218.14	8465.00	39
40	4864.82	8066.67	4951.51	8166.67	5039.51	8266.67	5128.90	8366.67	5219.65	8466.67	40
41	4866.25	8068.33	4952.97	8168.33	5041.00	8268.33	5130.39	8368.33	5221.20	8468.33	41
42	4867.68	8070.00	4954.43	8170.00	5042.49	8270.00	5131.88	8370.00	5222.75	8470.00	42
43	4869.11	8071.67	4955.89	8171.67	5043.98	8271.67	5133.39	8371.67	5224.27	8471.67	43
44	4870.55	8073.33	4957.35	8173.33	5045.47	8273.33	5134.91	8373.33	5225.78	8473.33	44
45	4872.01	8075.00	4958.81	8175.00	5046.93	8275.00	5136.40	8375.00	5227.30	8475.00	45
46	4873.47	8076.67	4960.27	8176.67	5048.39	8276.67	5137.89	8376.67	5228.82	8476.67	46
47	4874.90	8078.33	4961.73	8178.33	5049.88	8278.33	5139.41	8378.33	5230.37	8478.33	47
48	4876.33	8080.00	4963.19	8180.00	5051.37	8280.00	5140.93	8380.00	5231.92	8480.00	48
49	4877.77	8081.67	4964.66	8181.67	5052.86	8281.67	5142.42	8381.67	5233.43	8481.67	49
50	4879.20	8083.33	4966.12	8183.33	5054.35	8283.33	5143.91	8383.33	5234.95	8483.33	50
51	4880.63	8085.00	4967.58	8185.00	5055.81	8285.00	5145.43	8385.00	5236.47	8485.00	51
52	4882.06	8086.67	4969.04	8186.67	5057.28	8286.67	5146.94	8386.67	5237.99	8486.67	52
53	4883.50	8088.33	4970.50	8188.33	5058.77	8288.33	5148.46	8388.33	5239.54	8488.33	53
54	4884.93	8090.00	4971.96	8190.00	5060.25	8290.00	5149.98	8390.00	5241.08	8490.00	54
55	4886.39	8091.67	4973.42	8191.67	5061.74	8291.67	5151.47	8391.67	5242.60	8491.67	55
56	4887.85	8093.33	4974.88	8193.33	5063.23	8293.33	5152.96	8393.33	5244.12	8493.33	56
57	4889.28	8095.00	4976.34	8195.00	5064.72	8295.00	5154.48	8395.00	5245.67	8495.00	57
58	4890.71	8096.67	4977.81	8196.67	5066.21	8296.67	5156.00	8396.67	5247.21	8496.67	58
59	4892.15	8098.33	4979.27	8198.33	5067.67	8298.33	5157.49	8398.33	5248.73	8498.33	59

TABLE 53. — *Continued*

TANGENTS AND ARCS OF A ONE-DEGREE CURVE

	Δ										
	85°		86°		87°		88°		89°		
M	Tan	Arc	Tan	Arc	Tan	Arc	Tan	Arc	Tan	Arc	M
0	5250.25	8500.00	5343.01	8600.00	5437.21	8700.00	5533.07	8800.00	5630.53	8900.89	0
1	5251.80	8501.67	5344.56	8601.67	5438.81	8701.67	5534.67	8801.67	5632.16	8901.67	1
2	5253.34	8503.33	5346.11	8603.33	5440.42	8703.33	5536.27	8803.33	5633.79	8903.33	2
3	5254.86	8505.00	5347.65	8605.00	5441.99	8705.00	5537.88	8805.00	5635.43	8905.00	3
4	5256.38	8506.67	5349.20	8606.67	5443.57	8706.67	5539.48	8806.67	5637.06	8906.67	4
5	5257.93	8508.33	5350.78	8608.33	5445.14	8708.33	5541.12	8808.33	5638.69	8908.33	5
6	5259.47	8510.00	5352.35	8610.00	5446.72	8710.00	5542.75	8810.00	5640.32	8910.00	6
7	5260.99	8511.67	5353.90	8611.67	5448.32	8711.67	5544.35	8811.67	5641.99	8911.67	7
8	5262.51	8513.33	5355.45	8613.33	5449.93	8713.33	5545.96	8813.33	5643.65	8913.33	8
9	5264.06	8515.00	5357.02	8615.00	5451.50	8715.00	5547.56	8815.00	5645.28	8915.00	9
10	5265.61	8516.67	5358.60	8616.67	5453.08	8716.67	5549.17	8816.67	5646.91	8916.67	10
11	5267.15	8518.33	5360.14	8618.33	5454.68	8718.33	5550.80	8818.33	5648.55	8918.33	11
12	5268.70	8520.00	5361.69	8620.00	5456.29	8720.00	5552.43	8820.00	5650.18	8920.00	12
13	5270.22	8521.67	5363.27	8621.67	5457.86	8721.67	5554.04	8821.67	5651.84	8921.67	13
14	5271.74	8523.33	5364.84	8623.33	5459.44	8723.33	5555.64	8823.33	5653.50	8923.33	14
15	5273.28	8525.00	5366.42	8625.00	5461.04	8725.00	5557.27	8825.00	5655.14	8925.00	15
16	5274.83	8526.67	5367.99	8626.67	5462.65	8726.67	5558.91	8826.67	5656.77	8926.67	16
17	5276.38	8528.33	5369.54	8628.33	5464.22	8728.33	5560.51	8828.33	5658.43	8928.33	17
18	5277.92	8530.00	5371.09	8630.00	5465.80	8730.00	5562.12	8830.00	5660.09	8930.00	18
19	5279.47	8531.67	5372.66	8631.67	5467.40	8731.67	5563.75	8831.67	5661.72	8931.67	19
20	5281.02	8533.33	5374.24	8633.33	5469.01	8733.33	5565.38	8833.33	5663.36	8933.33	20
21	5282.57	8535.00	5375.82	8635.00	5470.58	8735.00	5566.99	8835.00	5665.02	8935.00	21
22	5284.11	8536.67	5377.39	8636.67	5472.16	8736.67	5568.59	8836.67	5666.68	8936.67	22
23	5285.63	8538.33	5378.94	8638.33	5473.76	8738.33	5570.22	8838.33	5668.31	8938.33	23
24	5287.15	8540.00	5380.49	8640.00	5475.37	8740.00	5571.86	8840.00	5669.95	8940.00	24
25	5288.70	8541.67	5382.06	8641.67	5476.97	8741.67	5573.46	8841.67	5671.61	8941.67	25
26	5290.24	8543.33	5383.64	8643.33	5478.58	8743.33	5575.06	8843.33	5673.27	8943.33	26
27	5291.79	8545.00	5385.21	8645.00	5480.15	8745.00	5576.70	8845.00	5674.90	8945.00	27
28	5293.34	8546.67	5386.79	8646.67	5481.73	8746.67	5578.33	8846.67	5676.54	8946.67	28
29	5294.88	8548.33	5388.36	8648.33	5483.33	8748.33	5579.96	8848.33	5678.20	8948.33	29

TANGENTS AND ARCS OF A ONE-DEGREE CURVE

	Δ										
	85°		86°		87°		88°		89°		
M	Tan	Arc	Tan	Arc	Tan	Arc	Tan	Arc	Tan	Arc	M
30	5296.43	8550.00	5389.94	8650.00	5484.94	8750.00	5581.60	8850.00	5679.86	8950.00	30
31	5297.98	8551.67	5391.49	8651.67	5486.54	8751.67	5583.20	8851.67	5681.52	8951.67	31
32	5299.53	8553.33	5393.03	8653.33	5488.15	8753.33	5584.80	8853.33	5683.18	8953.33	32
33	5301.07	8555.00	5394.61	8655.00	5489.75	8755.00	5586.44	8855.00	5684.84	8955.00	33
34	5302.62	8556.67	5396.18	8656.67	5491.35	8756.67	5588.07	8856.67	5686.51	8956.67	34
35	5304.17	8558.33	5397.76	8658.33	5492.96	8758.33	5589.70	8858.33	5688.14	8958.33	35
36	5305.71	8560.00	5399.34	8660.00	5494.56	8760.00	5591.34	8860.00	5689.77	8960.00	36
37	5307.26	8561.67	5400.91	8661.67	5496.14	8761.67	5592.97	8861.67	5691.43	8961.67	37
38	5308.81	8563.33	5402.49	8663.33	5497.71	8763.33	5594.60	8863.33	5693.09	8963.33	38
39	5310.35	8565.00	5404.06	8665.00	5499.32	8765.00	5596.24	8865.00	5694.76	8965.00	39
40	5311.90	8566.67	5405.64	8666.67	5500.92	8766.67	5597.87	8866.67	5696.42	8966.67	40
41	5313.45	8568.33	5407.21	8668.33	5502.53	8768.33	5599.47	8868.33	5698.08	8968.33	41
42	5315.00	8570.00	5408.79	8670.00	5504.13	8770.00	5601.08	8870.00	5699.74	8970.00	42
43	5316.54	8571.67	5410.37	8671.67	5505.74	8771.67	5602.71	8871.67	5701.40	8971.67	43
44	5318.09	8573.33	5411.94	8673.33	5507.34	8773.33	5604.34	8873.33	5703.06	8973.33	44
45	5319.66	8575.00	5413.52	8675.00	5508.94	8775.00	5605.98	8875.00	5704.73	8975.00	45
46	5321.24	8576.67	5415.09	8676.67	5510.55	8776.67	5607.61	8876.67	5706.39	8976.67	46
47	5322.79	8578.33	5416.67	8678.33	5512.15	8778.33	5609.24	8878.33	5708.05	8978.33	47
48	5324.33	8580.00	5418.24	8680.00	5513.76	8780.00	5610.87	8880.00	5709.71	8980.00	48
49	5325.88	8581.67	5419.82	8681.67	5515.36	8781.67	5612.51	8881.67	5711.37	8981.67	49
50	5327.43	8583.33	5421.39	8683.33	5516.97	8783.33	5614.14	8883.33	5713.03	8983.33	50
51	5328.98	8585.00	5423.00	8685.00	5518.57	8785.00	5615.77	8885.00	5714.70	8985.00	51
52	5330.52	8586.67	5424.60	8686.67	5520.17	8786.67	5617.41	8886.67	5716.36	8986.67	52
53	5332.07	8588.33	5426.18	8688.33	5521.78	8788.33	5619.04	8888.33	5718.02	8988.33	53
54	5333.62	8590.00	5427.75	8690.00	5523.83	8790.00	5620.67	8890.00	5719.68	8990.00	54
55	5335.19	8591.67	5429.33	8691.67	5525.02	8791.67	5622.31	8891.67	5721.34	8991.67	55
56	5336.77	8593.33	5430.91	8693.33	5526.65	8793.33	5623.94	8893.33	5723.00	8993.33	56
57	5338.31	8595.00	5432.48	8695.00	5528.25	8795.00	5625.60	8895.00	5724.67	8995.00	57
58	5339.86	8596.67	5434.06	8696.67	5529.86	8796.67	5627.26	8896.67	5726.33	8996.67	58
59	5341.44	8598.33	5435.63	8698.33	5531.46	8798.33	5628.89	8898.33	5727.99	8998.33	59

TABLE 53A

CORRECTIONS TO BE ADDED TO THE TANGENT

Δ	Degree of Curve												Δ
	2°	4°	6°	8°	10°	12°	14°	16°	18°	20°	25°	30°	
5°	0.00	0.01	0.02	0.03	0.03	0.04	0.04	0.05	0.06	0.06	0.08	0.10	5°
10°	0.01	0.02	0.04	0.05	0.06	0.08	0.09	0.10	0.11	0.12	0.15	0.19	10°
15°	0.01	0.04	0.06	0.08	0.09	0.11	0.14	0.15	0.17	0.19	0.24	0.29	15°
20°	0.02	0.05	0.07	0.10	0.13	0.15	0.18	0.20	0.23	0.26	0.32	0.39	20°
25°	0.02	0.06	0.09	0.13	0.16	0.19	0.22	0.25	0.29	0.33	0.41	0.49	25°
30°	0.03	0.07	0.11	0.15	0.19	0.23	0.27	0.31	0.35	0.39	0.49	0.59	30°
35°	0.03	0.09	0.13	0.18	0.23	0.27	0.32	0.36	0.41	0.46	0.56	0.69	35°
40°	0.04	0.10	0.15	0.21	0.26	0.32	0.37	0.42	0.47	0.52	0.66	0.80	40°
45°	0.05	0.11	0.18	0.24	0.30	0.36	0.42	0.48	0.54	0.60	0.75	0.91	45°
50°	0.05	0.13	0.20	0.27	0.34	0.40	0.47	0.54	0.61	0.68	0.85	1.03	50°
55°	0.06	0.14	0.22	0.30	0.38	0.45	0.53	0.60	0.68	0.76	0.95	1.15	55°
60°	0.06	0.16	0.24	0.33	0.42	0.50	0.59	0.67	0.75	0.83	1.05	1.27	60°
65°	0.07	0.17	0.27	0.37	0.46	0.55	0.65	0.74	0.83	0.92	1.16	1.40	65°
70°	0.08	0.19	0.30	0.40	0.50	0.61	0.71	0.81	0.91	1.01	1.27	1.54	70°
75°	0.08	0.21	0.33	0.44	0.55	0.67	0.78	0.89	1.00	1.11	1.40	1.69	75°
80°	0.09	0.23	0.36	0.48	0.60	0.73	0.86	0.97	1.09	1.21	1.52	1.84	80°
85°	0.10	0.25	0.39	0.53	0.66	0.80	0.93	1.06	1.20	1.34	1.68	2.02	85°
90°	0.11	0.27	0.42	0.57	0.72	0.87	1.02	1.16	1.30	1.44	1.82	2.20	90°

TABLE 54

LOGARITHMS OF NUMBERS

N.	0	1	2	3	4	5	6	7	8	9	Diff.
100	000000	0434	0868	1301	1734	2166	2598	3029	3461	3891	432
101	4321	4751	5181	5609	6038	6466	6894	7321	7748	8174	428
102	8600	9026	9451	9876	*0300	*0724	*1147	*1570	*1993	*2415	424
103	012837	3259	3680	4100	4521	4940	5360	5779	6197	6616	420
104	7033	7451	7868	8284	8700	9116	9532	9947	*0361	*0775	416
105	021189	1603	2016	2428	2841	3252	3664	4075	4486	4896	412
106	5306	5715	6125	6533	6942	7350	7757	8164	8571	8978	408
107	9384	9789	*0195	*0600	*1004	*1408	*1812	*2216	*2619	*3021	404
108	033424	3826	4227	4628	5029	5430	5830	6230	6629	7028	400
109	7426	7825	8223	8620	9017	9414	9811	*0207	*0602	*0998	397

PROPORTIONAL PARTS

N.	Diff.	1	2	3	4	5	6	7	8	9	Diff.
	434	43	87	130	174	217	260	304	347	391	434
	433	43	87	130	173	217	260	303	346	390	433
	432	43	86	130	173	216	259	302	346	389	432
	431	43	86	129	172	216	259	302	345	388	431
	430	43	86	129	172	215	258	301	344	387	430
	429	43	86	129	172	215	257	300	343	386	429
	428	43	86	128	171	214	257	300	342	385	428
	427	43	85	128	171	214	256	299	342	384	427
	426	43	85	128	170	213	256	298	341	383	426
	425	43	85	128	170	213	255	298	340	383	425
	424	42	85	127	170	212	254	297	339	382	424
	423	42	85	127	169	212	254	296	338	381	423
	422	42	84	127	169	211	253	295	338	380	422
	421	42	84	126	168	211	253	295	337	379	421
	420	42	84	126	168	210	252	294	336	378	420
	419	42	84	126	168	210	251	293	335	377	419
	418	42	84	125	167	209	251	293	334	376	418
	417	42	83	125	167	209	250	292	334	375	417
	416	42	83	125	166	208	250	291	333	374	416
	415	42	83	125	166	208	249	291	332	374	415
	414	41	83	124	166	207	248	290	331	373	414
	413	41	83	124	165	207	248	289	330	372	413
	412	41	82	124	165	206	247	288	330	371	412
	411	41	82	123	164	206	247	288	329	370	411
	410	41	82	123	164	205	246	287	328	369	410
	409	41	82	123	164	205	245	286	327	368	409
	408	41	82	122	163	204	245	286	326	367	408
	407	41	81	122	163	204	244	285	326	366	407
	406	41	81	122	162	203	244	284	325	365	406
	405	41	81	122	162	203	243	284	324	365	405
	404	40	81	121	162	202	242	283	323	364	404
	403	40	81	121	161	202	242	282	322	363	403
	402	40	80	121	161	201	241	281	322	362	402
	401	40	80	120	160	201	241	281	321	361	401
	400	40	80	120	160	200	240	280	320	360	400
	399	40	80	120	160	200	239	279	319	359	399
	398	40	80	119	159	199	239	279	318	358	398
	397	40	79	119	159	199	238	278	318	357	397
	396	40	79	119	158	198	238	277	317	356	396
	395	40	79	119	158	198	237	277	316	356	395
	394	39	79	118	158	197	236	276	315	355	394
	393	39	79	118	157	197	236	275	314	354	393
	392	39	78	118	157	196	235	274	314	353	392
	391	39	78	117	156	196	235	274	313	352	391
	390	39	78	117	156	195	234	273	312	351	390
	389	39	78	117	156	195	233	272	311	350	389
	388	39	78	116	155	194	233	272	310	349	388
	Diff.	1	2	3	4	5	6	7	8	9	Diff.

TABLE 54. — *Continued*

LOGARITHMS OF NUMBERS

N.	0	1	2	3	4	5	6	7	8	9	Diff.
110	041393	1787	2182	2576	2969	3362	3755	4148	4540	4932	393
111	5323	5714	6105	6495	6885	7275	7664	8053	8442	8830	390
112	9218	9606	9993	*0380	*0766	*1153	*1538	*1924	*2309	*2694	386
113	053078	3463	3846	4230	4613	4996	5378	5760	6142	6524	383
114	6905	7286	7666	8046	8426	8805	9185	9563	9942	*0320	379
115	060698	1075	1452	1829	2206	2582	2958	3333	3709	4083	376
116	4458	4832	5206	5580	5953	6326	6699	7071	7443	7815	373
117	8186	8557	8928	9298	9668	*0038	*0407	*0776	*1145	*1514	370
118	071882	2250	2617	2985	3352	3718	4085	4451	4816	5182	366
119	5547	5912	6276	6640	7004	7368	7731	8094	8457	8819	363
120	079181	9543	9904	*0266	*0626	*0987	*1347	*1707	*2067	*2426	360
121	082785	3144	3503	3861	4219	4576	4934	5291	5647	6004	357
122	6360	6716	7071	7426	7781	8136	8490	8845	9198	9552	355
123	9905	*0258	*0611	*0963	*1315	*1667	*2018	*2370	*2721	*3071	352
124	093422	3772	4122	4471	4820	5169	5518	5866	6215	6562	349

PROPORTIONAL PARTS

N.	Diff.	1	2	3	4	5	6	7	8	9	Diff.
	387	39	77	116	155	194	232	271	310	348	387
	386	39	77	116	154	193	232	270	309	347	386
	385	39	77	116	154	193	231	270	308	347	385
	384	38	77	115	154	192	230	269	307	346	384
	383	38	77	115	153	192	230	268	306	345	383
	382	38	76	115	153	191	229	267	306	344	382
	381	38	76	114	152	191	229	267	305	343	381
	380	38	76	114	152	190	228	266	304	342	380
	379	38	76	114	152	190	227	265	303	341	379
	378	38	76	113	151	189	227	265	302	340	378
	377	38	75	113	151	189	226	264	302	339	377
	376	38	75	113	150	188	226	263	301	338	376
	375	38	75	113	150	188	225	263	300	338	375
	374	37	75	112	150	187	224	262	299	337	374
	373	37	75	112	149	187	224	261	298	336	373
	372	37	74	112	149	186	223	260	298	335	372
	371	37	74	111	148	186	223	260	297	334	371
	370	37	74	111	148	185	222	259	296	333	370
	369	37	74	111	148	185	221	258	295	332	369
	368	37	74	110	147	184	221	258	294	331	368
	367	37	73	110	147	184	220	257	294	330	367
	366	37	73	110	146	183	220	256	293	329	366
	365	37	73	110	146	183	219	256	292	329	365
	364	36	73	109	146	182	218	255	291	328	364
	363	36	73	109	145	182	218	254	290	327	363
	362	36	72	109	145	181	217	253	290	326	362
	361	36	72	108	144	181	217	253	289	325	361
	360	36	72	108	144	180	216	252	288	324	360
	359	36	72	108	144	180	215	251	287	323	359
	358	36	72	107	143	179	215	251	286	322	358
	357	36	71	107	143	179	214	250	286	321	357
	356	36	71	107	142	178	214	249	285	320	356
	355	36	71	107	142	178	213	249	284	320	355
	354	35	71	106	142	177	212	248	283	319	354
	353	35	71	106	141	177	212	247	282	318	353
	352	35	70	106	141	176	211	246	282	317	352
	351	35	70	105	140	176	211	246	281	316	351
	350	35	70	105	140	175	210	245	280	315	350
	349	35	70	105	140	175	209	244	279	314	349
	348	35	70	104	139	174	209	244	278	313	348
	347	35	69	104	139	174	208	243	278	312	347
	Diff.	1	2	3	4	5	6	7	8	9	Diff.

TABLE 54.—*Continued*

LOGARITHMS OF NUMBERS

N.	0	1	2	3	4	5	6	7	8	9	Diff.
125	096910	7257	7604	7951	8298	8644	8990	9335	9681	*0026	346
126	100371	0715	1059	1403	1747	2091	2434	2777	3119	3462	343
127	3804	4146	4487	4828	5169	5510	5851	6191	6531	6871	341
128	7210	7549	7888	8227	8565	8903	9241	9579	9916	*0253	338
129	110590	0926	1263	1599	1934	2270	2605	2940	3275	3609	335
130	113943	4277	4611	4944	5278	5611	5943	6276	6608	6940	333
131	7271	7603	7934	8265	8595	8926	9256	9586	9915	*0245	330
132	120574	0903	1231	1560	1888	2216	2544	2871	3198	3525	328
133	3852	4178	4504	4830	5156	5481	5806	6131	6456	6781	325
134	7105	7429	7753	8076	8399	8722	9045	9368	9690	*0012	323
135	130334	0655	0977	1298	1619	1939	2260	2580	2900	3219	321
136	3539	3858	4177	4496	4814	5133	5451	5769	6086	6403	318
137	6721	7037	7354	7671	7987	8303	8618	8934	9249	9564	316
138	9879	*0194	*0508	*0822	*1136	*1450	*1763	*2076	*2389	*2702	314
139	143015	3327	3639	3951	4263	4574	4885	5196	5507	5818	311

PROPORTIONAL PARTS

N.	Diff.	1	2	3	4	5	6	7	8	9	Diff.
	347	35	69	104	139	174	208	243	278	312	347
	346	35	69	104	138	173	208	242	277	311	346
	345	35	69	104	138	173	207	242	276	311	345
	344	34	69	103	138	172	206	241	275	310	344
	343	34	69	103	137	172	206	240	274	309	343
	342	34	68	103	137	171	205	239	274	308	342
	341	34	68	102	136	171	205	239	273	307	341
	340	34	68	102	136	170	204	238	272	306	340
	339	34	68	102	136	170	203	237	271	305	339
	338	34	68	101	135	169	203	237	270	304	338
	337	34	67	101	135	169	202	236	270	303	337
	336	34	67	101	134	168	202	235	269	302	336
	335	34	67	101	134	168	201	235	268	302	335
	334	33	67	100	134	167	200	234	267	301	334
	333	33	67	100	133	167	200	233	266	300	333
	332	33	66	100	133	166	199	232	266	299	332
	331	33	66	99	132	166	199	232	265	298	331
	330	33	66	99	132	165	198	231	264	297	330
	329	33	66	99	132	165	197	230	263	296	329
	328	33	66	98	131	164	197	230	262	295	328
	327	33	65	98	131	164	196	229	262	294	327
	326	33	65	98	130	163	196	228	261	293	326
	325	33	65	98	130	163	195	228	260	293	325
	324	32	65	97	130	162	194	227	259	292	324
	323	32	65	97	129	162	194	226	258	291	323
	322	32	64	97	129	161	193	225	258	290	322
	321	32	64	96	128	161	193	225	257	289	321
	320	32	64	96	128	160	192	224	256	288	320
	319	32	64	96	128	160	191	223	255	287	319
	318	32	64	95	127	159	191	223	254	286	318
	317	32	63	95	127	159	190	222	254	285	317
	316	32	63	95	126	158	190	221	253	284	316
	315	32	63	95	126	158	189	221	252	284	315
	314	31	63	94	126	157	188	220	251	283	314
	313	31	63	94	125	157	188	219	250	282	313
	312	31	62	94	125	156	187	218	250	281	312
	311	31	62	93	124	156	187	218	249	280	311
	310	31	62	93	124	155	186	217	248	279	310
	309	31	62	93	124	155	185	216	247	278	309
	308	31	62	92	123	154	185	216	246	277	308
	307	31	61	92	123	154	184	215	246	276	307
	Diff.	1	2	3	4	5	6	7	8	9	Diff.

TABLE 54. — *Continued*

LOGARITHMS OF NUMBERS

N.	0	1	2	3	4	5	6	7	8	9
140	146128	6438	6748	7058	7367	7676	7985	8294	8603	8911
141	9219	9527	9835	*0142	*0449	*0756	*1063	*1370	*1676	*1982
142	152288	2594	2900	3205	3510	3815	4120	4424	4728	5032
143	5336	5640	5943	6246	6549	6852	7154	7457	7759	8061
144	8362	8664	8965	9266	9567	9868	*0168	*0469	*0769	*1068
145	161368	1667	1967	2266	2564	2863	3161	3460	3758	4055
146	4353	4650	4947	5244	5541	5838	6134	6430	6726	7022
147	7317	7613	7908	8203	8497	8792	9086	9380	9674	9968
148	170262	0555	0848	1141	1434	1726	2019	2311	2603	2895
149	3186	3478	3769	4060	4351	4641	4932	5222	5512	5802
150	176091	6381	6670	6959	7248	7536	7825	8113	8401	8689
151	8977	9264	9552	9839	*0126	*0413	*0699	*0986	*1272	*1558
152	181844	2129	2415	2700	2985	3270	3555	3839	4123	4407
153	4691	4975	5259	5542	5825	6108	6391	6674	6956	7239
154	7521	7803	8084	8366	8647	8928	9209	9490	9771	*0051
155	190332	0612	0892	1171	1451	1730	2010	2289	2567	2846
156	3125	3403	3681	3959	4237	4514	4792	5069	5346	5623
157	5900	6176	6453	6729	7005	7281	7556	7832	8107	8382
158	8657	8932	9206	9481	9755	*0029	*0303	*0577	*0850	*1124
159	201397	1670	1943	2216	2488	2761	3033	3305	3577	3848

PROPORTIONAL PARTS

N.	Diff.	1	2	3	4	5	6	7	8	9
	306	31	61	92	122	153	184	214	245	275
	305	31	61	92	122	153	183	214	244	275
	304	30	61	91	122	152	182	213	243	274
	303	30	61	91	121	152	182	212	242	273
	302	30	60	91	121	151	181	211	242	272
	301	30	60	90	120	151	181	211	241	271
	300	30	60	90	120	150	180	210	240	270
	299	30	60	90	120	150	179	209	239	269
	298	30	60	89	119	149	179	209	238	268
	297	30	59	89	119	149	178	208	238	267
	296	30	59	89	118	148	178	207	237	266
	295	30	59	89	118	148	177	207	236	266
	294	29	59	88	118	147	176	206	235	265
	293	29	59	88	117	147	176	205	234	264
	292	29	58	88	117	146	175	204	234	263
	291	29	58	87	116	146	175	204	233	262
	290	29	58	87	116	145	174	203	232	261
	289	29	58	87	116	145	173	202	231	260
	288	29	58	86	115	144	173	202	230	259
	287	29	57	86	115	144	172	201	230	258
	286	29	57	86	114	143	172	200	229	257
	285	29	57	86	114	143	171	200	228	257
	284	28	57	85	114	142	170	199	227	256
	283	28	57	85	113	142	170	198	226	255
	282	28	56	85	113	141	169	197	226	254
	281	28	56	84	112	141	169	197	225	253
	280	28	56	84	112	140	168	196	224	252
	279	28	56	84	112	140	167	195	223	251
	278	28	56	83	111	139	167	195	222	250
	277	28	55	83	111	139	166	194	222	249
	276	28	55	83	110	138	166	193	221	248
	275	28	55	83	110	138	165	193	220	248
	274	27	55	82	110	137	164	192	219	247
	273	27	55	82	109	137	164	191	218	246
	272	27	54	82	109	136	163	190	218	245
	271	27	54	81	108	136	163	190	217	244
	Diff.	1	2	3	4	5	6	7	8	9

TABLE 54. — *Continued*

LOGARITHMS OF NUMBERS

N.	0	1	2	3	4	5	6	7	8	9	Diff.
160	204120	4391	4663	4934	5204	5475	5746	6016	6286	6556	271
161	6826	7096	7365	7634	7904	8173	8441	8710	8979	9247	269
162	9515	9783	*0051	*0319	*0586	*0853	*1121	*1388	*1654	*1921	267
163	212188	2454	2720	2986	3252	3518	3783	4049	4314	4579	266
164	4844	5109	5373	5638	5902	6166	6430	6694	6957	7221	264
165	217484	7747	8010	8273	8536	8798	9060	9323	9585	9846	262
166	220108	0370	0631	0892	1153	1414	1675	1936	2196	2456	261
167	2716	2976	3236	3496	3755	4015	4274	4533	4792	5051	259
168	5309	5568	5826	6084	6342	6600	6858	7115	7372	7630	258
169	7887	8144	8400	8657	8913	9170	9426	9682	9938	*0193	256
170	230449	0704	0960	1215	1470	1724	1979	2234	2488	2742	255
171	2996	3250	3504	3757	4011	4264	4517	4770	5023	5276	253
172	5528	5781	6033	6285	6537	6789	7041	7292	7544	7795	252
173	8046	8297	8548	8799	9049	9299	9550	9800	*0050	*0300	250
174	240549	0799	1048	1297	1546	1795	2044	2293	2541	2790	249
175	243038	3286	3534	3782	4030	4277	4525	4772	5019	5266	248
176	5513	5759	6006	6252	6499	6745	6991	7237	7482	7728	246
177	7973	8219	8464	8709	8954	9198	9443	9687	9932	*0176	245
178	250420	0664	0908	1151	1395	1638	1881	2125	2368	2610	243
179	2853	3096	3338	3580	3822	4064	4306	4548	4790	5031	242

PROPORTIONAL PARTS

N.	Diff.	1	2	3	4	5	6	7	8	9	Diff.
	272	27	54	82	109	136	163	190	218	245	272
	271	27	54	81	108	136	163	190	217	244	271
	270	27	54	81	108	135	162	189	216	243	270
	269	27	54	81	108	135	161	188	215	242	269
	268	27	54	80	107	134	161	188	214	241	268
	267	27	53	80	107	134	160	187	214	240	267
	266	27	53	80	106	133	160	186	213	239	266
	265	27	53	80	106	133	159	186	212	239	265
	264	26	53	79	106	132	158	185	211	238	264
	263	26	53	79	105	132	158	184	210	237	263
	262	26	52	79	105	131	157	183	210	236	262
	261	26	52	78	104	131	157	183	209	235	261
	260	26	52	78	104	130	156	182	208	234	260
	259	26	52	78	104	130	155	181	207	233	259
	258	26	52	77	103	129	155	181	206	232	258
	257	26	51	77	103	129	154	180	206	231	257
	256	26	51	77	102	128	154	179	205	230	256
	255	26	51	77	102	128	153	179	204	230	255
	254	25	51	76	102	127	152	178	203	229	254
	253	25	51	76	101	127	152	177	202	228	253
	252	25	50	76	101	126	151	176	202	227	252
	251	25	50	75	100	126	151	176	201	226	251
	250	25	50	75	100	125	150	175	200	225	250
	249	25	50	75	100	125	149	174	199	224	249
	248	25	50	74	99	124	149	174	198	223	248
	247	25	49	74	99	124	148	173	198	222	247
	246	25	49	74	98	123	148	172	197	221	246
	245	25	49	74	98	123	147	172	196	221	245
	244	24	49	73	98	122	146	171	195	220	244
	243	24	49	73	97	122	146	170	194	219	243
	242	24	48	73	97	121	145	169	194	218	242
	241	24	48	72	96	121	145	169	193	217	241
	240	24	48	72	96	120	144	168	192	216	240
	Diff.	1	2	3	4	5	6	7	8	9	Diff.

TABLE 54. — *Continued*

LOGARITHMS OF NUMBERS

N.	0	1	2	3	4	5	6	7	8	9	Diff.
180	255273	5514	5755	5996	6237	6477	6718	6958	7198	7439	241
181	7679	7918	8158	8398	8637	8877	9116	9355	9594	9833	239
182	260071	0310	0548	0787	1025	1263	1501	1739	1976	2214	238
183	2451	2688	2925	3162	3399	3636	3873	4109	4346	4582	237
184	4818	5054	5290	5525	5761	5996	6232	6467	6702	6937	235
185	267172	7406	7641	7875	8110	8344	8578	8812	9046	9279	234
186	9513	9746	9980	*0213	*0446	*0679	*0912	*1144	*1377	*1609	233
187	271842	2074	2306	2538	2770	3001	3233	3464	3696	3927	232
188	4158	4389	4620	4850	5081	5311	5542	5772	6002	6232	230
189	6462	6692	6921	7151	7380	7609	7838	8067	8296	8525	229
190	278754	8982	9211	9439	9667	9895	*0123	*0351	*0578	*0806	228
191	281033	1261	1488	1715	1942	2169	2396	2622	2849	3075	227
192	3301	3527	3753	3979	4205	4431	4656	4882	5107	5332	226
193	5557	5782	6007	6232	6456	6681	6905	7130	7354	7578	225
194	7802	8026	8249	8473	8696	8920	9143	9366	9589	9812	223
195	290035	0257	0480	0702	0925	1147	1369	1591	1813	2034	222
196	2256	2478	2699	2920	3141	3363	3584	3804	4025	4246	221
197	4466	4687	4907	5127	5347	5567	5787	6007	6226	6446	220
198	6665	6884	7104	7323	7542	7761	7979	8198	8416	8635	219
199	8853	9071	9289	9507	9725	9943	*0161	*0378	*0595	*0813	218
200	301030	1247	1464	1681	1898	2114	2331	2547	2764	2980	217
201	3196	3412	3628	3844	4059	4275	4491	4706	4921	5136	216
202	5351	5566	5781	5996	6211	6425	6639	6854	7068	7282	215
203	7496	7710	7924	8137	8351	8564	8778	8991	9204	9417	213
204	9630	9843	*0056	*0268	*0481	*0693	*0906	*1118	*1330	*1542	212

N.	Diff.	1	2	3	4	5	6	7	8	9	Diff.
PROPORTIONAL PARTS	239	24	48	72	96	120	143	167	191	215	239
	238	24	48	71	95	119	143	167	190	214	238
	237	24	47	71	95	119	142	166	190	213	237
	236	24	47	71	94	118	142	165	189	212	236
	235	24	47	71	94	118	141	165	188	212	235
	234	23	47	70	94	117	140	164	187	211	234
	233	23	47	70	93	117	140	163	186	210	233
	232	23	46	70	93	116	139	162	186	209	232
	231	23	46	69	92	116	139	162	185	208	231
	230	23	46	69	92	115	138	161	184	207	230
	229	23	46	69	92	115	137	160	183	206	229
	228	23	46	68	91	114	137	160	182	205	228
	227	23	45	68	91	114	136	159	182	204	227
	226	23	45	68	90	113	136	158	181	203	226
	225	23	45	68	90	113	135	158	180	203	225
	224	22	45	67	90	112	134	157	179	202	224
	223	22	45	67	89	112	134	156	178	201	223
	222	22	44	67	89	111	133	155	178	200	222
	221	22	44	66	88	111	133	155	177	199	221
	220	22	44	66	88	110	132	154	176	198	220
	219	22	44	66	88	110	131	153	175	197	219
	218	22	44	65	87	109	131	153	174	196	218
	217	22	43	65	87	109	130	152	174	195	217
	216	22	43	65	86	108	130	151	173	194	216
	215	22	43	65	86	108	129	151	172	194	215
	214	21	43	64	86	107	128	150	171	193	214
	213	21	43	64	85	107	128	149	170	192	213
	212	21	42	64	85	106	127	148	170	191	212
	Diff.	*1*	*2*	*3*	*4*	*5*	*6*	*7*	*8*	*9*	Diff.

TABLE 54. — *Continued*

LOGARITHMS OF NUMBERS

N.	0	1	2	3	4	5	6	7	8	9	Diff.
205	311754	1966	2177	2389	2600	2812	3023	3234	3445	3656	211
206	3867	4078	4289	4499	4710	4920	5130	5340	5551	5760	210
207	5970	6180	6390	6599	6809	7018	7227	7436	7646	7854	209
208	8063	8272	8481	8689	8898	9106	9314	9522	9730	9938	208
209	320146	0354	0562	0769	0977	1184	1391	1598	1805	2012	207
210	322219	2426	2633	2839	3046	3252	3458	3665	3871	4077	206
211	4282	4488	4694	4899	5105	5310	5516	5721	5926	6131	205
212	6336	6541	6745	6950	7155	7359	7563	7767	7972	8176	204
213	8380	8583	8787	8991	9194	9398	9601	9805	*0008	*0211	203
214	330414	0617	0819	1022	1225	1427	1630	1832	2034	2236	202
215	332438	2640	2842	3044	3246	3447	3649	3850	4051	4253	202
216	4454	4655	4856	5057	5257	5458	5658	5859	6059	6260	201
217	6460	6660	6860	7060	7260	7459	7659	7858	8058	8257	200
218	8456	8656	8855	9054	9253	9451	9650	9849	*0047	*0246	199
219	340444	0642	0841	1039	1237	1435	1632	1830	2028	2225	198
220	342423	2620	2817	3014	3212	3409	3606	3802	3999	4196	197
221	4392	4589	4785	4981	5178	5374	5570	5766	5962	6157	196
222	6353	6549	6744	6939	7135	7330	7525	7720	7915	8110	195
223	8305	8500	8694	8889	9083	9278	9472	9666	9860	*0054	194
224	350248	0442	0636	0829	1023	1216	1410	1603	1796	1989	193
225	352183	2375	2568	2761	2954	3147	3339	3532	3724	3916	193
226	4108	4301	4493	4685	4876	5068	5260	5452	5643	5834	192
227	6026	6217	6408	6599	6790	6981	7172	7363	7554	7744	191
228	7935	8125	8316	8506	8696	8886	9076	9266	9456	9646	190
229	9835	*0025	*0215	*0404	*0593	*0783	*0972	*1161	*1350	*1539	189
230	361728	1917	2105	2294	2482	2671	2859	3048	3236	3424	188
231	3612	3800	3988	4176	4363	4551	4739	4926	5113	5301	188
232	5488	5675	5862	6049	6236	6423	6610	6796	6983	7169	187
233	7356	7542	7729	7915	8101	8287	8473	8659	8845	9030	186
234	9216	9401	9587	9772	9958	*0143	*0328	*0513	*0698	*0883	185

N.	Diff.	1	2	3	4	5	6	7	8	9	Diff.
PROPORTIONAL PARTS	**212**	21	42	64	85	106	127	148	170	191	**212**
	211	21	42	63	84	106	127	148	169	190	**211**
	210	21	42	63	84	105	126	147	168	189	**210**
	209	21	42	63	84	105	125	146	167	188	**209**
	208	21	42	62	83	104	125	146	166	187	**208**
	207	21	41	62	83	104	124	145	166	186	**207**
	206	21	41	62	82	103	124	144	165	185	**206**
	205	21	41	62	82	103	123	144	164	185	**205**
	204	20	41	61	82	102	122	143	163	184	**204**
	203	20	41	61	81	102	122	142	162	183	**203**
	202	20	40	61	81	101	121	141	162	182	**202**
	201	20	40	60	80	101	121	141	161	181	**201**
	200	20	40	60	80	100	120	140	160	180	**200**
	199	20	40	60	80	100	119	139	159	179	**199**
	198	20	40	59	79	99	119	139	158	178	**198**
	197	20	39	59	79	99	118	138	158	177	**197**
	196	20	39	59	78	98	118	137	157	176	**196**
	195	20	39	59	78	98	117	137	156	176	**195**
	194	19	39	58	78	97	116	136	155	175	**194**
	193	19	39	58	77	97	116	135	154	174	**193**
	192	19	38	58	77	96	115	134	154	173	**192**
	191	19	38	57	76	96	115	134	153	172	**191**
	190	19	38	57	76	95	114	133	152	171	**190**
	189	19	38	57	76	95	113	132	151	170	**189**
	188	19	38	56	75	94	113	132	150	169	**188**
	Diff.	1	2	3	4	5	6	7	8	9	Diff.

TABLE 54. — *Continued*

LOGARITHMS OF NUMBERS

N.	0	1	2	3	4	5	6	7	8	9	Diff.
235	371068	1253	1437	1622	1806	1991	2175	2360	2544	2728	184
236	2912	3096	3280	3464	3647	3831	4015	4198	4382	4565	184
237	4748	4932	5115	5298	5481	5664	5846	6029	6212	6394	183
238	6577	6759	6942	7124	7306	7488	7670	7852	8034	8216	182
239	8398	8580	8761	8943	9124	9306	9487	9668	9849	*0030	181
240	380211	0392	0573	0754	0934	1115	1296	1476	1656	1837	181
241	2017	2197	2377	2557	2737	2917	3097	3277	3456	3636	180
242	3815	3995	4174	4353	4533	4712	4891	5070	5249	5428	179
243	5606	5785	5964	6142	6321	6499	6677	6856	7034	7212	178
244	7390	7568	7746	7923	8101	8279	8456	8634	8811	8989	178
245	389166	9343	9520	9698	9875	*0051	*0228	*0405	*0582	*0759	177
246	390935	1112	1288	1464	1641	1817	1993	2169	2345	2521	176
247	2697	2873	3048	3224	3400	3575	3751	3926	4101	4277	176
248	4452	4627	4802	4977	5152	5326	5501	5676	5850	6025	175
249	6199	6374	6548	6722	6896	7071	7245	7419	7592	7766	174
250	397940	8114	8287	8461	8634	8808	8981	9154	9328	9501	173
251	9674	9847	*0020	*0192	*0365	*0538	*0711	*0883	*1056	*1228	173
252	401401	1573	1745	1917	2089	2261	2433	2605	2777	2949	172
253	3121	3292	3464	3635	3807	3978	4149	4320	4492	4663	171
254	4834	5005	5176	5346	5517	5688	5858	6029	6199	6370	171
255	406540	6710	6881	7051	7221	7391	7561	7731	7901	8070	170
256	8240	8410	8579	8749	8918	9087	9257	9426	9595	9764	169
257	9933	*0102	*0271	*0440	*0609	*0777	*0946	*1114	*1283	*1451	169
258	411620	1788	1956	2124	2293	2461	2629	2796	2964	3132	168
259	3300	3467	3635	3803	3970	4137	4305	4472	4639	4806	167
260	414973	5140	5307	5474	5641	5808	5974	6141	6308	6474	167
261	6641	6807	6973	7139	7306	7472	7638	7804	7970	8135	166
262	8301	8467	8633	8798	8964	9129	9295	9460	9625	9791	165
263	9956	*0121	*0286	*0451	*0616	*0781	*0945	*1110	*1275	*1439	165
264	421604	1768	1933	2097	2261	2426	2590	2754	2918	3082	164

N.	Diff.	1	2	3	4	5	6	7	8	9	Diff.
PROPORTIONAL PARTS	187	19	37	56	75	94	112	131	150	168	187
	186	19	37	56	74	93	112	130	149	167	186
	185	19	37	56	74	93	111	130	148	167	185
	184	18	37	55	74	92	110	129	147	166	184
	183	18	37	55	73	92	110	128	146	165	183
	182	18	36	55	73	91	109	127	146	164	182
	181	18	36	54	72	91	109	127	145	163	181
	180	18	36	54	72	90	108	126	144	162	180
	179	18	36	54	72	90	107	125	143	161	179
	178	18	36	53	71	89	107	125	142	160	178
	177	18	35	53	71	89	106	124	142	159	177
	176	18	35	53	70	88	106	123	141	158	176
	175	18	35	53	70	88	105	123	140	158	175
	174	17	35	52	70	87	104	122	139	157	174
	173	17	35	52	69	87	104	121	138	156	173
	172	17	34	52	69	86	103	120	138	155	172
	171	17	34	51	68	86	103	120	137	154	171
	170	17	34	51	68	85	102	119	136	153	170
	169	17	34	51	68	85	101	118	135	152	169
	168	17	34	50	67	84	101	118	134	151	168
	167	17	33	50	67	84	100	117	134	150	167
	166	17	33	50	66	83	100	116	133	149	166
	165	17	33	50	66	83	99	116	132	149	165
	164	16	33	49	66	82	98	115	131	148	164
	Diff.	1	2	3	4	5	6	7	8	9	Diff.

TABLE 54.—*Continued*

LOGARITHMS OF NUMBERS

N.	0	1	2	3	4	5	6	7	8	9	Diff.
265	423246	3410	3574	3737	3901	4065	4228	4392	4555	4718	164
266	4882	5045	5208	5371	5534	5697	5860	6023	6186	6349	163
267	6511	6674	6836	6999	7161	7324	7486	7648	7811	7973	162
268	8135	8297	8459	8621	8783	8944	9106	9268	9429	9591	162
269	9752	9914	*0075	*0236	*0398	*0559	*0720	*0881	*1042	*1203	161
270	431364	1525	1685	1846	2007	2167	2328	2488	2649	2809	161
271	2969	3130	3290	3450	3610	3770	3930	4090	4249	4409	160
272	4569	4729	4888	5048	5207	5367	5526	5685	5844	6004	159
273	6163	6322	6481	6640	6799	6957	7116	7275	7433	7592	159
274	7751	7909	8067	8226	8384	8542	8701	8859	9017	9175	158
275	439333	9491	9648	9806	9964	*0122	*0279	*0437	*0594	*0752	158
276	440909	1066	1224	1381	1538	1695	1852	2009	2166	2323	157
277	2480	2637	2793	2950	3106	3263	3419	3576	3732	3889	157
278	4045	4201	4357	4513	4669	4825	4981	5137	5293	5449	156
279	5604	5760	5915	6071	6226	6382	6537	6692	6848	7003	155
280	447158	7313	7468	7623	7778	7933	8088	8242	8397	8552	155
281	8706	8861	9015	9170	9324	9478	9633	9787	9941	*0095	154
282	450249	0403	0557	0711	0865	1018	1172	1326	1479	1633	154
283	1786	1940	2093	2247	2400	2553	2706	2859	3012	3165	153
284	3318	3471	3624	3777	3930	4082	4235	4387	4540	4692	153
285	454845	4997	5150	5302	5454	5606	5758	5910	6062	6214	152
286	6366	6518	6670	6821	6973	7125	7276	7428	7579	7731	152
287	7882	8033	8184	8336	8487	8638	8789	8940	9091	9242	151
288	9392	9543	9694	9845	9995	*0146	*0296	*0447	*0597	*0748	151
289	460898	1048	1198	1348	1499	1649	1799	1948	2098	2248	150
290	462398	2548	2697	2847	2997	3146	3296	3445	3594	3744	150
291	3893	4042	4191	4340	4490	4639	4788	4936	5085	5234	149
292	5383	5532	5680	5829	5977	6126	6274	6423	6571	6719	149
293	6868	7016	7164	7312	7460	7608	7756	7904	8052	8200	148
294	8347	8495	8643	8790	8938	9085	9233	9380	9527	9675	148
295	469822	9969	*0116	*0263	*0410	*0557	*0704	*0851	*0998	*1145	147
296	471292	1438	1585	1732	1878	2025	2171	2318	2464	2610	146
297	2756	2903	3049	3195	3341	3487	3633	3779	3925	4071	146
298	4216	4362	4508	4653	4799	4944	5090	5235	5381	5526	146
299	5671	5816	5962	6107	6252	6397	6542	6687	6832	6976	145

N.	Diff.	1	2	3	4	5	6	7	8	9	Diff.
PROPORTIONAL PARTS	164	16	33	49	66	82	98	115	131	148	164
	163	16	33	49	65	82	98	114	130	147	163
	162	16	32	49	65	81	97	113	130	146	162
	161	16	32	48	64	81	97	113	129	145	161
	160	16	32	48	64	80	96	112	128	144	160
	159	16	32	48	64	80	95	111	127	143	159
	158	16	32	47	63	79	95	111	126	142	158
	157	16	31	47	63	79	94	110	126	141	157
	156	16	31	47	62	78	94	109	125	140	156
	155	16	31	47	62	78	93	109	124	140	155
	154	15	31	46	62	77	92	108	123	139	154
	153	15	31	46	61	77	92	107	122	138	153
	152	15	30	46	61	76	91	106	122	137	152
	151	15	30	45	60	76	91	106	121	136	151
	150	15	30	45	60	75	90	105	120	135	150
	149	15	30	45	60	75	89	104	119	134	149
	148	15	30	44	59	74	89	104	118	133	148
	147	15	29	44	59	74	88	103	118	132	147
	146	15	29	44	58	73	88	102	117	131	146
	145	15	29	44	58	73	87	102	116	131	145
	144	14	29	43	58	72	86	101	115	130	144
	143	14	29	43	57	72	86	100	114	129	143
	Diff.	1	2	3	4	5	6	7	8	9	Diff.

TABLE 54. — *Continued*

LOGARITHMS OF NUMBERS

N.	0	1	2	3	4	5	6	7	8	9	Diff.
300	477121	7266	7411	7555	7700	7844	7989	8133	8278	8422	145
301	8566	8711	8855	8999	9143	9287	9431	9575	9719	9863	144
302	480007	0151	0294	0438	0582	0725	0869	1012	1156	1299	144
303	1443	1586	1729	1872	2016	2159	2302	2445	2588	2731	143
304	2874	3016	3159	3302	3445	3587	3730	3872	4015	4157	143
305	484300	4442	4585	4727	4869	5011	5153	5295	5437	5579	142
306	5721	5863	6005	6147	6289	6430	6572	6714	6855	6997	142
307	7138	7280	7421	7563	7704	7845	7986	8127	8269	8410	141
308	8551	8692	8833	8974	9114	9255	9396	9537	9677	9818	141
309	9958	*0099	*0239	*0380	*0520	*0661	*0801	*0941	*1081	*1222	140
310	491362	1502	1642	1782	1922	2062	2201	2341	2481	2621	140
311	2760	2900	3040	3179	3319	3458	3597	3737	3876	4015	139
312	4155	4294	4433	4572	4711	4850	4989	5128	5267	5406	139
313	5544	5683	5822	5960	6099	6238	6376	6515	6653	6791	139
314	6930	7068	7206	7344	7483	7621	7759	7897	8035	8173	138
315	498311	8448	8586	8724	8862	8999	9137	9275	9412	9550	138
316	9687	9824	9962	*0099	*0236	*0374	*0511	*0648	*0785	*0922	137
317	501059	1196	1333	1470	1607	1744	1880	2017	2154	2291	137
318	2427	2564	2700	2837	2973	3109	3246	3382	3518	3655	136
319	3791	3927	4063	4199	4335	4471	4607	4743	4878	5014	136
320	505150	5286	5421	5557	5693	5828	5964	6099	6234	6370	136
321	6505	6640	6776	6911	7046	7181	7316	7451	7586	7721	135
322	7856	7991	8126	8260	8395	8530	8664	8799	8934	9068	135
323	9203	9337	9471	9606	9740	9874	*0009	*0143	*0277	*0411	134
324	510545	0679	0813	0947	1081	1215	1349	1482	1616	1750	134
325	511883	2017	2151	2284	2418	2551	2684	2818	2951	3084	133
326	3218	3351	3484	3617	3750	3883	4016	4149	4282	4415	133
327	4548	4681	4813	4946	5079	5211	5344	5476	5609	5741	133
328	5874	6006	6139	6271	6403	6535	6668	6800	6932	7064	132
329	7196	7328	7460	7592	7724	7855	7987	8119	8251	8382	132
330	518514	8646	8777	8909	9040	9171	9303	9434	9566	9697	131
331	9828	9959	*0090	*0221	*0353	*0484	*0615	*0745	*0876	*1007	131
332	521138	1269	1400	1530	1661	1792	1922	2053	2183	2314	131
333	2444	2575	2705	2835	2966	3096	3226	3356	3486	3616	130
334	3746	3876	4006	4136	4266	4396	4526	4656	4785	4915	130
335	525045	5174	5304	5434	5563	5693	5822	5951	6081	6210	129
336	6339	6469	6598	6727	6856	6985	7114	7243	7372	7501	129
337	7630	7759	7888	8016	8145	8274	8402	8531	8660	8788	129
338	8917	9045	9174	9302	9430	9559	9687	9815	9943	*0072	128
339	530200	0328	0456	0584	0712	0840	0968	1096	1223	1351	128

	N.	Diff.	1	2	3	4	5	6	7	8	9	Diff.
PROPORTIONAL PARTS		142	14	28	43	57	71	85	99	114	128	142
		141	14	28	42	56	71	85	99	113	127	141
		140	14	28	42	56	70	84	98	112	126	140
		139	14	28	42	56	70	83	97	111	125	139
		138	14	28	41	55	69	83	97	110	124	138
		137	14	27	41	55	69	82	96	110	123	137
		136	14	27	41	54	68	82	95	109	122	136
		135	14	27	41	54	68	81	95	108	122	135
		134	13	27	40	54	67	80	94	107	121	134
		133	13	27	40	53	67	80	93	106	120	133
		132	13	26	40	53	66	79	92	106	119	132
		131	13	26	39	52	66	79	92	105	118	131
		130	13	26	39	52	65	78	91	104	117	130
		129	13	26	39	52	65	77	90	103	116	129
		128	13	26	38	51	64	77	90	102	115	128
		127	13	25	38	51	64	76	89	102	114	127
		Diff.	1	2	3	4	5	6	7	8	9	Diff.

TABLE 54. — *Continued*

LOGARITHMS OF NUMBERS

N.	0	1	2	3	4	5	6	7	8	9	Diff.
340	531479	1607	1734	1862	1990	2117	2245	2372	2500	2627	128
341	2754	2882	3009	3136	3264	3391	3518	3645	3772	3899	127
342	4026	4153	4280	4407	4534	4661	4787	4914	5041	5167	127
343	5294	5421	5547	5674	5800	5927	6053	6180	6306	6432	126
344	6558	6685	6811	6937	7063	7189	7315	7441	7567	7693	126
345	537819	7945	8071	8197	8322	8448	8574	8699	8825	8951	126
346	9076	9202	9327	9452	9578	9703	9829	9954	*0079	*0204	125
347	540329	0455	0580	0705	0830	0955	1080	1205	1330	1454	125
348	1579	1704	1829	1953	2078	2203	2327	2452	2576	2701	125
349	2825	2950	3074	3199	3323	3447	3571	3696	3820	3944	124
350	544068	4192	4316	4440	4564	4688	4812	4936	5060	5183	124
351	5307	5431	5555	5678	5802	5925	6049	6172	6296	6419	124
352	6543	6666	6789	6913	7036	7159	7282	7405	7529	7652	123
353	7775	7898	8021	8144	8267	8389	8512	8635	8758	8881	123
354	9003	9126	9249	9371	9494	9616	9739	9861	9984	*0106	123
355	550228	0351	0473	0595	0717	0840	0962	1084	1206	1328	122
356	1450	1572	1694	1816	1938	2060	2181	2303	2425	2547	122
357	2668	2790	2911	3033	3155	3276	3398	3519	3640	3762	121
358	3883	4004	4126	4247	4368	4489	4610	4731	4852	4973	121
359	5094	5215	5336	5457	5578	5699	5820	5940	6061	6182	121
360	556303	6423	6544	6664	6785	6905	7026	7146	7267	7387	120
361	7507	7627	7748	7868	7988	8108	8228	8349	8469	8589	120
362	8709	8829	8948	9068	9188	9308	9428	9548	9667	9787	120
363	9907	*0026	*0146	*0265	*0385	*0504	*0624	*0743	*0863	*0982	119
364	561101	1221	1340	1459	1578	1698	1817	1936	2055	2174	119
365	562293	2412	2531	2650	2769	2887	3006	3125	3244	3362	119
366	3481	3600	3718	3837	3955	4074	4192	4311	4429	4548	119
367	4666	4784	4903	5021	5139	5257	5376	5494	5612	5730	118
368	5848	5966	6084	6202	6320	6437	6555	6673	6791	6909	118
369	7026	7144	7262	7379	7497	7614	7732	7849	7967	8084	118
370	568202	8319	8436	8554	8671	8788	8905	9023	9140	9257	117
371	9374	9491	9608	9725	9842	9959	*0076	*0193	*0309	*0426	117
372	570543	0660	0776	0893	1010	1126	1243	1359	1476	1592	117
373	1709	1825	1942	2058	2174	2291	2407	2523	2639	2755	116
374	2872	2988	3104	3220	3336	3452	3568	3684	3800	3915	116
375	574031	4147	4263	4379	4494	4610	4726	4841	4957	5072	116
376	5188	5303	5419	5534	5650	5765	5880	5996	6111	6226	115
377	6341	6457	6572	6687	6802	6917	7032	7147	7262	7377	115
378	7492	7607	7722	7836	7951	8066	8181	8295	8410	8525	115
379	8639	8754	8868	8983	9097	9212	9326	9441	9555	9669	114

N.	Diff.	1	2	3	4	5	6	7	8	9	Diff.
PROP. PARTS	128	13	26	38	51	64	77	90	102	115	128
	127	13	25	38	51	64	76	89	102	114	127
	126	13	25	38	50	63	76	88	101	113	126
	125	13	25	38	50	63	75	88	100	113	125
	124	12	25	37	50	62	74	87	99	112	124
	123	12	25	37	49	62	74	86	98	111	123
	122	12	24	37	49	61	73	85	98	110	122
	121	12	24	36	48	61	73	85	97	109	121
	120	12	24	36	48	60	72	84	96	108	120
	119	12	24	36	48	60	71	83	95	107	119
	118	12	24	35	47	59	71	83	94	106	118
	117	12	23	35	47	59	70	82	94	105	117
	116	12	23	35	46	58	70	81	93	104	116
	Diff.	1	2	3	4	5	6	7	8	9	Diff.

TABLE 54. — *Continued*

LOGARITHMS OF NUMBERS

N.	0	1	2	3	4	5	6	7	8	9	Diff.
380	579784	9898	*0012	*0126	*0241	*0355	*0469	*0583	*0697	*0811	114
381	580925	1039	1153	1267	1381	1495	1608	1722	1836	1950	114
382	2063	2177	2291	2404	2518	2631	2745	2858	2972	3085	114
383	3199	3312	3426	3539	3652	3765	3879	3992	4105	4218	113
384	4331	4444	4557	4670	4783	4896	5009	5122	5235	5348	113
385	585461	5574	5686	5799	5912	6024	6137	6250	6362	6475	113
386	6587	6700	6812	6925	7037	7149	7262	7374	7486	7599	112
387	7711	7823	7935	8047	8160	8272	8384	8496	8608	8720	112
388	8832	8944	9056	9167	9279	9391	9503	9615	9726	9838	112
389	9950	*0061	*0173	*0284	*0396	*0507	*0619	*0730	*0842	*0953	112
390	591065	1176	1287	1399	1510	1621	1732	1843	1955	2066	111
391	2177	2288	2399	2510	2621	2732	2843	2954	3064	3175	111
392	3286	3397	3508	3618	3729	3840	3950	4061	4171	4282	111
393	4393	4503	4614	4724	4834	4945	5055	5165	5276	5386	110
394	5496	5606	5717	5827	5937	6047	6157	6267	6377	6487	110
395	596597	6707	6817	6927	7037	7146	7256	7366	7476	7586	110
396	7695	7805	7914	8024	8134	8243	8353	8462	8572	8681	110
397	8791	8900	9009	9119	9228	9337	9446	9556	9665	9774	109
398	9883	9992	*0101	*0210	*0319	*0428	*0537	*0646	*0755	*0864	109
399	600973	1082	1191	1299	1408	1517	1625	1734	1843	1951	109
400	602060	2169	2277	2386	2494	2603	2711	2819	2928	3036	108
401	3144	3253	3361	3469	3577	3686	3794	3902	4010	4118	108
402	4226	4334	4442	4550	4658	4766	4874	4982	5089	5197	108
403	5305	5413	5521	5628	5736	5844	5951	6059	6166	6274	108
404	6381	6489	6596	6704	6811	6919	7026	7133	7241	7348	107
405	607455	7562	7669	7777	7884	7991	8098	8205	8312	8419	107
406	8526	8633	8740	8847	8954	9061	9167	9274	9381	9488	107
407	9594	9701	9808	9914	*0021	*0128	*0234	*0341	*0447	*0554	107
408	610660	0767	0873	0979	1086	1192	1298	1405	1511	1617	106
409	1723	1829	1936	2042	2148	2254	2360	2466	2572	2678	106
410	612784	2890	2996	3102	3207	3313	3419	3525	3630	3736	106
411	3842	3947	4053	4159	4264	4370	4475	4581	4686	4792	106
412	4897	5003	5108	5213	5319	5424	5529	5634	5740	5845	105
413	5950	6055	6160	6265	6370	6476	6581	6686	6790	6895	105
414	7000	7105	7210	7315	7420	7525	7629	7734	7839	7943	105
415	618048	8153	8257	8362	8466	8571	8676	8780	8884	8989	105
416	9093	9198	9302	9406	9511	9615	9719	9824	9928	*0032	104
417	620136	0240	0344	0448	0552	0656	0760	0864	0968	1072	104
418	1176	1280	1384	1488	1592	1695	1799	1903	2007	2110	104
419	2214	2318	2421	2525	2628	2732	2835	2939	3042	3146	104

N.	Diff.	1	2	3	4	5	6	7	8	9	Diff.
PROP. PARTS	115	12	23	35	46	58	69	81	92	104	115
	114	11	23	34	46	57	68	80	91	103	114
	113	11	23	34	45	57	68	79	90	102	113
	112	11	22	34	45	56	67	78	90	101	112
	111	11	22	33	44	56	67	78	89	100	111
	110	11	22	33	44	55	66	77	88	99	110
	109	11	22	33	44	55	65	76	87	98	109
	108	11	22	32	43	54	65	76	86	97	108
	107	11	21	32	43	54	64	75	86	96	107
	106	11	21	32	42	53	64	74	85	95	106
	105	11	21	32	42	53	63	74	84	95	105
	104	10	21	31	42	52	62	73	83	94	104
	103	10	21	31	41	52	62	72	82	93	103
	Diff.	1	2	3	4	5	6	7	8	9	Diff.

TABLE 54.—*Continued*

LOGARITHMS OF NUMBERS

0	1	2	3	4	5	6	7	8	9	Diff.
623249	3353	3456	3559	3663	3766	3869	3973	4076	4179	103
4282	4385	4488	4591	4695	4798	4901	5004	5107	5210	103
5312	5415	5518	5621	5724	5827	5929	6032	6135	6238	103
6340	6443	6546	6648	6751	6853	6956	7058	7161	7263	103
7366	7468	7571	7673	7775	7878	7980	8082	8185	8287	102
628389	8491	8593	8695	8797	8900	9002	9104	9206	9308	102
9410	9512	9613	9715	9817	9919	*0021	*0123	*0224	*0326	102
630428	0530	0631	0733	0835	0936	1038	1139	1241	1342	102
1444	1545	1647	1748	1849	1951	2052	2153	2255	2356	101
2457	2559	2660	2761	2862	2963	3064	3165	3266	3367	101
633468	3569	3670	3771	3872	3973	4074	4175	4276	4376	101
4477	4578	4679	4779	4880	4981	5081	5182	5283	5383	101
5484	5584	5685	5785	5886	5986	6087	6187	6287	6388	100
6488	6588	6688	6789	6889	6989	7089	7189	7290	7390	100
7490	7590	7690	7790	7890	7990	8090	8190	8290	8389	100
638489	8589	8689	8789	8888	8988	9088	9188	9287	9387	100
9486	9586	9686	9785	9885	9984	*0084	*0183	*0283	*0382	99
640481	0581	0680	0779	0879	0978	1077	1177	1276	1375	99
1474	1573	1672	1771	1871	1970	2069	2168	2267	2366	99
2465	2563	2662	2761	2860	2959	3058	3156	3255	3354	99
643453	3551	3650	3749	3847	3946	4044	4143	4242	4340	98
4439	4537	4636	4734	4832	4931	5029	5127	5226	5324	98
5422	5521	5619	5717	5815	5913	6011	6110	6208	6306	98
6404	6502	6600	6698	6796	6894	6992	7089	7187	7285	98
7383	7481	7579	7676	7774	7872	7969	8067	8165	8262	98
648360	8458	8555	8653	8750	8848	8945	9043	9140	9237	97
9335	9432	9530	9627	9724	9821	9919	*0016	*0113	*0210	97
650308	0405	0502	0599	0696	0793	0890	0987	1084	1181	97
1278	1375	1472	1569	1666	1762	1859	1956	2053	2150	97
2246	2343	2440	2536	2633	2730	2826	2923	3019	3116	97
653213	3309	3405	3502	3598	3695	3791	3888	3984	4080	96
4177	4273	4369	4465	4562	4658	4754	4850	4946	5042	96
5138	5235	5331	5427	5523	5619	5715	5810	5906	6002	96
6098	6194	6290	6386	6482	6577	6673	6769	6864	6960	96
7056	7152	7247	7343	7438	7534	7629	7725	7820	7916	96
658011	8107	8202	8298	8393	8488	8584	8679	8774	8870	95
8965	9060	9155	9250	9346	9441	9536	9631	9726	9821	95
9916	*0011	*0106	*0201	*0296	*0391	*0486	*0581	*0676	*0771	95
660865	0960	1055	1150	1245	1339	1434	1529	1623	1718	95
1813	1907	2002	2096	2191	2286	2380	2475	2569	2663	95
662758	2852	2947	3041	3135	3230	3324	3418	3512	3607	94
3701	3795	3889	3983	4078	4172	4266	4360	4454	4548	94
4642	4736	4830	4924	5018	5112	5206	5299	5393	5487	94
5581	5675	5769	5862	5956	6050	6143	6237	6331	6424	94
6518	6612	6705	6799	6892	6986	7079	7173	7266	7360	94

Diff.	1	2	3	4	5	6	7	8	9	Diff.
104	10	21	31	42	52	62	73	83	94	104
103	10	21	31	41	52	62	72	82	93	103
102	10	20	31	41	51	61	71	82	92	102
101	10	20	30	40	51	61	71	81	91	101
100	10	20	30	40	50	60	70	80	90	100
99	10	20	30	40	50	59	69	79	89	99
98	10	20	29	39	49	59	69	78	88	98
97	10	19	29	39	49	58	68	78	87	97
96	10	19	29	38	48	58	67	77	86	96
95	10	19	29	38	48	57	67	76	86	95
Diff.	1	2	3	4	5	6	7	8	9	Diff.

TABLE 54. — *Continued*

LOGARITHMS OF NUMBERS

N.	0	1	2	3	4	5	6	7	8	9	Diff.
465	667453	7546	7640	7733	7826	7920	8013	8106	8199	8293	93
466	8386	8479	8572	8665	8759	8852	8945	9038	9131	9224	93
467	9317	9410	9503	9596	9689	9782	9875	9967	*0060	*0153	93
468	670246	0339	0431	0524	0617	0710	0802	0895	0988	1080	93
469	1173	1265	1358	1451	1543	1636	1728	1821	1913	2005	93
470	672098	2190	2283	2375	2467	2560	2652	2744	2836	2929	92
471	3021	3113	3205	3297	3390	3482	3574	3666	3758	3850	92
472	3942	4034	4126	4218	4310	4402	4494	4586	4677	4769	92
473	4861	4953	5045	5137	5228	5320	5412	5503	5595	5687	92
474	5778	5870	5962	6053	6145	6236	6328	6419	6511	6602	92
475	676694	6785	6876	6968	7059	7151	7242	7333	7424	7516	91
476	7607	7698	7789	7881	7972	8063	8154	8245	8336	8427	91
477	8518	8609	8700	8791	8882	8973	9064	9155	9246	9337	91
478	9428	9519	9610	9700	9791	9882	9973	*0063	*0154	*0245	91
479	680336	0426	0517	0607	0698	0789	0879	0970	1060	1151	91
480	681241	1332	1422	1513	1603	1693	1784	1874	1964	2055	90
481	2145	2235	2326	2416	2506	2596	2686	2777	2867	2957	90
482	3047	3137	3227	3317	3407	3497	3587	3677	3767	3857	90
483	3947	4037	4127	4217	4307	4396	4486	4576	4666	4756	90
484	4845	4935	5025	5114	5204	5294	5383	5473	5563	5652	90
485	685742	5831	5921	6010	6100	6189	6279	6368	6458	6547	89
486	6636	6726	6815	6904	6994	7083	7172	7261	7351	7440	89
487	7529	7618	7707	7796	7886	7975	8064	8153	8242	8331	89
488	8420	8509	8598	8687	8776	8865	8953	9042	9131	9220	89
489	9309	9398	9486	9575	9664	9753	9841	9930	*0019	*0107	89
490	690196	0285	0373	0462	0550	0639	0728	0816	0905	0993	89
491	1081	1170	1258	1347	1435	1524	1612	1700	1789	1877	88
492	1965	2053	2142	2230	2318	2406	2494	2583	2671	2759	88
493	2847	2935	3023	3111	3199	3287	3375	3463	3551	3639	88
494	3727	3815	3903	3991	4078	4166	4254	4342	4430	4517	88
495	694605	4693	4781	4868	4956	5044	5131	5219	5307	5394	88
496	5482	5569	5657	5744	5832	5919	6007	6094	6182	6269	87
497	6356	6444	6531	6618	6706	6793	6880	6968	7055	7142	87
498	7229	7317	7404	7491	7578	7665	7752	7839	7926	8014	87
499	8101	8188	8275	8362	8449	8535	8622	8709	8796	8883	87
500	698970	9057	9144	9231	9317	9404	9491	9578	9664	9751	87
501	9838	9924	*0011	*0098	*0184	*0271	*0358	*0444	*0531	*0617	87
502	700704	0790	0877	0963	1050	1136	1222	1309	1395	1482	86
503	1568	1654	1741	1827	1913	1999	2086	2172	2258	2344	86
504	2431	2517	2603	2689	2775	2861	2947	3033	3119	3205	86
505	703291	3377	3463	3549	3635	3721	3807	3893	3979	4065	86
506	4151	4236	4322	4408	4494	4579	4665	4751	4837	4922	86
507	5008	5094	5179	5265	5350	5436	5522	5607	5693	5778	86
508	5864	5949	6035	6120	6206	6291	6376	6462	6547	6632	85
509	6718	6803	6888	6974	7059	7144	7229	7315	7400	7485	85

N.	Diff.	1	2	3	4	5	6	7	8	9	Diff.
PROP. PARTS	94	9	19	28	38	47	56	66	75	85	94
	93	9	19	28	37	47	56	65	74	84	93
	92	9	18	28	37	46	55	64	74	83	92
	91	9	18	27	36	46	55	64	73	82	91
	90	9	18	27	36	45	54	63	72	81	90
	89	9	18	27	36	45	53	62	71	80	89
	88	9	18	26	35	44	53	62	70	79	88
	87	9	17	26	35	44	52	61	70	78	87
	86	9	17	26	34	43	52	60	69	77	86
	85	9	17	26	34	43	51	60	68	77	85
	Diff.	1	2	3	4	5	6	7	8	9	Diff.

TABLE 54.—*Continued*

LOGARITHMS OF NUMBERS

N.	0	1	2	3	4	5	6	7	8	9	Diff.
510	707570	7655	7740	7826	7911	7996	8081	8166	8251	8336	85
511	8421	8506	8591	8676	8761	8846	8931	9015	9100	9185	85
512	9270	9355	9440	9524	9609	9694	9779	9863	9948	*0033	85
513	710117	0202	0287	0371	0456	0540	0625	0710	0794	0879	85
514	0963	1048	1132	1217	1301	1385	1470	1554	1639	1723	84
515	711807	1892	1976	2060	2144	2229	2313	2397	2481	2566	84
516	2650	2734	2818	2902	2986	3070	3154	3238	3323	3407	84
517	3491	3575	3659	3742	3826	3910	3994	4078	4162	4246	84
518	4330	4414	4497	4581	4665	4749	4833	4916	5000	5084	84
519	5167	5251	5335	5418	5502	5586	5669	5753	5836	5920	84
520	716003	6087	6170	6254	6337	6421	6504	6588	6671	6754	83
521	6838	6921	7004	7088	7171	7254	7338	7421	7504	7587	83
522	7671	7754	7837	7920	8003	8086	8169	8253	8336	8419	83
523	8502	8585	8668	8751	8834	8917	9000	9083	9165	9248	83
524	9331	9414	9497	9580	9663	9745	9828	9911	9994	*0077	83
525	720159	0242	0325	0407	0490	0573	0655	0738	0821	0903	83
526	0986	1068	1151	1233	1316	1398	1481	1563	1646	1728	82
527	1811	1893	1975	2058	2140	2222	2305	2387	2469	2552	82
528	2634	2716	2798	2881	2963	3045	3127	3209	3291	3374	82
529	3456	3538	3620	3702	3784	3866	3948	4030	4112	4194	82
530	724276	4358	4440	4522	4604	4685	4767	4849	4931	5013	82
531	5095	5176	5258	5340	5422	5503	5585	5667	5748	5830	82
532	5912	5993	6075	6156	6238	6320	6401	6483	6564	6646	82
533	6727	6809	6890	6972	7053	7134	7216	7297	7379	7460	81
534	7541	7623	7704	7785	7866	7948	8029	8110	8191	8273	81
535	728354	8435	8516	8597	8678	8759	8841	8922	9003	9084	81
536	9165	9246	9327	9408	9489	9570	9651	9732	9813	9893	81
537	9974	*0055	*0136	*0217	*0298	*0378	*0459	*0540	*0621	*0702	81
538	730782	0863	0944	1024	1105	1186	1266	1347	1428	1508	81
539	1589	1669	1750	1830	1911	1991	2072	2152	2233	2313	81
540	732394	2474	2555	2635	2715	2796	2876	2956	3037	3117	80
541	3197	3278	3358	3438	3518	3598	3679	3759	3839	3919	80
542	3999	4079	4160	4240	4320	4400	4480	4560	4640	4720	80
543	4800	4880	4960	5040	5120	5200	5279	5359	5439	5519	80
544	5599	5679	5759	5838	5918	5998	6078	6157	6237	6317	80
545	736397	6476	6556	6635	6715	6795	6874	6954	7034	7113	80
546	7193	7272	7352	7431	7511	7590	7670	7749	7829	7908	79
547	7987	8067	8146	8225	8305	8384	8463	8543	8622	8701	79
548	8781	8860	8939	9018	9097	9177	9256	9335	9414	9493	79
549	9572	9651	9731	9810	9889	9968	*0047	*0126	*0205	*0284	79
550	740363	0442	0521	0600	0678	0757	0836	0915	0994	1073	79
551	1152	1230	1309	1388	1467	1546	1624	1703	1782	1860	79
552	1939	2018	2096	2175	2254	2332	2411	2489	2568	2647	79
553	2725	2804	2882	2961	3039	3118	3196	3275	3353	3431	78
554	3510	3588	3667	3745	3823	3902	3980	4058	4136	4215	78

N.	Diff.	1	2	3	4	5	6	7	8	9	Diff.
PROP. PARTS	86	9	17	26	34	43	52	60	69	77	86
	85	9	17	26	34	43	51	60	68	77	85
	84	8	17	25	34	42	50	59	67	76	84
	83	8	17	25	33	42	50	58	66	75	83
	82	8	16	25	33	41	49	57	66	74	82
	81	8	16	24	32	41	49	57	65	73	81
	80	8	16	24	32	40	48	56	64	72	80
	79	8	16	24	32	40	47	55	63	71	79
	Diff.	1	2	3	4	5	6	7	8	9	Diff.

TABLE 54.—*Continued*

LOGARITHMS OF NUMBERS

N.	0	1	2	3	4	5	6	7	8	9	Diff.
555	744293	4371	4449	4528	4606	4684	4762	4840	4919	4997	78
556	5075	5153	5231	5309	5387	5465	5543	5621	5699	5777	78
557	5855	5933	6011	6089	6167	6245	6323	6401	6479	6556	78
558	6634	6712	6790	6868	6945	7023	7101	7179	7256	7334	78
559	7412	7489	7567	7645	7722	7800	7878	7955	8033	8110	78
560	748188	8266	8343	8421	8498	8576	8653	8731	8808	8885	77
561	8963	9040	9118	9195	9272	9350	9427	9504	9582	9659	77
562	9736	9814	9891	9968	*0045	*0123	*0200	*0277	*0354	*0431	77
563	750508	0586	0663	0740	0817	0894	0971	1048	1125	1202	77
564	1279	1356	1433	1510	1587	1664	1741	1818	1895	1972	77
565	752048	2125	2202	2279	2356	2433	2509	2586	2663	2740	77
566	2816	2893	2970	3047	3123	3200	3277	3353	3430	3506	77
567	3583	3660	3736	3813	3889	3966	4042	4119	4195	4272	77
568	4348	4425	4501	4578	4654	4730	4807	4883	4960	5036	76
569	5112	5189	5265	5341	5417	5494	5570	5646	5722	5799	76
570	755875	5951	6027	6103	6180	6256	6332	6408	6484	6560	76
571	6636	6712	6788	6864	6940	7016	7092	7168	7244	7320	76
572	7396	7472	7548	7624	7700	7775	7851	7927	8003	8079	76
573	8155	8230	8306	8382	8458	8533	8609	8685	8761	8836	76
574	8912	8988	9063	9139	9214	9290	9366	9441	9517	9592	76
575	759668	9743	9819	9894	9970	*0045	*0121	*0196	*0272	*0347	75
576	760422	0498	0573	0649	0724	0799	0875	0950	1025	1101	75
577	1176	1251	1326	1402	1477	1552	1627	1702	1778	1853	75
578	1928	2003	2078	2153	2228	2303	2378	2453	2529	2604	75
579	2679	2754	2829	2904	2978	3053	3128	3203	3278	3353	75
580	763428	3503	3578	3653	3727	3802	3877	3952	4027	4101	75
581	4176	4251	4326	4400	4475	4550	4624	4699	4774	4848	75
582	4923	4998	5072	5147	5221	5296	5370	5445	5520	5594	75
583	5669	5743	5818	5892	5966	6041	6115	6190	6264	6338	74
584	6413	6487	6562	6636	6710	6785	6859	6933	7007	7082	74
585	767156	7230	7304	7379	7453	7527	7601	7675	7749	7823	74
586	7898	7972	8046	8120	8194	8268	8342	8416	8490	8564	74
587	8638	8712	8786	8860	8934	9008	9082	9156	9230	9303	74
588	9377	9451	9525	9599	9673	9746	9820	9894	9968	*0042	74
589	770115	0189	0263	0336	0410	0484	0557	0631	0705	0778	74
590	770852	0926	0999	1073	1146	1220	1293	1367	1440	1514	74
591	1587	1661	1734	1808	1881	1955	2028	2102	2175	2248	73
592	2322	2395	2468	2542	2615	2688	2762	2835	2908	2981	73
593	3055	3128	3201	3274	3348	3421	3494	3567	3640	3713	73
594	3786	3860	3933	4006	4079	4152	4225	4298	4371	4444	73
595	774517	4590	4663	4736	4809	4882	4955	5028	5100	5173	73
596	5246	5319	5392	5465	5538	5610	5683	5756	5829	5902	73
597	5974	6047	6120	6193	6265	6338	6411	6483	6556	6629	73
598	6701	6774	6846	6919	6992	7064	7137	7209	7282	7354	73
599	7427	7499	7572	7644	7717	7789	7862	7934	8006	8079	72

N.	Diff.	1	2	3	4	5	6	7	8	9	Diff.
PRO. PARTS	78	8	16	23	31	39	47	55	62	70	78
	77	8	15	23	31	39	46	54	62	69	77
	76	8	15	23	30	38	46	53	61	68	76
	75	8	15	23	30	38	45	53	60	68	75
	74	7	15	22	30	37	44	52	59	67	74
	73	7	15	22	29	37	44	51	58	66	73
	72	7	14	22	29	36	43	50	58	65	72
	Diff.	1	2	3	4	5	6	7	8	9	Diff.

TABLE 54. — *Continued*

LOGARITHMS OF NUMBERS

N.	0	1	2	3	4	5	6	7	8	9	Diff.
600	778151	8224	8296	8368	8441	8513	8585	8658	8730	8802	72
601	8874	8947	9019	9091	9163	9236	9308	9380	9452	9524	72
602	9596	9669	9741	9813	9885	9957	*0029	*0101	*0173	*0245	72
603	780317	0389	0461	0533	0605	0677	0749	0821	0893	0965	72
604	1037	1109	1181	1253	1324	1396	1468	1540	1612	1684	72
605	781755	1827	1899	1971	2042	2114	2186	2258	2329	2401	72
606	2473	2544	2616	2688	2759	2831	2902	2974	3046	3117	72
607	3189	3260	3332	3403	3475	3546	3618	3689	3761	3832	71
608	3904	3975	4046	4118	4189	4261	4332	4403	4475	4546	71
609	4617	4689	4760	4831	4902	4974	5045	5116	5187	5259	71
610	785330	5401	5472	5543	5615	5686	5757	5828	5899	5970	71
611	6041	6112	6183	6254	6325	6396	6467	6538	6609	6680	71
612	6751	6822	6893	6964	7035	7106	7177	7248	7319	7390	71
613	7460	7531	7602	7673	7744	7815	7885	7956	8027	8098	71
614	8168	8239	8310	8381	8451	8522	8593	8663	8734	8804	71
615	788875	8946	9016	9087	9157	9228	9299	9369	9440	9510	71
616	9581	9651	9722	9792	9863	9933	*0004	*0074	*0144	*0215	70
617	790285	0356	0426	0496	0567	0637	0707	0778	0848	0918	70
618	0988	1059	1129	1199	1269	1340	1410	1480	1550	1620	70
619	1691	1761	1831	1901	1971	2041	2111	2181	2252	2322	70
620	792392	2462	2532	2602	2672	2742	2812	2882	2952	3022	70
621	3092	3162	3231	3301	3371	3441	3511	3581	3651	3721	70
622	3790	3860	3930	4000	4070	4139	4209	4279	4349	4418	70
623	4488	4558	4627	4697	4767	4836	4906	4976	5045	5115	70
624	5185	5254	5324	5393	5463	5532	5602	5672	5741	5811	70
625	795880	5949	6019	6088	6158	6227	6297	6366	6436	6505	69
626	6574	6644	6713	6782	6852	6921	6990	7060	7129	7198	69
627	7268	7337	7406	7475	7545	7614	7683	7752	7821	7890	69
628	7960	8029	8098	8167	8236	8305	8374	8443	8513	8582	69
629	8651	8720	8789	8858	8927	8996	9065	9134	9203	9272	69
630	799341	9409	9478	9547	9616	9685	9754	9823	9892	9961	69
631	800029	0098	0167	0236	0305	0373	0442	0511	0580	0648	69
632	0717	0786	0854	0923	0992	1061	1129	1198	1266	1335	69
633	1404	1472	1541	1609	1678	1747	1815	1884	1952	2021	69
634	2089	2158	2226	2295	2363	2432	2500	2568	2637	2705	68
635	802774	2842	2910	2979	3047	3116	3184	3252	3321	3389	68
636	3457	3525	3594	3662	3730	3798	3867	3935	4003	4071	68
637	4139	4208	4276	4344	4412	4480	4548	4616	4685	4753	68
638	4821	4889	4957	5025	5093	5161	5229	5297	5365	5433	68
639	5501	5569	5637	5705	5773	5841	5908	5976	6044	6112	68
640	806180	6248	6316	6384	6451	6519	6587	6655	6723	6790	68
641	6858	6926	6994	7061	7129	7197	7264	7332	7400	7467	68
642	7535	7603	7670	7738	7806	7873	7941	8008	8076	8143	68
643	8211	8279	8346	8414	8481	8549	8616	8684	8751	8818	67
644	8886	8953	9021	9088	9156	9223	9290	9358	9425	9492	67
645	809560	9627	9694	9762	9829	9896	9964	*0031	*0098	*0165	67
646	810233	0300	0367	0434	0501	0569	0636	0703	0770	0837	67
647	0904	0971	1039	1106	1173	1240	1307	1374	1441	1508	67
648	1575	1642	1709	1776	1843	1910	1977	2044	2111	2178	67
649	2245	2312	2379	2445	2512	2579	2646	2713	2780	2847	67

N.	Diff.	1	2	3	4	5	6	7	8	9	Diff.
PRO. P'TS	73	7	15	22	29	37	44	51	58	66	73
	72	7	14	22	29	36	43	50	58	65	72
	71	7	14	21	28	36	43	50	57	64	71
	70	7	14	21	28	35	42	49	56	63	70
	69	7	14	21	28	35	41	48	55	62	69
	68	7	14	20	27	34	41	48	54	61	68
	Diff.	1	2	3	4	5	6	7	8	9	Diff.

TABLE 54.—*Continued*

LOGARITHMS OF NUMBERS

N.	0	1	2	3	4	5	6	7	8	9	Diff.
650	812913	2980	3047	3114	3181	3247	3314	3381	3448	3514	67
651	3581	3648	3714	3781	3848	3914	3981	4048	4114	4181	67
652	4248	4314	4381	4447	4514	4581	4647	4714	4780	4847	67
653	4913	4980	5046	5113	5179	5246	5312	5378	5445	5511	66
654	5578	5644	5711	5777	5843	5910	5976	6042	6109	6175	66
655	816241	6308	6374	6440	6506	6573	6639	6705	6771	6838	66
656	6904	6970	7036	7102	7169	7235	7301	7367	7433	7499	66
657	7565	7631	7698	7764	7830	7896	7962	8028	8094	8160	66
658	8226	8292	8358	8424	8490	8556	8622	8688	8754	8820	66
659	8885	8951	9017	9083	9149	9215	9281	9346	9412	9478	66
660	819544	9610	9676	9741	9807	9873	9939	*0004	*0070	*0136	66
661	820201	0267	0333	0399	0464	0530	0595	0661	0727	0792	66
662	0858	0924	0989	1055	1120	1186	1251	1317	1382	1448	66
663	1514	1579	1645	1710	1775	1841	1906	1972	2037	2103	65
664	2168	2233	2299	2364	2430	2495	2560	2626	2691	2756	65
665	822822	2887	2952	3018	3083	3148	3213	3279	3344	3409	65
666	3474	3539	3605	3670	3735	3800	3865	3930	3996	4061	65
667	4126	4191	4256	4321	4386	4451	4516	4581	4646	4711	65
668	4776	4841	4906	4971	5036	5101	5166	5231	5296	5361	65
669	5426	5491	5556	5621	5686	5751	5815	5880	5945	6010	65
670	826075	6140	6204	6269	6334	6399	6464	6528	6593	6658	65
671	6723	6787	6852	6917	6981	7046	7111	7175	7240	7305	65
672	7369	7434	7499	7563	7628	7692	7757	7821	7886	7951	65
673	8015	8080	8144	8209	8273	8338	8402	8467	8531	8595	64
674	8660	8724	8789	8853	8918	8982	9046	9111	9175	9239	64
675	829304	9368	9432	9497	9561	9625	9690	9754	9818	9882	64
676	9947	*0011	*0075	*0139	*0204	*0268	*0332	*0396	*0460	*0525	64
677	830589	0653	0717	0781	0845	0909	0973	1037	1102	1166	64
678	1230	1294	1358	1422	1486	1550	1614	1678	1742	1806	64
679	1870	1934	1998	2062	2126	2189	2253	2317	2381	2445	64
680	832509	2573	2637	2700	2764	2828	2892	2956	3020	3083	64
681	3147	3211	3275	3338	3402	3466	3530	3593	3657	3721	64
682	3784	3848	3912	3975	4039	4103	4166	4230	4294	4357	64
683	4421	4484	4548	4611	4675	4739	4802	4866	4929	4993	64
684	5056	5120	5183	5247	5310	5373	5437	5500	5564	5627	63
685	835691	5754	5817	5881	5944	6007	6071	6134	6197	6261	63
686	6324	6387	6451	6514	6577	6641	6704	6767	6830	6894	63
687	6957	7020	7083	7146	7210	7273	7336	7399	7462	7525	63
688	7588	7652	7715	7778	7841	7904	7967	8030	8093	8156	63
689	8219	8282	8345	8408	8471	8534	8597	8660	8723	8786	63
690	838849	8912	8975	9038	9101	9164	9227	9289	9352	9415	63
691	9478	9541	9604	9667	9729	9792	9855	9918	9981	*0043	63
692	840106	0169	0232	0294	0357	0420	0482	0545	0608	0671	63
693	0733	0796	0859	0921	0984	1046	1109	1172	1234	1297	63
694	1359	1422	1485	1547	1610	1672	1735	1797	1860	1922	63
695	841985	2047	2110	2172	2235	2297	2360	2422	2484	2547	62
696	2609	2672	2734	2796	2859	2921	2983	3046	3108	3170	62
697	3233	3295	3357	3420	3482	3544	3606	3669	3731	3793	62
698	3855	3918	3980	4042	4104	4166	4229	4291	4353	4415	62
699	4477	4539	4601	4664	4726	4788	4850	4912	4974	5036	62
N.	Diff.	1	2	3	4	5	6	7	8	9	Diff.
PRO. P'TS	67	7	13	20	27	34	40	47	54	60	67
	66	7	13	20	26	33	40	46	53	59	66
	65	7	13	20	26	33	39	46	52	59	65
	64	6	13	19	26	32	38	45	51	58	64
	63	6	13	19	25	32	38	44	50	57	63
	62	6	12	19	25	31	37	43	50	56	62
	Diff.	1	2	3	4	5	6	7	8	9	Diff.

TABLE 54. — *Continued*

LOGARITHMS OF NUMBERS

N.	0	1	2	3	4	5	6	7	8	9	Diff.
700	845098	5160	5222	5284	5346	5408	5470	5532	5594	5656	62
701	5718	5780	5842	5904	5966	6028	6090	6151	6213	6275	62
702	6337	6399	6461	6523	6585	6646	6708	6770	6832	6894	62
703	6955	7017	7079	7141	7202	7264	7326	7388	7449	7511	62
704	7573	7634	7696	7758	7819	7881	7943	8004	8066	8128	62
705	848189	8251	8312	8374	8435	8497	8559	8620	8682	8743	62
706	8805	8866	8928	8989	9051	9112	9174	9235	9297	9358	61
707	9419	9481	9542	9604	9665	9726	9788	9849	9911	9972	61
708	850033	0095	0156	0217	0279	0340	0401	0462	0524	0585	61
709	0646	0707	0769	0830	0891	0952	1014	1075	1136	1197	61
710	851258	1320	1381	1442	1503	1564	1625	1686	1747	1809	61
711	1870	1931	1992	2053	2114	2175	2236	2297	2358	2419	61
712	2480	2541	2602	2663	2724	2785	2846	2907	2968	3029	61
713	3090	3150	3211	3272	3333	3394	3455	3516	3577	3637	61
714	3698	3759	3820	3881	3941	4002	4063	4124	4185	4245	61
715	854306	4367	4428	4488	4549	4610	4670	4731	4792	4852	61
716	4913	4974	5034	5095	5156	5216	5277	5337	5398	5459	61
717	5519	5580	5640	5701	5761	5822	5882	5943	6003	6064	61
718	6124	6185	6245	6306	6366	6427	6487	6548	6608	6668	60
719	6729	6789	6850	6910	6970	7031	7091	7152	7212	7272	60
720	857332	7393	7453	7513	7574	7634	7694	7755	7815	7875	60
721	7935	7995	8056	8116	8176	8236	8297	8357	8417	8477	60
722	8537	8597	8657	8718	8778	8838	8898	8958	9018	9078	60
723	9138	9198	9258	9318	9379	9439	9499	9559	9619	9679	60
724	9739	9799	9859	9918	9978	*0038	*0098	*0158	*0218	*0278	60
725	860338	0398	0458	0518	0578	0637	0697	0757	0817	0877	60
726	0937	0996	1056	1116	1176	1236	1295	1355	1415	1475	60
727	1534	1594	1654	1714	1773	1833	1893	1952	2012	2072	60
728	2131	2191	2251	2310	2370	2430	2489	2549	2608	2668	60
729	2728	2787	2847	2906	2966	3025	3085	3144	3204	3263	60
730	863323	3382	3442	3501	3561	3620	3680	3739	3799	3858	59
731	3917	3977	4036	4096	4155	4214	4274	4333	4392	4452	59
732	4511	4570	4630	4689	4748	4808	4867	4926	4985	5045	59
733	5104	5163	5222	5282	5341	5400	5459	5519	5578	5637	59
734	5696	5755	5814	5874	5933	5992	6051	6110	6169	6228	59
735	866287	6346	6405	6465	6524	6583	6642	6701	6760	6819	59
736	6878	6937	6996	7055	7114	7173	7232	7291	7350	7409	59
737	7467	7526	7585	7644	7703	7762	7821	7880	7939	7998	59
738	8056	8115	8174	8233	8292	8350	8409	8468	8527	8586	59
739	8644	8703	8762	8821	8879	8938	8997	9056	9114	9173	59
740	869232	9290	9349	9408	9466	9525	9584	9642	9701	9760	59
741	9818	9877	9935	9994	*0053	*0111	*0170	*0228	*0287	*0345	59
742	870404	0462	0521	0579	0638	0696	0755	0813	0872	0930	58
743	0989	1047	1106	1164	1223	1281	1339	1398	1456	1515	58
744	1573	1631	1690	1748	1806	1865	1923	1981	2040	2098	58
745	872156	2215	2273	2331	2389	2448	2506	2564	2622	2681	58
746	2739	2797	2855	2913	2972	3030	3088	3146	3204	3262	58
747	3321	3379	3437	3495	3553	3611	3669	3727	3785	3844	58
748	3902	3960	4018	4076	4134	4192	4250	4308	4366	4424	58
749	4482	4540	4598	4656	4714	4772	4830	4888	4945	5003	58
N.	Diff.	1	2	3	4	5	6	7	8	9	Diff.
PRO. P'TS	62	6	12	19	25	31	37	43	50	56	62
	61	6	12	18	24	31	37	43	49	55	61
	60	6	12	18	24	30	36	42	48	54	60
	59	6	12	18	24	30	35	41	47	53	59
	58	6	12	17	23	29	35	41	46	52	58
	Diff.	1	2	3	4	5	6	7	8	9	Diff.

TABLE 54. — *Continued*

LOGARITHMS OF NUMBERS

N.	0	1	2	3	4	5	6	7	8	9	Diff.
750	875061	5119	5177	5235	5293	5351	5409	5466	5524	5582	58
751	5640	5698	5756	5813	5871	5929	5987	6045	6102	6160	58
752	6218	6276	6333	6391	6449	6507	6564	6622	6680	6737	58
753	6795	6853	6910	6968	7026	7083	7141	7199	7256	7314	58
754	7371	7429	7487	7544	7602	7659	7717	7774	7832	7889	58
755	877947	8004	8062	8119	8177	8234	8292	8349	8407	8464	57
756	8522	8579	8637	8694	8752	8809	8866	8924	8981	9039	57
757	9096	9153	9211	9268	9325	9383	9440	9497	9555	9612	57
758	9669	9726	9784	9841	9898	9956	*0013	*0070	*0127	*0185	57
759	880242	0299	0356	0413	0471	0528	0585	0642	0699	0756	57
760	880814	0871	0928	0985	1042	1099	1156	1213	1271	1328	57
761	1385	1442	1499	1556	1613	1670	1727	1784	1841	1898	57
762	1955	2012	2069	2126	2183	2240	2297	2354	2411	2468	57
763	2525	2581	2638	2695	2752	2809	2866	2923	2980	3037	57
764	3093	3150	3207	3264	3321	3377	3434	3491	3548	3605	57
765	883661	3718	3775	3832	3888	3945	4002	4059	4115	4172	57
766	4229	4285	4342	4399	4455	4512	4569	4625	4682	4739	57
767	4795	4852	4909	4965	5022	5078	5135	5192	5248	5305	57
768	5361	5418	5474	5531	5587	5644	5700	5757	5813	5870	57
769	5926	5983	6039	6096	6152	6209	6265	6321	6378	6434	56
770	886491	6547	6604	6660	6716	6773	6829	6885	6942	6998	56
771	7054	7111	7167	7223	7280	7336	7392	7449	7505	7561	56
772	7617	7674	7730	7786	7842	7898	7955	8011	8067	8123	56
773	8179	8236	8292	8348	8404	8460	8516	8573	8629	8685	56
774	8741	8797	8853	8909	8965	9021	9077	9134	9190	9246	56
775	889302	9358	9414	9470	9526	9582	9638	9694	9750	9806	56
776	9862	9918	9974	*0030	*0086	*0141	*0197	*0253	*0309	*0365	56
777	890421	0477	0533	0589	0645	0700	0756	0812	0868	0924	56
778	0980	1035	1091	1147	1203	1259	1314	1370	1426	1482	56
779	1537	1593	1649	1705	1760	1816	1872	1928	1983	2039	56
780	892095	2150	2206	2262	2317	2373	2429	2484	2540	2595	56
781	2651	2707	2762	2818	2873	2929	2985	3040	3096	3151	56
782	3207	3262	3318	3373	3429	3484	3540	3595	3651	3706	56
783	3762	3817	3873	3928	3984	4039	4094	4150	4205	4261	55
784	4316	4371	4427	4482	4538	4593	4648	4704	4759	4814	55
785	894870	4925	4980	5036	5091	5146	5201	5257	5312	5367	55
786	5423	5478	5533	5588	5644	5699	5754	5809	5864	5920	55
787	5975	6030	6085	6140	6195	6251	6306	6361	6416	6471	55
788	6526	6581	6636	6692	6747	6802	6857	6912	6967	7022	55
789	7077	7132	7187	7242	7297	7352	7407	7462	7517	7572	55
790	897627	7682	7737	7792	7847	7902	7957	8012	8067	8122	55
791	8176	8231	8286	8341	8396	8451	8506	8561	8615	8670	55
792	8725	8780	8835	8890	8944	8999	9054	9109	9164	9218	55
793	9273	9328	9383	9437	9492	9547	9602	9656	9711	9766	55
794	9821	9875	9930	9985	*0039	*0094	*0149	*0203	*0258	*0312	55
795	900367	0422	0476	0531	0586	0640	0695	0749	0804	0859	55
796	0913	0968	1022	1077	1131	1186	1240	1295	1349	1404	55
797	1458	1513	1567	1622	1676	1731	1785	1840	1894	1948	54
798	2003	2057	2112	2166	2221	2275	2329	2384	2438	2492	54
799	2547	2601	2655	2710	2764	2818	2873	2927	2981	3036	54
N.	Diff.	1	2	3	4	5	6	7	8	9	Diff.
PR. PTS.	57	6	11	17	23	29	34	40	46	51	57
	56	6	11	17	22	28	34	39	45	50	56
	55	6	11	17	22	28	33	39	44	50	55
	54	5	11	16	22	27	32	38	43	49	54
	Diff.	1	2	3	4	5	6	7	8	9	Diff.

TABLE 54. — *Continued*

LOGARITHMS OF NUMBERS

N.	0	1	2	3	4	5	6	7	8	9	Diff.
800	903090	3144	3199	3253	3307	3361	3416	3470	3524	3578	54
801	3633	3687	3741	3795	3849	3904	3958	4012	4066	4120	54
802	4174	4229	4283	4337	4391	4445	4499	4553	4607	4661	54
803	4716	4770	4824	4878	4932	4986	5040	5094	5148	5202	54
804	5256	5310	5364	5418	5472	5526	5580	5634	5688	5742	54
805	905796	5850	5904	5958	6012	6066	6119	6173	6227	6281	54
806	6335	6389	6443	6497	6551	6604	6658	6712	6766	6820	54
807	6874	6927	6981	7035	7089	7143	7196	7250	7304	7358	54
808	7411	7465	7519	7573	7626	7680	7734	7787	7841	7895	54
809	7949	8002	8056	8110	8163	8217	8270	8324	8378	8431	54
810	908485	8539	8592	8646	8699	8753	8807	8860	8914	8967	54
811	9021	9074	9128	9181	9235	9289	9342	9396	9449	9503	54
812	9556	9610	9663	9716	9770	9823	9877	9930	9984	*0037	53
813	910091	0144	0197	0251	0304	0358	0411	0464	0518	0571	53
814	0624	0678	0731	0784	0838	0891	0944	0998	1051	1104	53
815	911158	1211	1264	1317	1371	1424	1477	1530	1584	1637	53
816	1690	1743	1797	1850	1903	1956	2009	2063	2116	2169	53
817	2222	2275	2328	2381	2435	2488	2541	2594	2647	2700	53
818	2753	2806	2859	2913	2966	3019	3072	3125	3178	3231	53
819	3284	3337	3390	3443	3496	3549	3602	3655	3708	3761	53
820	913814	3867	3920	3973	4026	4079	4132	4184	4237	4290	53
821	4343	4396	4449	4502	4555	4608	4660	4713	4766	4819	53
822	4872	4925	4977	5030	5083	5136	5189	5241	5294	5347	53
823	5400	5453	5505	5558	5611	5664	5716	5769	5822	5875	53
824	5927	5980	6033	6085	6138	6191	6243	6296	6349	6401	53
825	916454	6507	6559	6612	6664	6717	6770	6822	6875	6927	53
826	6980	7033	7085	7138	7190	7243	7295	7348	7400	7453	53
827	7506	7558	7611	7663	7716	7768	7820	7873	7925	7978	52
828	8030	8083	8135	8188	8240	8293	8345	8397	8450	8502	52
829	8555	8607	8659	8712	8764	8816	8869	8921	8973	9026	52
830	919078	9130	9183	9235	9287	9340	9392	9444	9496	9549	52
831	9601	9653	9706	9758	9810	9862	9914	9967	*0019	*0071	52
832	920123	0176	0228	0280	0332	0384	0436	0489	0541	0593	52
833	0645	0697	0749	0801	0853	0906	0958	1010	1062	1114	52
834	1166	1218	1270	1322	1374	1426	1478	1530	1582	1634	52
835	921686	1738	1790	1842	1894	1946	1998	2050	2102	2154	52
836	2206	2258	2310	2362	2414	2466	2518	2570	2622	2674	52
837	2725	2777	2829	2881	2933	2985	3037	3089	3140	3192	52
838	3244	3296	3348	3399	3451	3503	3555	3607	3658	3710	52
839	3762	3814	3865	3917	3969	4021	4072	4124	4176	4228	52
840	924279	4331	4383	4434	4486	4538	4589	4641	4693	4744	52
841	4796	4848	4899	4951	5003	5054	5106	5157	5209	5261	52
842	5312	5364	5415	5467	5518	5570	5621	5673	5725	5776	52
843	5828	5879	5931	5982	6034	6085	6137	6188	6240	6291	51
844	6342	6394	6445	6497	6548	6600	6651	6702	6754	6805	51
845	926857	6908	6959	7011	7062	7114	7165	7216	7268	7319	51
846	7370	7422	7473	7524	7576	7627	7678	7730	7781	7832	51
847	7883	7935	7986	8037	8088	8140	8191	8242	8293	8345	51
848	8396	8447	8498	8549	8601	8652	8703	8754	8805	8857	51
849	8908	8959	9010	9061	9112	9163	9215	9266	9317	9368	51
N.	Diff.	1	2	3	4	5	6	7	8	9	Diff.
PR. PTS.	55	6	11	17	22	28	33	39	44	50	55
	54	5	11	16	22	27	32	38	43	49	54
	53	5	11	16	21	27	32	37	42	48	53
	52	5	10	16	21	26	31	36	42	47	52
	Diff.	1	2	3	4	5	6	7	8	9	Diff.

TABLE 54.—*Continued*

LOGARITHMS OF NUMBERS

N.	0	1	2	3	4	5	6	7	8	9	Diff.
850	929419	9470	9521	9572	9623	9674	9725	9776	9827	9879	51
851	9930	9981	*0032	*0083	*0134	*0185	*0236	*0287	*0338	*0389	51
852	930440	0491	0542	0592	0643	0694	0745	0796	0847	0898	51
853	0949	1000	1051	1102	1153	1204	1254	1305	1356	1407	51
854	1458	1509	1560	1610	1661	1712	1763	1814	1865	1915	51
855	931966	2017	2068	2118	2169	2220	2271	2322	2372	2423	51
856	2474	2524	2575	2626	2677	2727	2778	2829	2879	2930	51
857	2981	3031	3082	3133	3183	3234	3285	3335	3386	3437	51
858	3487	3538	3589	3639	3690	3740	3791	3841	3892	3943	51
859	3993	4044	4094	4145	4195	4246	4296	4347	4397	4448	51
860	934498	4549	4599	4650	4700	4751	4801	4852	4902	4953	50
861	5003	5054	5104	5154	5205	5255	5306	5356	5406	5457	50
862	5507	5558	5608	5658	5709	5759	5809	5860	5910	5960	50
863	6011	6061	6111	6162	6212	6262	6313	6363	6413	6463	50
864	6514	6564	6614	6665	6715	6765	6815	6865	6916	6966	50
865	937016	7066	7117	7167	7217	7267	7317	7367	7418	7468	50
866	7518	7568	7618	7668	7718	7769	7819	7869	7919	7969	50
867	8019	8069	8119	8169	8219	8269	8320	8370	8420	8470	50
868	8520	8570	8620	8670	8720	8770	8820	8870	8920	8970	50
869	9020	9070	9120	9170	9220	9270	9320	9369	9419	9469	50
870	939519	9569	9619	9669	9719	9769	9819	9869	9918	9968	50
871	940018	0068	0118	0168	0218	0267	0317	0367	0417	0467	50
872	0516	0566	0616	0666	0716	0765	0815	0865	0915	0964	50
873	1014	1064	1114	1163	1213	1263	1313	1362	1412	1462	50
874	1511	1561	1611	1660	1710	1760	1809	1859	1909	1958	50
875	942008	2058	2107	2157	2207	2256	2306	2355	2405	2455	50
876	2504	2554	2603	2653	2702	2752	2801	2851	2901	2950	50
877	3000	3049	3099	3148	3198	3247	3297	3346	3396	3445	49
878	3495	3544	3593	3643	3692	3742	3791	3841	3890	3939	49
879	3989	4038	4088	4137	4186	4236	4285	4335	4384	4433	49
880	944483	4532	4581	4631	4680	4729	4779	4828	4877	4927	49
881	4976	5025	5074	5124	5173	5222	5272	5321	5370	5419	49
882	5469	5518	5567	5616	5665	5715	5764	5813	5862	5912	49
883	5961	6010	6059	6108	6157	6207	6256	6305	6354	6403	49
884	6452	6501	6551	6600	6649	6698	6747	6796	6845	6894	49
885	946943	6992	7041	7090	7140	7189	7238	7287	7336	7385	49
886	7434	7483	7532	7581	7630	7679	7728	7777	7826	7875	49
887	7924	7973	8022	8070	8119	8168	8217	8266	8315	8364	49
888	8413	8462	8511	8560	8609	8657	8706	8755	8804	8853	49
889	8902	8951	8999	9048	9097	9146	9195	9244	9292	9341	49
890	949390	9439	9488	9536	9585	9634	9683	9731	9780	9829	49
891	9878	9926	9975	*0024	*0073	*0121	*0170	*0219	*0267	*0316	49
892	950365	0414	0462	0511	0560	0608	0657	0706	0754	0803	49
893	0851	0900	0949	0997	1046	1095	1143	1192	1240	1289	49
894	1338	1386	1435	1483	1532	1580	1629	1677	1726	1775	49
895	951823	1872	1920	1969	2017	2066	2114	2163	2211	2260	48
896	2308	2356	2405	2453	2502	2550	2599	2647	2696	2744	48
897	2792	2841	2889	2938	2986	3034	3083	3131	3180	3228	48
898	3276	3325	3373	3421	3470	3518	3566	3615	3663	3711	48
899	3760	3808	3856	3905	3953	4001	4049	4098	4146	4194	48

N.	Diff.	1	2	3	4	5	6	7	8	9	Diff.
PR. PTS.	51	5	10	15	20	26	31	36	41	46	51
	50	5	10	15	20	25	30	35	40	45	50
	49	5	10	15	20	25	29	34	39	44	49
	48	5	10	14	19	24	29	34	38	43	48
	Diff.	1	2	3	4	5	6	7	8	9	Diff.

TABLE 54.—*Continued*

LOGARITHMS OF NUMBERS

N.	0	1	2	3	4	5	6	7	8	9	Diff.
900	954243	4291	4339	4387	4435	4484	4532	4580	4628	4677	48
901	4725	4773	4821	4869	4918	4966	5014	5062	5110	5158	48
902	5207	5255	5303	5351	5399	5447	5495	5543	5592	5640	48
903	5688	5736	5784	5832	5880	5928	5976	6024	6072	6120	48
904	6168	6216	6265	6313	6361	6409	6457	6505	6553	6601	48
905	956649	6697	6745	6793	6840	6888	6936	6984	7032	7080	48
906	7128	7176	7224	7272	7320	7368	7416	7464	7512	7559	48
907	7607	7655	7703	7751	7799	7847	7894	7942	7990	8038	48
908	8086	8134	8181	8229	8277	8325	8373	8421	8468	8516	48
909	8564	8612	8659	8707	8755	8803	8850	8898	8946	8994	48
910	959041	9089	9137	9185	9232	9280	9328	9375	9423	9471	48
911	9518	9566	9614	9661	9709	9757	9804	9852	9900	9947	48
912	9995	*0042	*0090	*0138	*0185	*0233	*0280	*0328	*0376	*0423	48
913	960471	0518	0566	0613	0661	0709	0756	0804	0851	0899	48
914	0946	0994	1041	1089	1136	1184	1231	1279	1326	1374	48
915	961421	1469	1516	1563	1611	1658	1706	1753	1801	1848	47
916	1895	1943	1990	2038	2085	2132	2180	2227	2275	2322	47
917	2369	2417	2464	2511	2559	2606	2653	2701	2748	2795	47
918	2843	2890	2937	2985	3032	3079	3126	3174	3221	3268	47
919	3316	3363	3410	3457	3504	3552	3599	3646	3693	3741	47
920	963788	3835	3882	3929	3977	4024	4071	4118	4165	4212	47
921	4260	4307	4354	4401	4448	4495	4542	4590	4637	4684	47
922	4731	4778	4825	4872	4919	4966	5013	5061	5108	5155	47
923	5202	5249	5296	5343	5390	5437	5484	5531	5578	5625	47
924	5672	5719	5766	5813	5860	5907	5954	6001	6048	6095	47
925	966142	6189	6236	6283	6329	6376	6423	6470	6517	6564	47
926	6611	6658	6705	6752	6799	6845	6892	6939	6986	7033	47
927	7080	7127	7173	7220	7267	7314	7361	7408	7454	7501	47
928	7548	7595	7642	7688	7735	7782	7829	7875	7922	7969	47
929	8016	8062	8109	8156	8203	8249	8296	8343	8390	8436	47
930	968483	8530	8576	8623	8670	8716	8763	8810	8856	8903	47
931	8950	8996	9043	9090	9136	9183	9229	9276	9323	9369	47
932	9416	9463	9509	9556	9602	9649	9695	9742	9789	9835	47
933	9882	9928	9975	*0021	*0068	*0114	*0161	*0207	*0254	*0300	47
934	970347	0393	0440	0486	0533	0579	0626	0672	0719	0765	46
935	970812	0858	0904	0951	0997	1044	1090	1137	1183	1229	46
936	1276	1322	1369	1415	1461	1508	1554	1601	1647	1693	46
937	1740	1786	1832	1879	1925	1971	2018	2064	2110	2157	46
938	2203	2249	2295	2342	2388	2434	2481	2527	2573	2619	46
939	2666	2712	2758	2804	2851	2897	2943	2989	3035	3082	46
940	973128	3174	3220	3266	3313	3359	3405	3451	3497	3543	46
941	3590	3636	3682	3728	3774	3820	3866	3913	3959	4005	46
942	4051	4097	4143	4189	4235	4281	4327	4374	4420	4466	46
943	4512	4558	4604	4650	4696	4742	4788	4834	4880	4926	46
944	4972	5018	5064	5110	5156	5202	5248	5294	5340	5386	46
945	975432	5478	5524	5570	5616	5662	5707	5753	5799	5845	46
946	5891	5937	5983	6029	6075	6121	6167	6212	6258	6304	46
947	6350	6396	6442	6488	6533	6579	6625	6671	6717	6763	46
948	6808	6854	6900	6946	6992	7037	7083	7129	7175	7220	46
949	7266	7312	7358	7403	7449	7495	7541	7586	7632	7678	46

N.	Diff.	1	2	3	4	5	6	7	8	9	Diff.
PR. PTS.	49	5	10	15	20	25	29	34	39	44	49
	48	5	10	14	19	24	29	34	38	43	48
	47	5	9	14	19	24	28	33	38	42	47
	46	5	9	14	18	23	28	32	37	41	46
	Diff.	1	2	3	4	5	6	7	8	9	Diff.

TABLE 54. — *Continued*

LOGARITHMS OF NUMBERS

N.	0	1	2	3	4	5	6	7	8	9	Diff.
950	977724	7769	7815	7861	7906	7952	7998	8043	8089	8135	46
951	8181	8226	8272	8317	8363	8409	8454	8500	8546	8591	46
952	8637	8683	8728	8774	8819	8865	8911	8956	9002	9047	46
953	9093	9138	9184	9230	9275	9321	9366	9412	9457	9503	46
954	9548	9594	9639	9685	9730	9776	9821	9867	9912	9958	46
955	980003	0049	0094	0140	0185	0231	0276	0322	0367	0412	45
956	0458	0503	0549	0594	0640	0685	0730	0776	0821	0867	45
957	0912	0957	1003	1048	1093	1139	1184	1229	1275	1320	45
958	1366	1411	1456	1501	1547	1592	1637	1683	1728	1773	45
959	1819	1864	1909	1954	2000	2045	2090	2135	2181	2226	45
960	982271	2316	2362	2407	2452	2497	2543	2588	2633	2678	45
961	2723	2769	2814	2859	2904	2949	2994	3040	3085	3130	45
962	3175	3220	3265	3310	3356	3401	3446	3491	3536	3581	45
963	3626	3671	3716	3762	3807	3852	3897	3942	3987	4032	45
964	4077	4122	4167	4212	4257	4302	4347	4392	4437	4482	45
965	984527	4572	4617	4662	4707	4752	4797	4842	4887	4932	45
966	4977	5022	5067	5112	5157	5202	5247	5292	5337	5382	45
967	5426	5471	5516	5561	5606	5651	5696	5741	5786	5830	45
968	5875	5920	5965	6010	6055	6100	6144	6189	6234	6279	45
969	6324	6369	6413	6458	6503	6548	6593	6637	6682	6727	45
970	986772	6817	6861	6906	6951	6996	7040	7085	7130	7175	45
971	7219	7264	7309	7353	7398	7443	7488	7532	7577	7622	45
972	7666	7711	7756	7800	7845	7890	7934	7979	8024	8068	45
973	8113	8157	8202	8247	8291	8336	8381	8425	8470	8514	45
974	8559	8604	8648	8693	8737	8782	8826	8871	8916	8960	45
975	989005	9049	9094	9138	9183	9227	9272	9316	9361	9405	45
976	9450	9494	9539	9583	9628	9672	9717	9761	9806	9850	44
977	9895	9939	9983	*0028	*0072	*0117	*0161	*0206	*0250	*0294	44
978	990339	0383	0428	0472	0516	0561	0605	0650	0694	0738	44
979	0783	0827	0871	0916	0960	1004	1049	1093	1137	1182	44
980	991226	1270	1315	1359	1403	1448	1492	1536	1580	1625	44
981	1669	1713	1758	1802	1846	1890	1935	1979	2023	2067	44
982	2111	2156	2200	2244	2288	2333	2377	2421	2465	2509	44
983	2554	2598	2642	2686	2730	2774	2819	2863	2907	2951	44
984	2995	3039	3083	3127	3172	3216	3260	3304	3348	3392	44
985	993436	3480	3524	3568	3613	3657	3701	3745	3789	3833	44
986	3877	3921	3965	4009	4053	4097	4141	4185	4229	4273	44
987	4317	4361	4405	4449	4493	4537	4581	4625	4669	4713	44
988	4757	4801	4845	4889	4933	4977	5021	5065	5108	5152	44
989	5196	5240	5284	5328	5372	5416	5460	5504	5547	5591	44
990	995635	5679	5723	5767	5811	5854	5898	5942	5986	6030	44
991	6074	6117	6161	6205	6249	6293	6337	6380	6424	6468	44
992	6512	6555	6599	6643	6687	6731	6774	6818	6862	6906	44
993	6949	6993	7037	7080	7124	7168	7212	7255	7299	7343	44
994	7386	7430	7474	7517	7561	7605	7648	7692	7736	7779	44
995	997823	7867	7910	7954	7998	8041	8085	8129	8172	8216	44
996	8259	8303	8347	8390	8434	8477	8521	8564	8608	8652	44
997	8695	8739	8782	8826	8869	8913	8956	9000	9043	9087	44
998	9131	9174	9218	9261	9305	9348	9392	9435	9479	9522	44
999	9565	9609	9652	9696	9739	9783	9826	9870	9913	9957	43

N.	Diff.	1	2	3	4	5	6	7	8	9	Diff.
PR. PTS.	46	5	9	14	18	23	28	32	37	41	46
	45	5	9	14	18	23	27	32	36	41	45
	44	4	9	13	18	22	26	31	35	40	44
	43	4	9	13	17	22	26	30	34	39	43
	Diff.	1	2	3	4	5	6	7	8	9	Diff.

TABLE 54. — *Continued*

LOGARITHMS OF NUMBERS

N.	0	1	2	3	4	5	6	7	8	9	Diff.
1000	000000	0043	0087	0130	0174	0217	0260	0304	0347	0391	43
1001	0434	0477	0521	0564	0608	0651	0694	0738	0781	0824	43
1002	0868	0911	0954	0998	1041	1084	1128	1171	1214	1258	43
1003	1301	1344	1388	1431	1474	1517	1561	1604	1647	1690	43
1004	1734	1777	1820	1863	1907	1950	1993	2036	2080	2123	43
1005	002166	2209	2252	2296	2339	2382	2425	2468	2512	2555	43
1006	2598	2641	2684	2727	2771	2814	2857	2900	2943	2986	43
1007	3029	3073	3116	3159	3202	3245	3288	3331	3374	3417	43
1008	3461	3504	3547	3590	3633	3676	3719	3762	3805	3848	43
1009	3891	3934	3977	4020	4063	4106	4149	4192	4235	4278	43
1010	004321	4364	4407	4450	4493	4536	4579	4622	4665	4708	43
1011	4751	4794	4837	4880	4923	4966	5009	5052	5095	5138	43
1012	5181	5223	5266	5309	5352	5395	5438	5481	5524	5567	43
1013	5609	5652	5695	5738	5781	5824	5867	5909	5952	5995	43
1014	6038	6081	6124	6166	6209	6252	6295	6338	6380	6423	43
1015	006466	6509	6552	6594	6637	6680	6723	6765	6808	6851	43
1016	6894	6936	6979	7022	7065	7107	7150	7193	7236	7278	43
1017	7321	7364	7406	7449	7492	7534	7577	7620	7662	7705	43
1018	7748	7790	7833	7876	7918	7961	8004	8046	8089	8132	43
1019	8174	8217	8259	8302	8345	8387	8430	8472	8515	8558	43
1020	008600	8643	8685	8728	8770	8813	8856	8898	8941	8983	43
1021	9026	9068	9111	9153	9196	9238	9281	9323	9366	9408	42
1022	9451	9493	9536	9578	9621	9663	9706	9748	9791	9833	42
1023	9876	9918	9961	*0003	*0045	*0088	*0130	*0173	*0215	*0258	42
1024	010300	0342	0385	0427	0470	0512	0554	0597	0639	0681	42
1025	010724	0766	0809	0851	0893	0936	0978	1020	1063	1105	42
1026	1147	1190	1232	1274	1317	1359	1401	1444	1486	1528	42
1027	1570	1613	1655	1697	1740	1782	1824	1866	1909	1951	42
1028	1993	2035	2078	2120	2162	2204	2247	2289	2331	2373	42
1029	2415	2458	2500	2542	2584	2626	2669	2711	2753	2795	42
1030	012837	2879	2922	2964	3006	3048	3090	3132	3174	3217	42
1031	3259	3301	3343	3385	3427	3469	3511	3553	3596	3638	42
1032	3680	3722	3764	3806	3848	3890	3932	3974	4016	4058	42
1033	4100	4142	4184	4226	4268	4310	4353	4395	4437	4479	42
1034	4521	4563	4605	4647	4689	4730	4772	4814	4856	4898	42
1035	014940	4982	5024	5066	5108	5150	5192	5234	5276	5318	42
1036	5360	5402	5444	5485	5527	5569	5611	5653	5695	5737	42
1037	5779	5821	5863	5904	5946	5988	6030	6072	6114	6156	42
1038	6197	6239	6281	6323	6365	6407	6448	6490	6532	6574	42
1039	6616	6657	6699	6741	6783	6824	6866	6908	6950	6992	42
1040	017033	7075	7117	7159	7200	7242	7284	7326	7367	7409	42
1041	7451	7492	7534	7576	7618	7659	7701	7743	7784	7826	42
1042	7868	7909	7951	7993	8034	8076	8118	8159	8201	8243	42
1043	8284	8326	8368	8409	8451	8492	8534	8576	8617	8659	42
1044	8700	8742	8784	8825	8867	8908	8950	8992	9033	9075	42
1045	019116	9158	9199	9241	9282	9324	9366	9407	9449	9490	42
1046	9532	9573	9615	9656	9698	9739	9781	9822	9864	9905	41
1047	9947	9988	*0030	*0071	*0113	*0154	*0195	*0237	*0278	*0320	41
1048	020361	0403	0444	0486	0527	0568	0610	0651	0693	0734	41
1049	0775	0817	0858	0900	0941	0982	1024	1065	1107	1148	41
1050	021189	1231	1272	1313	1355	1396	1437	1479	1520	1561	41

N.	Diff.	1	2	3	4	5	6	7	8	9	Diff.
PR. PTS.	44	4	9	13	18	22	26	31	35	40	44
	43	4	9	13	17	22	26	30	34	39	43
	42	4	8	13	17	21	25	29	34	38	42
	41	4	8	12	16	21	25	29	33	37	41
	Diff.	1	2	3	4	5	6	7	8	9	Diff.

TABLE 55

LOGARITHMIC SINES, COSINES, TANGENTS, AND COTANGENTS

0° 179°

M.	Sin.	D. 1″.	Cos.	D. 1″.	Tan.	D. 1″.	Cot.	
0	—∞		10.000000		—∞		—∞	60
1	6.463726	5017.17	.000000	.00	6.463726	5017.17	3.536274	59
2	.764756	2934.85	.000000	.00	.764756	2934.85	.235244	58
3	.940847	2082.32	.000000	.00	.940847	2082.32	.059153	57
4	7.065786	1615.17	.000000	.00	7.065786	1615.17	2.934214	56
5	7.162696	1319.68	10.000000	.02	7.162696	1319.70	2.837304	55
6	.241877	1115.78	9.999999	.00	.241878	1115.78	.758122	54
7	.308824	966.53	.999999	.00	.308825	966.53	.691175	53
8	.366816	852.53	.999999	.00	.366817	852.55	.633183	52
9	.417968	762.63	.999999	.02	.417970	762.62	.582030	51
10	7.463726	689.87	9.999998	.00	7.463727	689.88	2.536273	50
11	.505118	629.80	.999998	.02	.505120	629.82	.494880	49
12	.542906	579.37	.999997	.00	.542909	579.38	.457091	48
13	.577668	536.42	.999997	.02	.577672	536.42	.422328	47
14	.609853	499.38	.999996	.00	.609857	499.38	.390143	46
15	7.639816	467.15	9.999996	.02	7.639820	467.15	2.360180	45
16	.667845	438.80	.999995	.00	.667849	438.83	.332151	44
17	.694173	413.73	.999995	.02	.694179	413.73	.305821	43
18	.718997	391.35	.999994	.02	.719003	391.35	.280997	42
19	.742478	371.27	.999993	.00	.742484	371.28	.257516	41
20	7.764754	353.15	9.999993	.02	7.764761	353.17	2.235239	40
21	.785943	336.72	.999992	.02	.785951	336.73	.214049	39
22	.806146	321.75	.999991	.02	.806155	321.75	.193845	38
23	.825451	308.05	.999990	.02	.825460	308.07	.174540	37
24	.843934	295.47	.999989	.00	.843944	295.50	.156056	36
25	7.861662	283.88	9.999989	.02	7.861674	283.90	2.138326	35
26	.878695	273.17	.999988	.02	.878708	273.18	.121292	34
27	.895085	263.23	.999987	.02	.895099	263.25	.104901	33
28	.910879	254.00	.999986	.02	.910894	254.00	.089106	32
29	.926119	245.38	.999985	.03	.926134	245.40	.073866	31
30	7.940842	237.33	9.999983	.02	7.940858	237.37	2.059142	30
31	.955082	229.80	.999982	.02	.955100	229.82	.044900	29
32	.968870	222.72	.999981	.02	.968889	222.73	.031111	28
33	.982233	216.08	.999980	.02	.982253	216.10	.017747	27
34	.995198	209.82	.999979	.03	.995219	209.83	.004781	26
35	8.007787	203.90	9.999977	.02	8.007809	203.92	1.992191	25
36	.020021	198.30	.999976	.02	.020044	198.35	.979956	24
37	.031919	193.03	.999975	.03	.031945	193.03	.968055	23
38	.043501	188.00	.999973	.02	.043527	188.03	.956473	22
39	.054781	183.25	.999972	.02	.054809	183.28	.945191	21
40	8.065776	178.73	9.999971	.03	8.065806	178.75	1.934194	20
41	.076500	174.42	.999969	.02	.076531	174.43	.923469	19
42	.086965	170.30	.999968	.03	.086997	170.33	.913003	18
43	.097183	166.40	.999966	.03	.097217	166.43	.902783	17
44	.107167	162.65	.999964	.02	.107203	162.67	.892797	16
45	8.116926	159.08	9.999963	.03	8.116963	159.12	1.883037	15
46	.126471	155.65	.999961	.03	.126510	155.68	.873490	14
47	.135810	152.38	.999959	.02	.135851	152.42	.864149	13
48	.144953	149.23	.999958	.03	.144996	149.27	.855004	12
49	.153907	146.23	.999956	.03	.153952	146.25	.846048	11
50	8.162681	143.32	9.999954	.03	8.162727	143.35	1.837273	10
51	.171280	140.55	.999952	.03	.171328	140.58	.828672	9
52	.179713	137.87	.999950	.03	.179763	137.88	.820237	8
53	.187985	135.28	.999948	.03	.188036	135.33	.811964	7
54	.196102	132.80	.999946	.03	.196156	132.83	.803844	6
55	8.204070	130.42	9.999944	.03	8.204126	130.45	1.795874	5
56	.211895	128.10	.999942	.03	.211953	128.13	.788047	4
57	.219581	125.88	.999940	.03	.219641	125.90	.780359	3
58	.227134	123.72	.999938	.03	.227195	123.77	.772805	2
59	.234557	121.63	.999936	.03	.234621	121.67	.765379	1
60	8.241855		9.999934		8.241921		1.758079	0
	Cos.	D. 1″.	Sin.	D. 1″.	Cot.	D. 1″.	Tan.	M.

89°

TABLE 55. — *Continued*

LOGARITHMIC SINES, COSINES, TANGENTS, AND COTANGENTS

1° 178°

M.	Sin.	D. 1″.	Cos.	D. 1″.	Tan.	D. 1″.	Cot.	
0	8.241855	119.63	9.999934	.03	8.241921	119.68	1.758079	60
1	.249033	117.68	.999932	.05	.249102	117.72	.750898	59
2	.256094	115.80	.999929	.03	.256165	115.83	.743835	58
3	.263042	113.98	.999927	.03	.263115	114.02	.736885	57
4	.269881	112.22	.999925	.05	.269956	112.25	.730044	56
5	8.276614	110.48	9.999922	.03	8.276691	110.53	1.723309	55
6	.283243	108.83	.999920	.03	.283323	108.88	.716677	54
7	.289773	107.23	.999918	.05	.289856	107.27	.710144	53
8	.296207	105.65	.999915	.03	.296292	105.70	.703708	52
9	.302546	104.13	.999913	.05	.302634	104.17	.697366	51
10	8.308794	102.67	9.999910	.05	8.308884	102.70	1.691116	50
11	.314954	101.22	.999907	.03	.315046	101.27	.684954	49
12	.321027	99.82	.999905	.05	.321122	99.87	.678878	48
13	.327016	98.47	.999902	.05	.327114	98.52	.672886	47
14	.332924	97.15	.999899	.03	.333025	97.18	.666975	46
15	8.338753	95.85	9.999897	.05	8.338856	95.90	1.661144	45
16	.344504	94.62	.999894	.05	.344610	94.65	.655390	44
17	.350181	93.37	.999891	.05	.350289	93.43	.649711	43
18	.355783	92.20	.999888	.05	.355895	92.25	.644105	42
19	.361315	91.03	.999885	.05	.361430	91.08	.638570	41
20	8.366777	89.90	9.999882	.05	8.366895	89.95	1.633105	40
21	.372171	88.80	.999879	.05	.372292	88.83	.627708	39
22	.377499	87.72	.999876	.05	.377622	87.78	.622378	38
23	.382762	86.67	.999873	.05	.382889	86.72	.617111	37
24	.387962	85.65	.999870	.05	.388092	85.70	.611908	36
25	8.393101	84.63	9.999867	.05	8.393234	84.68	1.606766	35
26	.398179	83.67	.999864	.05	.398315	83.72	.601685	34
27	.403199	82.70	.999861	.05	.403338	82.77	.596662	33
28	.408161	81.78	.999858	.07	.408304	81.82	.591696	32
29	.413068	80.85	.999854	.05	.413213	80.92	.586787	31
30	8.417919	79.97	9.999851	.05	8.418068	80.02	1.581932	30
31	.422717	79.08	.999848	.07	.422869	79.15	.577131	29
32	.427462	78.23	.999844	.05	.427618	78.28	.572382	28
33	.432156	77.40	.999841	.05	.432315	77.45	.567685	27
34	.436800	76.57	.999838	.07	.436962	76.63	.563038	26
35	8.441394	75.78	9.999834	.05	8.441560	75.83	1.558440	25
36	.445941	74.98	.999831	.07	.446110	75.05	.553890	24
37	.450440	74.22	.999827	.05	.450613	74.28	.549387	23
38	.454893	73.47	.999824	.07	.455070	73.52	.544930	22
39	.459301	72.73	.999820	.07	.459481	72.80	.540519	21
40	8.463665	72.00	9.999816	.05	8.463849	72.05	1.536151	20
41	.467985	71.30	.999813	.07	.468172	71.37	.531828	19
42	.472263	70.58	.999809	.07	.472454	70.65	.527546	18
43	.476498	69.92	.999805	.07	.476693	69.98	.523307	17
44	.480693	69.25	.999801	.07	.480892	69.30	.519108	16
45	8.484848	68.58	9.999797	.05	8.485050	68.67	1.514950	15
46	.488963	67.95	.999794	.07	.489170	68.00	.510830	14
47	.493040	67.30	.999790	.07	.493250	67.38	.506750	13
48	.497078	66.70	.999786	.07	.497293	66.75	.502707	12
49	.501080	66.08	.999782	.07	.501298	66.15	.498702	11
50	8.505045	65.48	9.999778	.07	8.505267	65.55	1.494733	10
51	.508974	64.88	.999774	.08	.509200	64.97	.490800	9
52	.512867	64.32	.999769	.07	.513098	64.38	.486902	8
53	.516726	63.75	.999765	.07	.516961	63.82	.483039	7
54	.520551	63.20	.999761	.07	.520790	63.27	.479210	6
55	8.524343	62.65	9.999757	.07	8.524586	62.72	1.475414	5
56	.528102	62.10	.999753	.08	.528349	62.18	.471651	4
57	.531828	61.58	.999748	.07	.532080	61.65	.467920	3
58	.535523	61.05	.999744	.07	.535779	61.13	.464221	2
59	.539186	60.55	.999740	.08	.539447	60.62	.460553	1
60	8.542819		9.999735		8.543084		1.456916	0
	Cos.	D. 1″.	Sin.	D. 1″.	Cot.	D. 1″.	Tan.	M.

91° 8

TABLE 55. — *Continued*

LOGARITHMIC SINES, COSINES, TANGENTS, AND COTANGENTS

2° 177°

M.	Sin.	D. 1″.	Cos.	D. 1″.	Tan.	D. 1″.	Cot.	
0	8.542819	60.05	9.999735	.07	8.543084	60.12	1.456916	60
1	.546422	59.55	.999731	.08	.546691	59.62	.453309	59
2	.549995	59.07	.999726	.07	.550268	59.15	.449732	58
3	.553539	58.58	.999722	.08	.553817	58.65	.446183	57
4	.557054	58.10	.999717	.07	.557336	58.20	.442664	56
5	8.560540	57.65	9.999713	.08	8.560828	57.72	1.439172	55
6	.563999	57.20	.999708	.07	.564291	57.27	.435709	54
7	.567431	56.75	.999704	.08	.567727	56.83	.432273	53
8	.570836	56.30	.999699	.08	.571137	56.38	.428863	52
9	.574214	55.87	.999694	.08	.574520	55.95	.425480	51
10	8.577566	55.43	9.999689	.07	8.577877	55.52	1.422123	50
11	.580892	55.02	.999685	.08	.581208	55.10	.418792	49
12	.584193	54.60	.999680	.08	.584514	54.68	.415486	48
13	.587469	54.20	.999675	.08	.587795	54.27	.412205	47
14	.590721	53.78	.999670	.08	.591051	53.87	.408949	46
15	8.593948	53.40	9.999665	.08	8.594283	53.48	1.405717	45
16	.597152	53.00	.999660	.08	.597492	53.08	.402508	44
17	.600332	52.62	.999655	.08	.600677	52.70	.399323	43
18	.603489	52.23	.999650	.08	.603839	52.32	.396161	42
19	.606623	51.85	.999645	.08	.606978	51.93	.393022	41
20	8.609734	51.48	9.999640	.08	8.610094	51.58	1.389906	40
21	.612823	51.13	.999635	.10	.613189	51.22	.386811	39
22	.615891	50.77	.999629	.08	.616262	50.85	.383738	38
23	.618937	50.42	.999624	.08	.619313	50.50	.380687	37
24	.621962	50.05	.999619	.08	.622343	50.15	.377657	36
25	8.624965	49.72	9.999614	.10	8.625352	49.80	1.374648	35
26	.627948	49.38	.999608	.08	.628340	49.47	.371660	34
27	.630911	49.05	.999603	.10	.631308	49.13	.368692	33
28	.633854	48.70	.999597	.08	.634256	48.80	.365744	32
29	.636776	48.40	.999592	.10	.637184	48.48	.362816	31
30	8.639680	48.05	9.999586	.08	8.640093	48.15	1.359907	30
31	.642563	47.75	.999581	.10	.642982	47.85	.357018	29
32	.645428	47.43	.999575	.08	.645853	47.52	.354147	28
33	.648274	47.13	.999570	.10	.648704	47.22	.351296	27
34	.651102	46.82	.999564	.10	.651537	46.92	.348463	26
35	8.653911	46.52	9.999558	.08	8.654352	46.62	1.345648	25
36	.656702	46.22	.999553	.10	.657149	46.32	.342851	24
37	.659475	45.92	.999547	.10	.659928	46.02	.340072	23
38	.662230	45.63	.999541	.10	.662689	45.73	.337311	22
39	.664968	45.35	.999535	.10	.665433	45.45	.334567	21
40	8.667689	45.07	9.999529	.08	8.668160	45.17	1.331840	20
41	.670393	44.78	.999524	.10	.670870	44.88	.329130	19
42	.673080	44.52	.999518	.10	.673563	44.60	.326437	18
43	.675751	44.23	.999512	.10	.676239	44.35	.323761	17
44	.678405	43.97	.999506	.10	.678900	44.07	.321100	16
45	8.681043	43.70	9.999500	.12	8.681544	43.80	1.318456	15
46	.683665	43.45	.999493	.10	.684172	43.53	.315828	14
47	.686272	43.18	.999487	.10	.686784	43.28	.313216	13
48	.688863	42.92	.999481	.10	.689381	43.03	.310619	12
49	.691438	42.67	.999475	.10	.691963	42.77	.308037	11
50	8.693998	42.42	9.999469	.10	8.694529	42.53	1.305471	10
51	.696543	42.17	.999463	.12	.697081	42.27	.302919	9
52	.699073	41.93	.999456	.10	.699617	42.03	.300383	8
53	.701589	41.68	.999450	.12	.702139	41.78	.297861	7
54	.704090	41.45	.999443	.10	.704646	41.57	.295354	6
55	8.706577	41.20	9.999437	.10	8.707140	41.30	1.292860	5
56	.709049	40.97	.999431	.12	.709618	41.08	.290382	4
57	.711507	40.75	.999424	.10	.712083	40.85	.287917	3
58	.713952	40.52	.999418	.12	.714534	40.63	.285466	2
59	.716383	40.28	.999411	.12	.716972	40.40	.283028	1
60	8.718800		9.999404		8.719396		1.280604	0
	Cos.	D. 1″.	Sin.	D. 1″.	Cot.	D. 1″.	Tan.	M.

87°

LOGARITHMIC SINES, COSINES, TANGENTS, AND COTANGENTS

3° 176'

M.	Sin.	D. 1″.	Cos.	D. 1″.	Tan.	D. 1″.	Cot.	
0	8.718800	40.07	9.999404	.10	8.719396	40.17	1.280604	60
1	.721204	39.85	.999398	.12	.721806	39.97	.278194	59
2	.723595	39.62	.999391	.12	.724204	39.73	.275796	58
3	.725972	39.42	.999384	.10	.726588	39.52	.273412	57
4	.728337	39.18	.999378	.12	.728959	39.30	.271041	56
5	8.730688	38.98	9.999371	.12	8.731317	39.10	1.268683	55
6	.733027	38.78	.999364	.12	.733663	38.88	.266337	54
7	.735354	38.55	.999357	.12	.735996	38.68	.264004	53
8	.737667	38.37	.999350	.12	.738317	38.48	.261683	52
9	.739969	38.17	.999343	.12	.740626	38.27	.259374	51
10	8.742259	37.95	9.999336	.12	8.742922	38.08	1.257078	50
11	.744536	37.77	.999329	.12	.745207	37.87	.254793	49
12	.746802	37.55	.999322	.12	.747479	37.68	.252521	48
13	.749055	37.37	.999315	.12	.749740	37.48	.250260	47
14	.751297	37.18	.999308	.12	.751989	37.30	.248011	46
15	8.753528	36.98	9.999301	.12	8.754227	37.10	1.245773	45
16	.755747	36.80	.999294	.12	.756453	36.92	.243547	44
17	.757955	36.60	.999287	.13	.758668	36.73	.241332	43
18	.760151	36.43	.999279	.12	.760872	36.55	.239128	42
19	.762337	36.23	.999272	.12	.763065	36.35	.236935	41
20	8.764511	36.07	9.999265	.13	8.765246	36.18	1.234754	40
21	.766675	35.88	.999257	.12	.767417	36.02	.232583	39
22	.768828	35.70	.999250	.13	.769578	35.82	.230422	38
23	.770970	35.52	.999242	.12	.771727	35.65	.228273	37
24	.773101	35.37	.999235	.13	.773866	35.48	.226134	36
25	8.775223	35.17	9.999227	.12	8.775995	35.32	1.224005	35
26	.777333	35.02	.999220	.13	.778114	35.13	.221886	34
27	.779434	34.83	.999212	.12	.780222	34.97	.219778	33
28	.781524	34.68	.999205	.13	.782320	34.80	.217680	32
29	.783605	34.50	.999197	.13	.784408	34.63	.215592	31
30	8.785675	34.35	9.999189	.13	8.786486	34.47	1.213514	30
31	.787736	34.18	.999181	.12	.788554	34.32	.211446	29
32	.789787	34.02	.999174	.13	.790613	34.15	.209387	28
33	.791828	33.85	.999166	.13	.792662	33.98	.207338	27
34	.793859	33.70	.999158	.13	.794701	33.83	.205299	26
35	8.795881	33.55	9.999150	.13	8.796731	33.68	1.203269	25
36	.797894	33.38	.999142	.13	.798752	33.52	.201248	24
37	.799897	33.25	.999134	.13	.800763	33.37	.199237	23
38	.801892	33.07	.999126	.13	.802765	33.22	.197235	22
39	.803876	32.93	.999118	.13	.804758	33.07	.195242	21
40	8.805852	32.78	9.999110	.13	8.806742	32.92	1.193258	20
41	.807819	32.63	.999102	.13	.808717	32.77	.191283	19
42	.809777	32.48	.999094	.13	.810683	32.63	.189317	18
43	.811726	32.35	.999086	.15	.812641	32.47	.187359	17
44	.813667	32.20	.999077	.13	.814589	32.33	.185411	16
45	8.815599	32.05	9.999069	.13	8.816529	32.20	1.183471	15
46	.817522	31.90	.999061	.13	.818461	32.05	.181539	14
47	.819436	31.78	.999053	.15	.820384	31.90	.179616	13
48	.821343	31.62	.999044	.13	.822298	31.78	.177702	12
49	.823240	31.50	.999036	.15	.824205	31.63	.175795	11
50	8.825130	31.35	9.999027	.13	8.826103	31.48	1.173897	10
51	.827011	31.22	.999019	.15	.827992	31.37	.172008	9
52	.828884	31.08	.999010	.13	.829874	31.23	.170126	8
53	.830749	30.97	.999002	.15	.831748	31.08	.168252	7
54	.832607	30.82	.998993	.15	.833613	30.97	.166387	6
55	8.834456	30.68	9.998984	.13	8.835471	30.83	1.164529	5
56	.836297	30.55	.998976	.15	.837321	30.70	.162679	4
57	.838130	30.43	.998967	.15	.839163	30.58	.160837	3
58	.839956	30.30	.998958	.13	.840998	30.45	.159002	2
59	.841774	30.18	.998950	.15	.842825	30.32	.157175	1
60	8.843585		9.998941		8.844644		1.155356	0
	Cos.	D. 1″.	Sin.	D. 1″.	Cot.	D. 1″.	Tan.	M.

TABLE 55. — *Continued*

LOGARITHMIC SINES, COSINES, TANGENTS, AND COTANGENTS

4° 175°

M.	Sin.	D. 1″.	Cos.	D. 1″.	Tan.	D. 1″.	Cot.	
0	8.843585	30.03	9.998941	.15	8.844644	30.18	1.155356	60
1	.845387	29.93	.998932	.15	.846455	30.08	.153545	59
2	.847183	29.80	.998923	.15	.848260	29.95	.151740	58
3	.848971	29.67	.998914	.15	.850057	29.82	.149943	57
4	.850751	29.57	.998905	.15	.851846	29.70	.148154	56
5	8.852525	29.43	9.998896	.15	8.853628	29.58	1.146372	55
6	.854291	29.30	.998887	.15	.855403	29.47	.144597	54
7	.856049	29.20	.998878	.15	.857171	29.35	.142829	53
8	.857801	29.08	.998869	.15	.858932	29.23	.141068	52
9	.859546	28.95	.998860	.15	.860686	29.12	.139314	51
10	8.861283	28.85	9.998851	.17	8.862433	29.00	1.137567	50
11	.863014	28.73	.998841	.15	.864173	28.88	.135827	49
12	.864738	28.62	.998832	.15	.865906	28.77	.134094	48
13	.866455	28.50	.998823	.15	.867632	28.65	.132368	47
14	.868165	28.38	.998813	.17	.869351	28.55	.130649	46
15	8.869868	28.28	9.998804	.15	8.871064	28.43	1.128936	45
16	.871565	28.17	.998795	.15	.872770	28.32	.127230	44
17	.873255	28.05	.998785	.17	.874469	28.22	.125531	43
18	.874938	27.95	.998776	.15	.876162	28.12	.123838	42
19	.876615	27.83	.998766	.17	.877849	28.00	.122151	41
20	8.878285	27.73	9.998757	.15	8.879529	27.88	1.120471	40
21	.879949	27.63	.998747	.15	.881202	27.78	.118798	39
22	.881607	27.52	.998738	.17	.882869	27.68	.117131	38
23	.883258	27.42	.998728	.17	.884530	27.58	.115470	37
24	.884903	27.32	.998718	.17	.886185	27.47	.113815	36
25	8.886542	27.20	9.998708	.15	8.887833	27.38	1.112167	35
26	.888174	27.12	.998699	.17	.889476	27.27	.110524	34
27	.889801	27.00	.998689	.17	.891112	27.17	.108888	33
28	.891421	26.90	.998679	.17	.892742	27.07	.107258	32
29	.893035	26.80	.998669	.17	.894366	26.97	.105634	31
30	8.894643	26.72	9.998659	.17	8.895984	26.87	1.104016	30
31	.896246	26.60	.998649	.17	.897596	26.78	.102404	29
32	.897842	26.50	.998639	.17	.899203	26.67	.100797	28
33	.899432	26.42	.998629	.17	.900803	26.58	.099197	27
34	.901017	26.32	.998619	.17	.902398	26.48	.097602	26
35	8.902596	26.22	9.998609	.17	8.903987	26.38	1.096013	25
36	.904169	26.12	.998599	.17	.905570	26.28	.094430	24
37	.905736	26.02	.998589	.18	.907147	26.20	.092853	23
38	.907297	25.93	.998578	.17	.908719	26.10	.091281	22
39	.908853	25.85	.998568	.17	.910285	26.02	.089715	21
40	8.910404	25.75	9.998558	.17	8.911846	25.92	1.088154	20
41	.911949	25.65	.998548	.18	.913401	25.83	.086599	19
42	.913488	25.57	.998537	.17	.914951	25.73	.085049	18
43	.915022	25.47	.998527	.18	.916495	25.65	.083505	17
44	.916550	25.38	.998516	.17	.918034	25.57	.081966	16
45	8.918073	25.30	9.998506	.18	8.919568	25.47	1.080432	15
46	.919591	25.20	.998495	.17	.921096	25.38	.078904	14
47	.921103	25.12	.998485	.18	.922619	25.28	.077381	13
48	.922610	25.03	.998474	.17	.924136	25.22	.075864	12
49	.924112	24.95	.998464	.18	.925649	25.12	.074351	11
50	8.925609	24.85	9.998453	.18	8.927156	25.03	1.072844	10
51	.927100	24.78	.998442	.18	.928658	24.95	.071342	9
52	.928587	24.68	.998431	.17	.930155	24.87	.069845	8
53	.930068	24.60	.998421	.18	.931647	24.78	.068353	7
54	.931544	24.52	.998410	.18	.933134	24.70	.066866	6
55	8.933015	24.43	9.998399	.18	8.934616	24.62	1.065384	5
56	.934481	24.35	.998388	.18	.936093	24.53	.063907	4
57	.935942	24.27	.998377	.18	.937565	24.45	.062435	3
58	.937398	24.20	.998366	.18	.939032	24.37	.060968	2
59	.938850	24.10	.998355	.18	.940494	24.30	.059506	1
60	8.940296		9.998344		8.941952		1.058048	0
	Cos.	D. 1″.	Sin.	D. 1″.	Cot.	D. 1″.	Tan.	M.

94° 85°

TABLE 55. — *Continued*

LOGARITHMIC SINES, COSINES, TANGENTS, AND COTANGENTS

174°

′.	Sin.	D. 1″.	Cos.	D. 1″.	Tan.	D. 1″.	Cot.	
0	8.940296	24.03	9.998344	.18	8.941952	24.20	1.058048	60
1	.941738	23.93	.998333	.18	.943404	24.13	.056596	59
2	.943174	23.87	.998322	.18	.944852	24.05	.055148	58
3	.944606	23.80	.998311	.18	.946295	23.98	.053705	57
4	.946034	23.70	.998300	.18	.947734	23.90	.052266	56
5	8.947456	23.63	9.998289	.20	8.949168	23.82	1.050832	55
6	.948874	23.55	.998277	.18	.950597	23.73	.049403	54
7	.950287	23.48	.998266	.18	.952021	23.67	.047979	53
8	.951696	23.40	.998255	.20	.953441	23.58	.046559	52
9	.953100	23.32	.998243	.18	.954856	23.52	.045144	51
10	8.954499	23.25	9.998232	.20	8.956267	23.45	1.043733	50
11	.955894	23.17	.998220	.18	.957674	23.35	.042326	49
12	.957284	23.10	.998209	.20	.959075	23.30	.040925	48
13	.958670	23.03	.998197	.18	.960473	23.22	.039527	47
14	.960052	22.95	.998186	.20	.961866	23.15	.038134	46
15	8.961429	22.87	9.998174	.18	8.963255	23.07	1.036745	45
16	.962801	22.82	.998163	.20	.964639	23.00	.035361	44
17	.964170	22.73	.998151	.20	.966019	22.92	.033981	43
18	.965534	22.65	.998139	.18	.967394	22.87	.032606	42
19	.966893	22.60	.998128	.20	.968766	22.78	.031234	41
20	8.968249	22.52	9.998116	.20	8.970133	22.72	1.029867	40
21	.969600	22.45	.998104	.20	.971496	22.65	.028504	39
22	.970947	22.37	.998092	.20	.972855	22.57	.027145	38
23	.972289	22.32	.998080	.20	.974209	22.52	.025791	37
24	.973628	22.23	.998068	.20	.975560	22.43	.024440	36
25	8.974962	22.18	9.998056	.20	8.976906	22.37	1.023094	35
26	.976293	22.10	.998044	.20	.978248	22.30	.021752	34
27	.977619	22.03	.998032	.20	.979586	22.25	.020414	33
28	.978941	21.97	.998020	.20	.980921	22.17	.019079	32
29	.980259	21.90	.998008	.20	.982251	22.10	.017749	31
30	8.981573	21.83	9.997996	.20	8.983577	22.03	1.016423	30
31	.982883	21.77	.997984	.20	.984899	21.97	.015101	29
32	.984189	21.70	.997972	.22	.986217	21.92	.013783	28
33	.985491	21.63	.997959	.20	.987532	21.83	.012468	27
34	.986789	21.57	.997947	.20	.988842	21.78	.011158	26
35	8.988083	21.52	9.997935	.22	8.990149	21.70	1.009851	25
36	.989374	21.43	.997922	.20	.991451	21.65	.008549	24
37	.990660	21.38	.997910	.22	.992750	21.58	.007250	23
38	.991943	21.32	.997897	.20	.994045	21.53	.005955	22
39	.993222	21.25	.997885	.22	.995337	21.45	.004663	21
40	8.994497	21.18	9.997872	.20	8.996624	21.40	1.003376	20
41	.995768	21.13	.997860	.22	.997908	21.33	.002092	19
42	.997036	21.05	.997847	.20	.999188	21.28	.000812	18
43	.998299	21.02	.997835	.22	9.000465	21.22	0.999535	17
44	.999560	20.93	.997822	.22	.001738	21.15	.998262	16
45	9.000816	20.88	9.997809	.20	9.003007	21.08	0.996993	15
46	.002069	20.82	.997797	.22	.004272	21.03	.995728	14
47	.003318	20.75	.997784	.22	.005534	20.97	.994466	13
48	.004563	20.70	.997771	.22	.006792	20.92	.993208	12
49	.005805	20.65	.997758	.22	.008047	20.85	.991953	11
50	9.007044	20.57	9.997745	.22	9.009298	20.80	0.990702	10
51	.008278	20.53	.997732	.22	.010546	20.73	.989454	9
52	.009510	20.45	.997719	.22	.011790	20.68	.988210	8
53	.010737	20.42	.997706	.22	.013031	20.62	.986969	7
54	.011962	20.33	.997693	.22	.014268	20.57	.985732	6
55	9.013182	20.30	9.997680	.22	9.015502	20.50	0.984498	5
56	.014400	20.22	.997667	.22	.016732	20.45	.983268	4
57	.015613	20.18	.997654	.22	.017959	20.40	.982041	3
58	.016824	20.12	.997641	.22	.019183	20.33	.980817	2
59	.018031	20.07	.997628	.23	.020403	20.28	.979597	1
60	9.019235		9.997614		9.021620		0.978380	0
	Cos.	D. 1″.	Sin.	D. 1″.	Cot.	D. 1″.	Tan.	M.

84°

TABLE 55. — *Continued*

LOGARITHMIC SINES, COSINES, TANGENTS, AND COTANGENTS

6° 173°

M.	Sin.	D. 1″.	Cos.	D. 1″.	Tan.	D. 1″.	Cot.	
0	9.019235	20.00	9.997614	.22	9.021620	20.23	0.978380	60
1	.020435	19.95	.997601	.22	.022834	20.17	.977166	59
2	.021632	19.88	.997588	.23	.024044	20.12	.975956	58
3	.022825	19.85	.997574	.22	.025251	20.07	.974749	57
4	.024016	19.78	.997561	.23	.026455	20.00	.973545	56
5	9.025203	19.72	9.997547	.22	9.027655	19.95	0.972345	55
6	.026386	19.68	.997534	.23	.028852	19.90	.971148	54
7	.027567	19.62	.997520	.22	.030046	19.85	.969954	53
8	.028744	19.57	.997507	.23	.031237	19.80	.968763	52
9	.029918	19.52	.997493	.22	.032425	19.73	.967575	51
10	9.031089	19.47	9.997480	.23	9.033609	19.70	0.966391	50
11	.032257	19.40	.997466	.23	.034791	19.63	.965209	49
12	.033421	19.35	.997452	.22	.035969	19.58	.964031	48
13	.034582	19.32	.997439	.23	.037144	19.53	.962856	47
14	.035741	19.25	.997425	.23	.038316	19.48	.961684	46
15	9.036896	19.20	9.997411	.23	9.039485	19.43	0.960515	45
16	.038048	19.15	.997397	.23	.040651	19.37	.959349	44
17	.039197	19.08	.997383	.23	.041813	19.33	.958187	43
18	.040342	19.05	.997369	.23	.042973	19.28	.957027	42
19	.041485	19.00	.997355	.23	.044130	19.23	.955870	41
20	9.042625	18.95	9.997341	.23	9.045284	19.17	0.954716	40
21	.043762	18.88	.997327	.23	.046434	19.13	.953566	39
22	.044895	18.85	.997313	.23	.047582	19.08	.952418	38
23	.046026	18.80	.997299	.23	.048727	19.03	.951273	37
24	.047154	18.75	.997285	.23	.049869	18.98	.950131	36
25	9.048279	18.68	9.997271	.23	9.051008	18.93	0.948992	35
26	.049400	18.65	.997257	.25	.052144	18.88	.947856	34
27	.050519	18.60	.997242	.23	.053277	18.83	.946723	33
28	.051635	18.57	.997228	.23	.054407	18.80	.945593	32
29	.052749	18.50	.997214	.25	.055535	18.73	.944465	31
30	9.053859	18.45	9.997199	.23	9.056659	18.70	0.943341	30
31	.054966	18.42	.997185	.25	.057781	18.65	.942219	29
32	.056071	18.35	.997170	.23	.058900	18.60	.941100	28
33	.057172	18.32	.997156	.25	.060016	18.57	.939984	27
34	.058271	18.27	.997141	.23	.061130	18.50	.938870	26
35	9.059367	18.22	9.997127	.25	9.062240	18.47	0.937760	25
36	.060460	18.18	.997112	.23	.063348	18.42	.936652	24
37	.061551	18.13	.997098	.25	.064453	18.38	.935547	23
38	.062639	18.08	.997083	.25	.065556	18.32	.934444	22
39	.063724	18.03	.997068	.25	.066655	18.28	.933345	21
40	9.064806	17.98	9.997053	.23	9.067752	18.23	0.932248	20
41	.065885	17.95	.997039	.25	.068846	18.20	.931154	19
42	.066962	17.90	.997024	.25	.069938	18.15	.930062	18
43	.068036	17.85	.997009	.25	.071027	18.10	.928973	17
44	.069107	17.82	.996994	.25	.072113	18.07	.927887	16
45	9.070176	17.77	9.996979	.25	9.073197	18.02	0.926803	15
46	.071242	17.73	.996964	.25	.074278	17.97	.925722	14
47	.072306	17.67	.996949	.25	.075356	17.93	.924644	13
48	.073365	17.63	.996934	.25	.076432	17.88	.923568	12
49	.074424	17.60	.996919	.25	.077505	17.85	.922495	11
50	9.075480	17.55	9.996904	.25	9.078576	17.80	0.921424	10
51	.076533	17.50	.996889	.25	.079644	17.77	.920356	9
52	.077583	17.47	.996874	.27	.080710	17.72	.919290	8
53	.078631	17.42	.996858	.25	.081773	17.67	.918227	7
54	.079676	17.38	.996843	.25	.082833	17.63	.917167	6
55	9.080719	17.33	9.996828	.27	9.083891	17.60	0.916109	5
56	.081759	17.30	.996812	.25	.084947	17.55	.915053	4
57	.082797	17.25	.996797	.25	.086000	17.50	.914000	3
58	.083832	17.20	.996782	.27	.087050	17.47	.912950	2
59	.084864	17.17	.996766	.25	.088098	17.43	.911902	1
60	9.085894		9.996751		9.089144		0.910856	0
	Cos.	D. 1″.	Sin.	D. 1″.	Cot.	D. 1″.	Tan.	M.

96° 83°

LOGARITHMIC SINES, COSINES, TANGENTS, AND COTANGENTS

7° 17

M.	Sin.	D. 1″.	Cos.	D. 1″.	Tan.	D. 1″.	Cot.	
0	9.085894	17.13	9.996751	.27	9.089144	17.38	0.910856	60
1	.086922	17.08	.996735	.25	.090187	17.35	.909813	59
2	.087947	17.05	.996720	.27	.091228	17.30	.908772	58
3	.088970	17.00	.996704	.27	.092266	17.27	.907734	57
4	.089990	16.97	.996688	.25	.093302	17.23	.906698	56
5	9.091008	16.93	9.996673	.27	9.094336	17.18	0.905664	55
6	.092024	16.88	.996657	.27	.095367	17.13	.904633	54
7	.093037	16.83	.996641	.27	.096395	17.12	.903605	53
8	.094047	16.82	.996625	.25	.097422	17.07	.902578	52
9	.095056	16.77	.996610	.27	.098446	17.03	.901554	51
10	9.096062	16.72	9.996594	.27	9.099468	16.98	0.900532	50
11	.097065	16.68	.996578	.27	.100487	16.95	.899513	49
12	.098066	16.65	.996562	.27	.101504	16.92	.898496	48
13	.099065	16.62	.996546	.27	.102519	16.88	.897481	47
14	.100062	16.57	.996530	.27	.103532	16.83	.896468	46
15	9.101056	16.53	9.996514	.27	9.104542	16.80	0.895458	45
16	.102048	16.48	.996498	.27	.105550	16.77	.894450	44
17	.103037	16.47	.996482	.28	.106556	16.72	.893444	43
18	.104025	16.42	.996465	.27	.107559	16.68	.892441	42
19	.105010	16.37	.996449	.27	.108560	16.65	.891440	41
20	9.105992	16.35	9.996433	.27	9.109559	16.62	0.890441	40
21	.106973	16.30	.996417	.28	.110556	16.58	.889444	39
22	.107951	16.27	.996400	.27	.111551	16.53	.888449	38
23	.108927	16.23	.996384	.27	.112543	16.50	.887457	37
24	.109901	16.20	.996368	.28	.113533	16.47	.886467	36
25	9.110873	16.15	9.996351	.27	9.114521	16.43	0.885479	35
26	.111842	16.12	.996335	.28	.115507	16.40	.884493	34
27	.112809	16.08	.996318	.27	.116491	16.35	.883509	33
28	.113774	16.05	.996302	.28	.117472	16.33	.882528	32
29	.114737	16.02	.996285	.27	.118452	16.28	.881548	31
30	9.115698	15.97	9.996269	.28	9.119429	16.25	0.880571	30
31	.116656	15.95	.996252	.28	.120404	16.22	.879596	29
32	.117613	15.90	.996235	.27	.121377	16.18	.878623	28
33	.118567	15.87	.996219	.28	.122348	16.15	.877652	27
34	.119519	15.83	.996202	.28	.123317	16.12	.876683	26
35	9.120469	15.80	9.996185	.28	9.124284	16.08	0.875716	25
36	.121417	15.75	.996168	.28	.125249	16.03	.874751	24
37	.122362	15.73	.996151	.28	.126211	16.02	.873789	23
38	.123306	15.70	.996134	.28	.127172	15.97	.872828	22
39	.124248	15.65	.996117	.28	.128130	15.95	.871870	21
40	9.125187	15.63	9.996100	.28	9.129087	15.90	0.870913	20
41	.126125	15.58	.996083	.28	.130041	15.88	.869959	19
42	.127060	15.55	.996066	.28	.130994	15.83	.869006	18
43	.127993	15.53	.996049	.28	.131944	15.82	.868056	17
44	.128925	15.48	.996032	.28	.132893	15.77	.867107	16
45	9.129854	15.45	9.996015	.28	9.133839	15.75	0.866161	15
46	.130781	15.42	.995998	.30	.134784	15.70	.865216	14
47	.131706	15.40	.995980	.28	.135726	15.68	.864274	13
48	.132630	15.35	.995963	.28	.136667	15.63	.863333	12
49	.133551	15.32	.995946	.30	.137605	15.62	.862395	11
50	9.134470	15.28	9.995928	.28	9.138542	15.57	0.861458	10
51	.135387	15.27	.995911	.28	.139476	15.55	.860524	9
52	.136303	15.22	.995894	.30	.140409	15.52	.859591	8
53	.137216	15.20	.995876	.28	.141340	15.48	.858660	7
54	.138128	15.15	.995859	.30	.142269	15.45	.857731	6
55	9.139037	15.12	9.995841	.30	9.143196	15.42	0.856804	5
56	.139944	15.10	.995823	.28	.144121	15.38	.855879	4
57	.140850	15.07	.995806	.30	.145044	15.37	.854956	3
58	.141754	15.02	.995788	.28	.145966	15.32	.854034	2
59	.142655	15.00	.995771	.30	.146885	15.30	.853115	1
60	9.143555		9.995753		9.147803		0.852197	
	Cos.	D. 1″.	Sin.	D. 1″.	Cot.	D. 1″.	Tan.	

°97

TABLE 55. — *Continued*

LOGARITHMIC SINES, COSINES, TANGENTS, AND COTANGENTS

8° 171°

M.	Sin.	D. 1″.	Cos.	D. 1″.	Tan.	D. 1″.	Cot.	
0	9.143555	14.97	9.995753	.30	9.147803	15.25	0.852197	60
1	.144453	14.93	.995735	.30	.148718	15.23	.851282	59
2	.145349	14.90	.995717	.30	.149632	15.20	.850368	58
3	.146243	14.88	.995699	.30	.150544	15.17	.849456	57
4	.147136	14.83	.995681	.28	.151454	15.15	.848546	56
5	9.148026	14.82	9.995664	.30	9.152363	15.10	0.847637	55
6	.148915	14.78	.995646	.30	.153269	15.08	.846731	54
7	.149802	14.73	.995628	.30	.154174	15.05	.845826	53
8	.150686	14.72	.995610	.32	.155077	15.02	.844923	52
9	.151569	14.70	.995591	.30	.155978	14.98	.844022	51
10	9.152451	14.65	9.995573	.30	9.156877	14.97	0.843123	50
11	.153330	14.63	.995555	.30	.157775	14.93	.842225	49
12	.154208	14.58	.995537	.30	.158671	14.90	.841329	48
13	.155083	14.57	.995519	.30	.159565	14.87	.840435	47
14	.155957	14.55	.995501	.32	.160457	14.83	.839543	46
15	9.156830	14.50	9.995482	.30	9.161347	14.82	0.838653	45
16	.157700	14.48	.995464	.30	.162236	14.78	.837764	44
17	.158569	14.43	.995446	.32	.163123	14.75	.836877	43
18	.159435	14.43	.995427	.30	.164008	14.73	.835992	42
19	.160301	14.38	.995409	.32	.164892	14.70	.835108	41
20	9.161164	14.35	9.995390	.30	9.165774	14.67	0.834226	40
21	.162025	14.33	.995372	.32	.166654	14.63	.833346	39
22	.162885	14.30	.995353	.32	.167532	14.62	.832468	38
23	.163743	14.28	.995334	.30	.168409	14.58	.831591	37
24	.164600	14.23	.995316	.32	.169284	14.55	.830716	36
25	9.165454	14.22	9.995297	.32	9.170157	14.53	0.829843	35
26	.166307	14.20	.995278	.30	.171029	14.50	.828971	34
27	.167159	14.15	.995260	.32	.171899	14.47	.828101	33
28	.168008	14.13	.995241	.32	.172767	14.45	.827233	32
29	.168856	14.10	.995222	.32	.173634	14.42	.826366	31
30	9.169702	14.08	9.995203	.32	9.174499	14.38	0.825501	30
31	.170547	14.03	.995184	.32	.175362	14.37	.824638	29
32	.171389	14.02	.995165	.32	.176224	14.33	.823776	28
33	.172230	14.00	.995146	.32	.177084	14.30	.822916	27
34	.173070	13.97	.995127	.32	.177942	14.28	.822058	26
35	9.173908	13.93	9.995108	.32	9.178799	14.27	0.821201	25
36	.174744	13.90	.995089	.32	.179655	14.22	.820345	24
37	.175578	13.88	.995070	.32	.180508	14.20	.819492	23
38	.176411	13.85	.995051	.32	.181360	14.18	.818640	22
39	.177242	13.83	.995032	.32	.182211	14.13	.817789	21
40	9.178072	13.80	9.995013	.33	9.183059	14.13	0.816941	20
41	.178900	13.77	.994993	.32	.183907	14.08	.816093	19
42	.179726	13.75	.994974	.32	.184752	14.08	.815248	18
43	.180551	13.72	.994955	.33	.185597	14.03	.814403	17
44	.181374	13.70	.994935	.32	.186439	14.02	.813561	16
45	9.182196	13.67	9.994916	.33	9.187280	14.00	0.812720	15
46	.183016	13.63	.994896	.32	.188120	13.97	.811880	14
47	.183834	13.62	.994877	.33	.188958	13.93	.811042	13
48	.184651	13.58	.994857	.32	.189794	13.92	.810206	12
49	.185466	13.57	.994838	.33	.190629	13.88	.809371	11
50	9.186280	13.53	9.994818	.33	9.191462	13.87	0.808538	10
51	.187092	13.52	.994798	.32	.192294	13.83	.807706	9
52	.187903	13.48	.994779	.33	.193124	13.82	.806876	8
53	.188712	13.45	.994759	.33	.193953	13.78	.806047	7
54	.189519	13.43	.994739	.32	.194780	13.77	.805220	6
55	9.190325	13.42	9.994720	.33	9.195606	13.73	0.804394	5
56	.191130	13.38	.994700	.33	.196430	13.72	.803570	4
57	.191933	13.35	.994680	.33	.197253	13.68	.802747	3
58	.192734	13.33	.994660	.33	.198074	13.67	.801926	2
59	.193534	13.30	.994640	.33	.198894	13.65	.801106	1
60	9.194332		9.994620		9.199713		0.800287	0
	Cos.	D. 1″.	Sin.	D. 1″.	Cot.	D. 1″.	Tan.	M.

98° 81°

TABLE 55. — *Continued*

LOGARITHMIC SINES, COSINES, TANGENTS, AND COTANGENTS

170°

′.	Sin.	D. 1″.	Cos.	D. 1″.	Tan.	D. 1″.	Cot.	
0	9.194332	13.28	9.994620	.33	9.199713	13.60	0.800287	60
1	.195129	13.27	.994600	.33	.200529	13.60	.799471	59
2	.195925	13.23	.994580	.33	.201345	13.57	.798655	58
3	.196719	13.20	.994560	.33	.202159	13.53	.797841	57
4	.197511	13.18	.994540	.35	.202971	13.52	.797029	56
5	9.198302	13.15	9.994519	.33	9.203782	13.50	0.796218	55
6	.199091	13.13	.994499	.33	.204592	13.47	.795408	54
7	.199879	13.12	.994479	.33	.205400	13.45	.794600	53
8	.200666	13.08	.994459	.35	.206207	13.43	.793793	52
9	.201451	13.05	.994438	.33	.207013	13.40	.792987	51
10	9.202234	13.05	9.994418	.33	9.207817	13.37	0.792183	50
11	.203017	13.00	.994398	.35	.208619	13.35	.791381	49
12	.203797	13.00	.994377	.33	.209420	13.33	.790580	48
13	.204577	12.95	.994357	.35	.210220	13.30	.789780	47
14	.205354	12.95	.994336	.33	.211018	13.28	.788982	46
15	9.206131	12.92	9.994316	.35	9.211815	13.27	0.788185	45
16	.206906	12.88	.994295	.35	.212611	13.23	.787389	44
17	.207679	12.88	.994274	.33	.213405	13.22	.786595	43
18	.208452	12.83	.994254	.35	.214198	13.18	.785802	42
19	.209222	12.83	.994233	.35	.214989	13.18	.785011	41
20	9.209992	12.80	9.994212	.35	9.215780	13.13	0.784220	40
21	.210760	12.77	.994191	.33	.216568	13.13	.783432	39
22	.211526	12.75	.994171	.35	.217356	13.10	.782644	38
23	.212291	12.73	.994150	.35	.218142	13.07	.781858	37
24	.213055	12.72	.994129	.35	.218926	13.07	.781074	36
25	9.213818	12.68	9.994108	.35	9.219710	13.03	0.780290	35
26	.214579	12.65	.994087	.35	.220492	13.00	.779508	34
27	.215338	12.65	.994066	.35	.221272	13.00	.778728	33
28	.216097	12.62	.994045	.35	.222052	12.97	.777948	32
29	.216854	12.58	.994024	.35	.222830	12.95	.777170	31
30	9.217609	12.57	9.994003	.35	9.223607	12.92	0.776393	30
31	.218363	12.55	.993982	.37	.224382	12.90	.775618	29
32	.219116	12.53	.993960	.35	.225156	12.88	.774844	28
33	.219868	12.50	.993939	.35	.225929	12.85	.774071	27
34	.220618	12.48	.993918	.35	.226700	12.85	.773300	26
35	9.221367	12.47	9.993897	.37	9.227471	12.80	0.772529	25
36	.222115	12.43	.993875	.35	.228239	12.80	.771761	24
37	.222861	12.42	.993854	.37	.229007	12.77	.770993	23
38	.223606	12.38	.993832	.35	.229773	12.77	.770227	22
39	.224349	12.38	.993811	.37	.230539	12.72	.769461	21
40	9.225092	12.35	9.993789	.35	9.231302	12.72	0.768698	20
41	.225833	12.33	.993768	.37	.232065	12.68	.767935	19
42	.226573	12.30	.993746	.35	.232826	12.67	.767174	18
43	.227311	12.28	.993725	.37	.233586	12.65	.766414	17
44	.228048	12.27	.993703	.37	.234345	12.63	.765655	16
45	9.228784	12.23	9.993681	.35	9.235103	12.60	0.764897	15
46	.229518	12.23	.993660	.37	.235859	12.58	.764141	14
47	.230252	12.20	.993638	.37	.236614	12.57	.763386	13
48	.230984	12.18	.993616	.37	.237368	12.53	.762632	12
49	.231715	12.15	.993594	.37	.238120	12.53	.761880	11
50	9.232444	12.13	9.993572	.37	9.238872	12.50	0.761128	10
51	.233172	12.12	.993550	.37	.239622	12.48	.760378	9
52	.233899	12.10	.993528	.37	.240371	12.45	.759629	8
53	.234625	12.07	.993506	.37	.241118	12.45	.758882	7
54	.235349	12.07	.993484	.37	.241865	12.42	.758135	6
55	9.236073	12.03	9.993462	.37	9.242610	12.40	0.757390	5
56	.236795	12.00	.993440	.37	.243354	12.38	.756646	4
57	.237515	12.00	.993418	.37	.244097	12.37	.755903	3
58	.238235	11.97	.993396	.37	.244839	12.33	.755161	2
59	.238953	11.95	.993374	.38	.245579	12.33	.754421	1
60	9.239670		9.993351		9.246319		0.753681	0
	Cos.	D. 1″.	Sin.	D. 1″.	Cot.	D. 1″.	Tan.	M.

80′

TABLE 55. — *Continued*

LOGARITHMIC SINES, COSINES, TANGENTS, AND COTANGENTS

10° 169°

M.	Sin.	D. 1″.	Cos.	D. 1″.	Tan.	D. 1″.	Cot.	
0	9.239670	11.93	9.993351	.37	9.246319	12.30	0.753681	60
1	.240386	11.92	.993329	.37	.247057	12.28	.752943	59
2	.241101	11.88	.993307	.38	.247794	12.27	.752206	58
3	.241814	11.87	.993284	.37	.248530	12.23	.751470	57
4	.242526	11.85	.993262	.37	.249264	12.23	.750736	56
5	9.243237	11.83	9.993240	.38	9.249998	12.20	0.750002	55
6	.243947	11.82	.993217	.37	.250730	12.18	.749270	54
7	.244656	11.78	.993195	.38	.251461	12.17	.748539	53
8	.245363	11.77	.993172	.38	.252191	12.15	.747809	52
9	.246069	11.77	.993149	.37	.252920	12.13	.747080	51
10	9.246775	11.72	9.993127	.38	9.253648	12.10	0.746352	50
11	.247478	11.72	.993104	.38	.254374	12.10	.745626	49
12	.248181	11.70	.993081	.37	.255100	12.07	.744900	48
13	.248883	11.67	.993059	.38	.255824	12.05	.744176	47
14	.249583	11.65	.993036	.38	.256547	12.03	.743453	46
15	9.250282	11.63	9.993013	.38	9.257269	12.02	0.742731	45
16	.250980	11.62	.992990	.38	.257990	12.00	.742010	44
17	.251677	11.60	.992967	.38	.258710	11.98	.741290	43
18	.252373	11.57	.992944	.38	.259429	11.95	.740571	42
19	.253067	11.57	.992921	.38	.260146	11.95	.739854	41
20	9.253761	11.53	9.992898	.38	9.260863	11.92	0.739137	40
21	.254453	11.52	.992875	.38	.261578	11.90	.738422	39
22	.255144	11.50	.992852	.38	.262292	11.88	.737708	38
23	.255834	11.48	.992829	.38	.263005	11.87	.736995	37
24	.256523	11.47	.992806	.38	.263717	11.85	.736283	36
25	9.257211	11.45	9.992783	.40	9.264428	11.83	0.735572	35
26	.257898	11.42	.992759	.38	.265138	11.82	.734862	34
27	.258583	11.42	.992736	.38	.265847	11.80	.734153	33
28	.259268	11.38	.992713	.38	.266555	11.77	.733445	32
29	.259951	11.37	.992690	.40	.267261	11.77	.732739	31
30	9.260633	11.35	9.992666	.38	9.267967	11.73	0.732033	30
31	.261314	11.33	.992643	.40	.268671	11.73	.731329	29
32	.261994	11.32	.992619	.38	.269375	11.70	.730625	28
33	.262673	11.30	.992596	.40	.270077	11.70	.729923	27
34	.263351	11.27	.992572	.38	.270779	11.67	.729221	26
35	9.264027	11.27	9.992549	.40	9.271479	11.65	0.728521	25
36	.264703	11.23	.992525	.40	.272178	11.63	.727822	24
37	.265377	11.23	.992501	.38	.272876	11.62	.727124	23
38	.266051	11.20	.992478	.40	.273573	11.60	.726427	22
39	.266723	11.20	.992454	.40	.274269	11.58	.725731	21
40	9.267395	11.17	9.992430	.40	9.274964	11.57	0.725036	20
41	.268065	11.15	.992406	.40	.275658	11.55	.724342	19
42	.268734	11.13	.992382	.38	.276351	11.53	.723649	18
43	.269402	11.12	.992359	.40	.277043	11.52	.722957	17
44	.270069	11.10	.992335	.40	.277734	11.50	.722266	16
45	9.270735	11.08	9.992311	.40	9.278424	11.48	0.721576	15
46	.271400	11.07	.992287	.40	.279113	11.47	.720887	14
47	.272064	11.03	.992263	.40	.279801	11.45	.720199	13
48	.272726	11.03	.992239	.42	.280488	11.43	.719512	12
49	.273388	11.02	.992214	.40	.281174	11.40	.718826	11
50	9.274049	10.98	9.992190	.40	9.281858	11.40	0.718142	10
51	.274708	10.98	.992166	.40	.282542	11.38	.717458	9
52	.275367	10.97	.992142	.40	.283225	11.37	.716775	8
53	.276025	10.93	.992118	.42	.283907	11.35	.716093	7
54	.276681	10.93	.992093	.40	.284588	11.33	.715412	6
55	9.277337	10.90	9.992069	.42	9.285268	11.32	0.714732	5
56	.277991	10.90	.992044	.40	.285947	11.28	.714053	4
57	.278645	10.87	.992020	.40	.286624	11.28	.713376	3
58	.279297	10.85	.991996	.42	.287301	11.27	.712699	2
59	.279948	10.85	.991971	.40	.287977	11.25	.712023	1
60	9.280599		9.991947		9.288652		0.711348	0
	Cos.	D. 1″.	Sin.	D. 1″.	Cot.	D. 1″.	Tan.	M.

100° 79

TABLE 55. — *Continued*

LOGARITHMIC SINES, COSINES, TANGENTS, AND COTANGENTS

168°

Sin.	D. 1″.	Cos.	D. 1″.	Tan.	D. 1″.	Cot.	
9.280599	10.82	9.991947	.42	9.288652	11.23	0.711348	60
.281248	10.82	.991922	.42	.289326	11.22	.710674	59
.281897	10.78	.991897	.40	.289999	11.20	.710001	58
.282544	10.77	.991873	.42	.290671	11.18	.709329	57
.283190	10.77	.991848	.42	.291342	11.18	.708658	56
9.283836	10.73	9.991823	.40	9.292013	11.15	0.707987	55
.284480	10.73	.991799	.42	.292682	11.13	.707318	54
.285124	10.70	.991774	.42	.293350	11.12	.706650	53
.285766	10.70	.991749	.42	.294017	11.12	.705983	52
.286408	10.67	.991724	.42	.294684	11.08	.705316	51
9.287048	10.67	9.991699	.42	9.295349	11.07	0.704651	50
.287688	10.63	.991674	.42	.296013	11.07	.703987	49
.288326	10.63	.991649	.42	.296677	11.03	.703323	48
.288964	10.60	.991624	.42	.297339	11.03	.702661	47
.289600	10.60	.991599	.42	.298001	11.02	.701999	46
9.290236	10.57	9.991574	.42	9.298662	11.00	0.701338	45
.290870	10.57	.991549	.42	.299322	10.97	.700678	44
.291504	10.55	.991524	.43	.299980	10.97	.700020	43
.292137	10.52	.991498	.42	.300638	10.95	.699362	42
.292768	10.52	.991473	.42	.301295	10.93	.698705	41
9.293399	10.50	9.991448	.43	9.301951	10.93	0.698049	40
.294029	10.48	.991422	.42	.302607	10.90	.697393	39
.294658	10.47	.991397	.42	.303261	10.88	.696739	38
.295286	10.45	.991372	.43	.303914	10.88	.696086	37
.295913	10.43	.991346	.42	.304567	10.85	.695433	36
9.296539	10.42	9.991321	.43	9.305218	10.85	0.694782	35
.297164	10.40	.991295	.42	.305869	10.83	.694131	34
.297788	10.40	.991270	.43	.306519	10.82	.693481	33
.298412	10.37	.991244	.43	.307168	10.80	.692832	32
.299034	10.35	.991218	.42	.307816	10.78	.692184	31
9.299655	10.35	9.991193	.43	9.308463	10.77	0.691537	30
.300276	10.32	.991167	.43	.309109	10.75	.690891	29
.300895	10.32	.991141	.43	.309754	10.75	.690246	28
.301514	10.30	.991115	.42	.310399	10.72	.689601	27
.302132	10.27	.991090	.43	.311042	10.72	.688958	26
9.302748	10.27	9.991064	.43	9.311685	10.70	0.688315	25
.303364	10.25	.991038	.43	.312327	10.68	.687673	24
.303979	10.23	.991012	.43	.312968	10.67	.687032	23
.304593	10.23	.990986	.43	.313608	10.65	.686392	22
.305207	10.20	.990960	.43	.314247	10.63	.685753	21
9.305819	10.18	9.990934	.43	9.314885	10.63	0.685115	20
.306430	10.18	.990908	.43	.315523	10.60	.684477	19
.307041	10.15	.990882	.45	.316159	10.60	.683841	18
.307650	10.15	.990855	.43	.316795	10.58	.683205	17
.308259	10.13	.990829	.43	.317430	10.57	.682570	16
9.308867	10.12	9.990803	.43	9.318064	10.55	0.681936	15
.309474	10.10	.990777	.45	.318697	10.55	.681303	14
.310080	10.08	.990750	.43	.319330	10.52	.680670	13
.310685	10.07	.990724	.45	.319961	10.52	.680039	12
.311289	10.07	.990697	.43	.320592	10.50	.679408	11
9.311893	10.03	9.990671	.43	9.321222	10.48	0.678778	10
.312495	10.03	.990645	.45	.321851	10.47	.678149	9
.313097	10.02	.990618	.45	.322479	10.45	.677521	8
.313698	9.98	.990591	.43	.323106	10.45	.676894	7
.314297	10.00	.990565	.45	.323733	10.42	.676267	6
9.314897	9.97	9.990538	.45	9.324358	10.42	0.675642	5
.315495	9.95	.990511	.43	.324983	10.40	.675017	4
.316092	9.95	.990485	.45	.325607	10.40	.674393	3
.316689	9.92	.990458	.45	.326231	10.37	.673769	2
.317284	9.92	.990431	.45	.326853	10.37	.673147	1
9.317879		9.990404		9.327475		0.672525	0
Cos.	D. 1″.	Sin.	D. 1″.	Cot.	D. 1″.	Tan.	M.

LOGARITHMIC SINES, COSINES, TANGENTS, AND COTANGENTS

12° 167°

M.	Sin.	D. 1″.	Cos.	D. 1″.	Tan.	D. 1″.	Cot.	
0	9.317879	9.90	9.990404	.43	9.327475	10.33	0.672525	60
1	.318473	9.88	.990378	.45	.328095	10.33	.671905	59
2	.319066	9.87	.990351	.45	.328715	10.32	.671285	58
3	.319658	9.85	.990324	.45	.329334	10.32	.670666	57
4	.320249	9.85	.990297	.45	.329953	10.28	.670047	56
5	9.320840	9.83	9.990270	.45	9.330570	10.28	0.669430	55
6	.321430	9.82	.990243	.47	.331187	10.27	.668813	54
7	.322019	9.80	.990215	.45	.331803	10.25	.668197	53
8	.322607	9.78	.990188	.45	.332418	10.25	.667582	52
9	.323194	9.77	.990161	.45	.333033	10.22	.666967	51
10	9.323780	9.77	9.990134	.45	9.333646	10.22	0.666354	50
11	.324366	9.73	.990107	.47	.334259	10.20	.665741	49
12	.324950	9.73	.990079	.45	.334871	10.18	.665129	48
13	.325534	9.72	.990052	.45	.335482	10.18	.664518	47
14	.326117	9.72	.990025	.47	.336093	10.15	.663907	46
15	9.326700	9.68	9.989997	.45	9.336702	10.15	0.663298	45
16	.327281	9.68	.989970	.47	.337311	10.13	.662689	44
17	.327862	9.67	.989942	.45	.337919	10.13	.662081	43
18	.328442	9.65	.989915	.47	.338527	10.10	.661473	42
19	.329021	9.63	.989887	.45	.339133	10.10	.660867	41
20	9.329599	9.62	9.989860	.47	9.339739	10.08	0.660261	40
21	.330176	9.62	.989832	.47	.340344	10.07	.659656	39
22	.330753	9.60	.989804	.45	.340948	10.07	.659052	38
23	.331329	9.57	.989777	.47	.341552	10.05	.658448	37
24	.331903	9.58	.989749	.47	.342155	10.03	.657845	36
25	9.332478	9.55	9.989721	.47	9.342757	10.02	0.657243	35
26	.333051	9.55	.989693	.47	.343358	10.00	.656642	34
27	.333624	9.52	.989665	.47	.343958	10.00	.656042	33
28	.334195	9.53	.989637	.45	.344558	9.98	.655442	32
29	.334767	9.50	.989610	.47	.345157	9.97	.654843	31
30	9.335337	9.48	9.989582	.48	9.345755	9.97	0.654245	30
31	.335906	9.48	.989553	.47	.346353	9.93	.653647	29
32	.336475	9.47	.989525	.47	.346949	9.93	.653051	28
33	.337043	9.45	.989497	.47	.347545	9.93	.652455	27
34	.337610	9.43	.989469	.47	.348141	9.90	.651859	26
35	9.338176	9.43	9.989441	.47	9.348735	9.90	0.651265	25
36	.338742	9.42	.989413	.47	.349329	9.88	.650671	24
37	.339307	9.40	.989385	.48	.349922	9.87	.650078	23
38	.339871	9.38	.989356	.47	.350514	9.87	.649486	22
39	.340434	9.37	.989328	.47	.351106	9.85	.648894	21
40	9.340996	9.37	9.989300	.48	9.351697	9.83	0.648303	20
41	.341558	9.35	.989271	.47	.352287	9.82	.647713	19
42	.342119	9.33	.989243	.48	.352876	9.82	.647124	18
43	.342679	9.33	.989214	.47	.353465	9.80	.646535	17
44	.343239	9.30	.989186	.48	.354053	9.78	.645947	16
45	9.343797	9.30	9.989157	.48	9.354640	9.78	0.645360	15
46	.344355	9.28	.989128	.47	.355227	9.77	.644773	14
47	.344912	9.28	.989100	.48	.355813	9.75	.644187	13
48	.345469	9.25	.989071	.48	.356398	9.73	.643602	12
49	.346024	9.25	.989042	.47	.356982	9.73	.643018	11
50	9.346579	9.25	9.989014	.48	9.357566	9.72	0.642434	10
51	.347134	9.22	.988985	.48	.358149	9.70	.641851	9
52	.347687	9.22	.988956	.48	.358731	9.70	.641269	8
53	.348240	9.20	.988927	.48	.359313	9.67	.640687	7
54	.348792	9.18	.988898	.48	.359893	9.68	.640107	6
55	9.349343	9.17	9.988869	.48	9.360474	9.65	0.639526	5
56	.349893	9.17	.988840	.48	.361053	9.65	.638947	4
57	.350443	9.15	.988811	.48	.361632	9.63	.638368	3
58	.350992	9.13	.988782	.48	.362210	9.62	.637790	2
59	.351540	9.13	.988753	.48	.362787	9.62	.637213	1
60	9.352088		9.988724		9.363364		0.636636	0
	Cos.	D. 1″.	Sin.	D. 1″.	Cot.	D. 1″.	Tan.	M.

102° 77°

Sin.	D. 1″.	Cos.	D. 1″.	Tan.	D. 1″.	Cot.	
9.352088	9.12	9.988724	.48	9.363364	9.60	0.636636	60
.352635	9.10	.988695	.48	.363940	9.58	.636060	59
.353181	9.08	.988666	.50	.364515	9.58	.635485	58
.353726	9.08	.988636	.48	.365090	9.57	.634910	57
.354271	9.07	.988607	.48	.365664	9.55	.634336	56
9.354815	9.05	9.988578	.50	9.366237	9.55	0.633763	55
.355358	9.05	.988548	.48	.366810	9.53	.633190	54
.355901	9.03	.988519	.50	.367382	9.52	.632618	53
.356443	9.02	.988489	.48	.367953	9.52	.632047	52
.356984	9.00	.988460	.50	.368524	9.50	.631476	51
9.357524	9.00	9.988430	.48	9.369094	9.48	0.630906	50
.358064	8.98	.988401	.50	.369663	9.48	.630337	49
.358603	8.97	.988371	.48	.370232	9.45	.629768	48
.359141	8.95	.988342	.50	.370799	9.47	.629201	47
.359678	8.95	.988312	.50	.371367	9.43	.628633	46
9.360215	8.95	9.988282	.50	9.371933	9.43	0.628067	45
.360752	8.92	.988252	.48	.372499	9.42	.627501	44
.361287	8.92	.988223	.50	.373064	9.42	.626936	43
.361822	8.90	.988193	.50	.373629	9.40	.626371	42
.362356	8.88	.988163	.50	.374193	9.38	.625807	41
9.362889	8.88	9.988133	.50	9.374756	9.38	0.625244	40
.363422	8.87	.988103	.50	.375319	9.37	.624681	39
.363954	8.85	.988073	.50	.375881	9.35	.624119	38
.364485	8.85	.988043	.50	.376442	9.35	.623558	37
.365016	8.83	.988013	.50	.377003	9.33	.622997	36
9.365546	8.82	9.987983	.50	9.377563	9.32	0.622437	35
.366075	8.82	.987953	.52	.378122	9.32	.621878	34
.366604	8.78	.987922	.50	.378681	9.30	.621319	33
.367131	8.80	.987892	.50	.379239	9.30	.620761	32
.367659	8.77	.987862	.50	.379797	9.28	.620203	31
9.368185	8.77	9.987832	.52	9.380354	9.27	0.619646	30
.368711	8.75	.987801	.50	.380910	9.27	.619090	29
.369236	8.75	.987771	.52	.381466	9.23	.618534	28
.369761	8.73	.987740	.50	.382020	9.25	.617980	27
.370285	8.72	.987710	.52	.382575	9.23	.617425	26
9.370808	8.70	9.987679	.50	9.383129	9.22	0.616871	25
.371330	8.70	.987649	.52	.383682	9.20	.616318	24
.371852	8.68	.987618	.50	.384234	9.20	.615766	23
.372373	8.68	.987588	.52	.384786	9.18	.615214	22
.372894	8.67	.987557	.52	.385337	9.18	.614663	21
9.373414	8.65	9.987526	.50	9.385888	9.17	0.614112	20
.373933	8.65	.987496	.52	.386438	9.15	.613562	19
.374452	8.63	.987465	.52	.386987	9.15	.613013	18
.374970	8.62	.987434	.52	.387536	9.13	.612464	17
.375487	8.60	.987403	.52	.388084	9.12	.611916	16
9.376003	8.60	9.987372	.52	9.388631	9.12	0.611369	15
.376519	8.60	.987341	.52	.389178	9.10	.610822	14
.377035	8.57	.987310	.52	.389724	9.10	.610276	13
.377549	8.57	.987279	.52	.390270	9.08	.609730	12
.378063	8.57	.987248	.52	.390815	9.08	.609185	11
9.378577	8.53	9.987217	.52	9.391360	9.05	0.608640	10
.379089	8.53	.987186	.52	.391903	9.07	.608097	9
.379601	8.53	.987155	.52	.392447	9.03	.607553	8
.380113	8.52	.987124	.53	.392989	9.03	.607011	7
.380624	8.50	.987092	.52	.393531	9.03	.606469	6
9.381134	8.48	9.987061	.52	9.394073	9.02	0.605927	5
.381643	8.48	.987030	.53	.394614	9.00	.605386	4
.382152	8.48	.986998	.52	.395154	9.00	.604846	3
.382661	8.45	.986967	.52	.395694	8.98	.604306	2
.383168	8.45	.986936	.53	.396233	8.97	.603767	1
9.383675		9.986904		9.396771		0.603229	0
Cos.	D. 1″.	Sin.	D. 1″.	Cot.	D. 1″.	Tan.	M.

TABLE 55. — *Continued*

LOGARITHMIC SINES, COSINES, TANGENTS, AND COTANGENTS

14° 165°

M.	Sin.	D. 1″.	Cos.	D. 1″.	Tan.	D. 1″.	Cot.	
0	9.383675	8.45	9.986904	.52	9.396771	8.97	0.603229	60
1	.384182	8.42	.986873	.53	.397309	8.95	.602691	59
2	.384687	8.42	.986841	.53	.397846	8.95	.602154	58
3	.385192	8.42	.986809	.52	.398383	8.93	.601617	57
4	.385697	8.40	.986778	.53	.398919	8.93	.601081	56
5	9.386201	8.38	9.986746	.53	9.399455	8.92	0.600545	55
6	.386704	8.38	.986714	.52	.399990	8.90	.600010	54
7	.387207	8.37	.986683	.53	.400524	8.90	.599476	53
8	.387709	8.35	.986651	.53	.401058	8.88	.598942	52
9	.388210	8.35	.986619	.53	.401591	8.88	.598409	51
10	9.388711	8.33	9.986587	.53	9.402124	8.87	0.597876	50
11	.389211	8.33	.986555	.53	.402656	8.85	.597344	49
12	.389711	8.32	.986523	.53	.403187	8.85	.596813	48
13	.390210	8.30	.986491	.53	.403718	8.85	.596282	47
14	.390708	8.30	.986459	.53	.404249	8.82	.595751	46
15	9.391206	8.28	9.986427	.53	9.404778	8.83	0.595222	45
16	.391703	8.27	.986395	.53	.405308	8.80	.594692	44
17	.392199	8.27	.986363	.53	.405836	8.80	.594164	43
18	.392695	8.27	.986331	.53	.406364	8.80	.593636	42
19	.393191	8.23	.986299	.55	.406892	8.78	.593108	41
20	9.393685	8.23	9.986266	.53	9.407419	8.77	0.592581	40
21	.394179	8.23	.986234	.53	.407945	8.77	.592055	39
22	.394673	8.22	.986202	.55	.408471	8.75	.591529	38
23	.395166	8.20	.986169	.53	.408996	8.75	.591004	37
24	.395658	8.20	.986137	.55	.409521	8.73	.590479	36
25	9.396150	8.18	9.986104	.53	9.410045	8.73	0.589955	35
26	.396641	8.18	.986072	.55	.410569	8.72	.589431	34
27	.397132	8.15	.986039	.53	.411092	8.72	.588908	33
28	.397621	8.17	.986007	.55	.411615	8.70	.588385	32
29	.398111	8.15	.985974	.53	.412137	8.68	.587863	31
30	9.398600	8.13	9.985942	.55	9.412658	8.68	0.587342	30
31	.399088	8.12	.985909	.55	.413179	8.67	.586821	29
32	.399575	8.12	.985876	.55	.413699	8.67	.586301	28
33	.400062	8.12	.985843	.53	.414219	8.65	.585781	27
34	.400549	8.10	.985811	.55	.414738	8.65	.585262	26
35	9.401035	8.08	9.985778	.55	9.415257	8.63	0.584743	25
36	.401520	8.08	.985745	.55	.415775	8.63	.584225	24
37	.402005	8.07	.985712	.55	.416293	8.62	.583707	23
38	.402489	8.05	.985679	.55	.416810	8.60	.583190	22
39	.402972	8.05	.985646	.55	.417326	8.60	.582674	21
40	9.403455	8.05	9.985613	.55	9.417842	8.60	0.582158	20
41	.403938	8.03	.985580	.55	.418358	8.58	.581642	19
42	.404420	8.02	.985547	.55	.418873	8.57	.581127	18
43	.404901	8.02	.985514	.57	.419387	8.57	.580613	17
44	.405382	8.00	.985480	.55	.419901	8.57	.580099	16
45	9.405862	7.98	9.985447	.55	9.420415	8.53	0.579585	15
46	.406341	7.98	.985414	.55	.420927	8.55	.579073	14
47	.406820	7.98	.985381	.57	.421440	8.53	.578560	13
48	.407299	7.97	.985347	.55	.421952	8.52	.578048	12
49	.407777	7.95	.985314	.57	.422463	8.52	.577537	11
50	9.408254	7.95	9.985280	.55	9.422974	8.50	0.577026	10
51	.408731	7.93	.985247	.57	.423484	8.48	.576516	9
52	.409207	7.92	.985213	.55	.423993	8.50	.576007	8
53	.409682	7.92	.985180	.57	.424503	8.47	.575497	7
54	.410157	7.92	.985146	.55	.425011	8.47	.574989	6
55	9.410632	7.90	9.985113	.57	9.425519	8.47	0.574481	5
56	.411106	7.88	.985079	.57	.426027	8.45	.573973	4
57	.411579	7.88	.985045	.57	.426534	8.45	.573466	3
58	.412052	7.87	.985011	.55	.427041	8.43	.572959	2
59	.412524	7.87	.984978	.57	.427547	8.42	.572453	1
60	9.412996		9.984944		9.428052		0.571948	0
	Cos.	D. 1″.	Sin.	D. 1″.	Cot.	D. 1″.	Tan.	M.

104° 75°

TABLE 55. — *Continued*

LOGARITHMIC SINES, COSINES, TANGENTS, AND COTANGENTS

15° 164°

M.	Sin.	D. 1″.	Cos.	D. 1″.	Tan.	D. 1″.	Cot.	
0	9.412996	7.85	9.984944	.57	9.428052	8.43	0.571948	60
1	.413467	7.85	.984910	.57	.428558	8.40	.571442	59
2	.413938	7.83	.984876	.57	.429062	8.40	.570938	58
3	.414408	7.83	.984842	.57	.429566	8.40	.570434	57
4	.414878	7.82	.984808	.57	.430070	8.38	.569930	56
5	9.415347	7.80	9.984774	.57	9.430573	8.37	0.569427	55
6	.415815	7.80	.984740	.57	.431075	8.37	.568925	54
7	.416283	7.80	.984706	.57	.431577	8.37	.568423	53
8	.416751	7.77	.984672	.57	.432079	8.35	.567921	52
9	.417217	7.78	.984638	.58	.432580	8.33	.567420	51
10	9.417684	7.77	9.984603	.57	9.433080	8.33	0.566920	50
11	.418150	7.75	.984569	.57	.433580	8.33	.566420	49
12	.418615	7.73	.984535	.58	.434080	8.32	.565920	48
13	.419079	7.75	.984500	.57	.434579	8.32	.565421	47
14	.419544	7.72	.984466	.57	.435078	8.30	.564922	46
15	9.420007	7.72	9.984432	.58	9.435576	8.28	0.564424	45
16	.420470	7.72	.984397	.57	.436073	8.28	.563927	44
17	.420933	7.70	.984363	.58	.436570	8.28	.563430	43
18	.421395	7.70	.984328	.57	.437067	8.27	.562933	42
19	.421857	7.68	.984294	.58	.437563	8.27	.562437	41
20	9.422318	7.67	9.984259	.58	9.438059	8.25	0.561941	40
21	.422778	7.67	.984224	.57	.438554	8.23	.561446	39
22	.423238	7.65	.934190	.58	.439048	8.25	.560952	38
23	.423697	7.65	.984155	.58	.439543	8.22	.560457	37
24	.424156	7.65	.984120	.58	.440036	8.22	.559964	36
25	9.424615	7.63	9.984085	.58	9.440529	8.22	0.559471	35
26	.425073	7.62	.984050	.58	.441022	8.20	.558978	34
27	.425530	7.62	.984015	.57	.441514	8.20	.558486	33
28	.425987	7.60	.983981	.58	.442006	8.18	.557994	32
29	.426443	7.60	.983946	.58	.442497	8.18	.557503	31
30	9.426899	7.58	9.983911	.60	9.442988	8.18	0.557012	30
31	.427354	7.58	.983875	.58	.443479	8.15	.556521	29
32	.427809	7.57	.983840	.58	.443968	8.17	.556032	28
33	.428263	7.57	.983805	.58	.444458	8.15	.555542	27
34	.428717	7.55	.983770	.58	.444947	8.13	.555053	26
35	9.429170	7.55	9.983735	.58	9.445435	8.13	0.554565	25
36	.429623	7.53	.983700	.60	.445923	8.13	.554077	24
37	.430075	7.53	.983664	.58	.446411	8.12	.553589	23
38	.430527	7.52	.983629	.58	.446898	8.10	.553102	22
39	.430978	7.52	.983594	.60	.447384	8.10	.552616	21
40	9.431429	7.50	9.983558	.58	9.447870	8.10	0.552130	20
41	.431879	7.50	.983523	.60	.448356	8.08	.551644	19
42	.432329	7.48	.983487	.58	.448841	8.08	.551159	18
43	.432778	7.47	.983452	.60	.449326	8.07	.550674	17
44	.433226	7.48	.983416	.58	.449810	8.07	.550190	16
45	9.433675	7.45	9.983381	.60	9.450294	8.05	0.549706	15
46	.434122	7.45	.983345	.60	.450777	8.05	.549223	14
47	.434569	7.45	.983309	.60	.451260	8.05	.548740	13
48	.435016	7.43	.983273	.58	.451743	8.03	.548257	12
49	.435462	7.43	.983238	.60	.452225	8.02	.547775	11
50	9.435908	7.42	9.983202	.60	9.452706	8.02	0.547294	10
51	.436353	7.42	.983166	.60	.453187	8.02	.546813	9
52	.436798	7.40	.983130	.60	.453668	8.00	.546332	8
53	.437242	7.40	.983094	.60	.454148	8.00	.545852	7
54	.437686	7.38	.983058	.60	.454628	7.98	.545372	6
55	9.438129	7.38	9.983022	.60	9.455107	7.98	0.544893	5
56	.438572	7.37	.982986	.60	.455586	7.97	.544414	4
57	.439014	7.37	.982950	.60	.456064	7.97	.543936	3
58	.439456	7.35	.982914	.60	.456542	7.95	.543458	2
59	.439897	7.35	.982878	.60	.457019	7.95	.542981	1
60	9.440338		9.982842		9.457496		0.542504	0
	Cos.	D. 1″.	Sin.	D. 1″.	Cot.	D. 1″.	Tan.	M

75° 75

TABLE 55. — *Continued*

LOGARITHMIC SINES, COSINES, TANGENTS, AND COTANGENTS

16° 163°

M.	Sin.	D. 1″.	Cos.	D. 1″.	Tan.	D. 1″.	Cot.	
0	9.440338	7.33	9.982842	.62	9.457496	7.95	0.542504	60
1	.440778	7.33	.982805	.60	.457973	7.93	.542027	59
2	.441218	7.33	.982769	.60	.458449	7.93	.541551	58
3	.441658	7.30	.982733	.62	.458925	7.92	.541075	57
4	.442096	7.32	.982696	.60	.459400	7.92	.540600	56
5	9.442535	7.30	9.982660	.60	9.459875	7.90	0.540125	55
6	.442973	7.28	.982624	.62	.460349	7.90	.539651	54
7	.443410	7.28	.982587	.60	.460823	7.90	.539177	53
8	.443847	7.28	.982551	.62	.461297	7.88	.538703	52
9	.444284	7.27	.982514	.62	.461770	7.87	.538230	51
10	9.444720	7.25	9.982477	.60	9.462242	7.88	0.537758	50
11	.445155	7.25	.982441	.62	.462715	7.85	.537285	49
12	.445590	7.25	.982404	.62	.463186	7.87	.536814	48
13	.446025	7.23	.982367	.60	.463658	7.83	.536342	47
14	.446459	7.23	.982331	.62	.464128	7.85	.535872	46
15	9.446893	7.22	9.982294	.62	9.464599	7.83	0.535401	45
16	.447326	7.22	.982257	.62	.465069	7.83	.534931	44
17	.447759	7.20	.982220	.62	.465539	7.82	.534461	43
18	.448191	7.20	.982183	.62	.466008	7.82	.533992	42
19	.448623	7.18	.982146	.62	.466477	7.80	.533523	41
20	9.449054	7.18	9.982109	.62	9.466945	7.80	0.533055	40
21	.449485	7.17	.982072	.62	.467413	7.78	.532587	39
22	.449915	7.17	.982035	.62	.467880	7.78	.532120	38
23	.450345	7.17	.981998	.62	.468347	7.78	.531653	37
24	.450775	7.15	.981961	.62	.468814	7.77	.531186	36
25	9.451204	7.13	9.981924	.63	9.469280	7.77	0.530720	35
26	.451632	7.13	.981886	.62	.469746	7.75	.530254	34
27	.452060	7.13	.981849	.62	.470211	7.75	.529789	33
28	.452488	7.12	.981812	.63	.470676	7.75	.529324	32
29	.452915	7.12	.981774	.62	.471141	7.73	.528859	31
30	9.453342	7.10	9.981737	.62	9.471605	7.73	0.528395	30
31	.453768	7.10	.981700	.63	.472069	7.72	.527931	29
32	.454194	7.08	.981662	.62	.472532	7.72	.527468	28
33	.454619	7.08	.981625	.63	.472995	7.70	.527005	27
34	.455044	7.08	.981587	.63	.473457	7.70	.526543	26
35	9.455469	7.07	9.981549	.62	9.473919	7.70	0.526081	25
36	.455893	7.05	.981512	.63	.474381	7.68	.525619	24
37	.456316	7.05	.981474	.63	.474842	7.68	.525158	23
38	.456739	7.05	.981436	.62	.475303	7.67	.524697	22
39	.457162	7.03	.981399	.63	.475763	7.67	.524237	21
40	9.457584	7.03	9.981361	.63	9.476223	7.67	0.523777	20
41	.458006	7.02	.981323	.63	.476683	7.65	.523317	19
42	.458427	7.02	.981285	.63	.477142	7.65	.522858	18
43	.458848	7.00	.981247	.63	.477601	7.63	.522399	17
44	.459268	7.00	.981209	.63	.478059	7.63	.521941	16
45	9.459688	7.00	9.981171	.63	9.478517	7.63	0.521483	15
46	.460108	6.98	.981133	.63	.478975	7.62	.521025	14
47	.460527	6.98	.981095	.63	.479432	7.62	.520568	13
48	.460946	6.97	.981057	.63	.479889	7.60	.520111	12
49	.461364	6.97	.981019	.63	.480345	7.60	.519655	11
50	9.461782	6.95	9.980981	.65	9.480801	7.60	0.519199	10
51	.462199	6.95	.980942	.63	.481257	7.58	.518743	9
52	.462616	6.93	.980904	.63	.481712	7.58	.518288	8
53	.463032	6.93	.980866	.65	.482167	7.57	.517833	7
54	.463448	6.93	.980827	.63	.482621	7.57	.517379	6
55	9.463864	6.92	9.980789	.65	9.483075	7.57	0.516925	5
56	.464279	6.92	.980750	.63	.483529	7.55	.516471	4
57	.464694	6.90	.980712	.65	.483982	7.55	.516018	3
58	.465108	6.90	.980673	.63	.484435	7.53	.515565	2
59	.465522	6.88	.980635	.65	.484887	7.53	.515113	1
60	9.465935		9.980596		9.485339		0.514661	0
	Cos.	D. 1″.	Sin.	D. 1″.	Cot.	D. 1″.	Tan.	M.

106° 73°

Sin.	D. 1″.	Cos.	D. 1″.	Tan.	D. 1″.	Cot.	
9.465935	6.88	9.980596	.63	9.485339	7.53	0.514661	60
.466348	6.88	.980558	.65	.485791	7.52	.514209	59
.466761	6.87	.980519	.65	.486242	7.52	.513758	58
.467173	6.87	.980480	.63	.486693	7.50	.513307	57
.467585	6.85	.980442	.65	.487143	7.50	.512857	56
9.467996	6.85	9.980403	.65	9.487593	7.50	0.512407	55
.468407	6.83	.980364	.65	.488043	7.48	.511957	54
.468817	6.83	.980325	.65	.488492	7.48	.511508	53
.469227	6.83	.980286	.65	.488941	7.48	.511059	52
.469637	6.82	.980247	.65	.489390	7.47	.510610	51
9.470046	6.82	9.980208	.65	9.489838	7.47	0.510162	50
.470455	6.80	.980169	.65	.490286	7.45	.509714	49
.470863	6.80	.980130	.65	.490733	7.45	.509267	48
.471271	6.80	.980091	.65	.491180	7.45	.508820	47
.471679	6.78	.980052	.67	.491627	7.43	.508373	46
9.472086	6.77	9.980012	.65	9.492073	7.43	0.507927	45
.472492	6.77	.979973	.65	.492519	7.43	.507481	44
.472898	6.77	.979934	.65	.492965	7.42	.507035	43
.473304	6.77	.979895	.67	.493410	7.40	.506590	42
.473710	6.75	.979855	.65	.493854	7.42	.506146	41
9.474115	6.73	9.979816	.67	9.494299	7.40	0.505701	40
.474519	6.73	.979776	.65	.494743	7.38	.505257	39
.474923	6.73	.979737	.67	.495186	7.40	.504814	38
.475327	6.72	.979697	.65	.495630	7.38	.504370	37
.475730	6.72	.979658	.67	.496073	7.37	.503927	36
9.476133	6.72	9.979618	.65	9.496515	7.37	0.503485	35
.476536	6.70	.979579	.67	.496957	7.37	.503043	34
.476938	6.70	.979539	.67	.497399	7.37	.502601	33
.477340	6.68	.979499	.67	.497841	7.35	.502159	32
.477741	6.68	.979459	.65	.498282	7.33	.501718	31
9.478142	6.67	9.979420	.67	9.498722	7.35	0.501278	30
.478542	6.67	.979380	.67	.499163	7.33	.500837	29
.478942	6.67	.979340	.67	.499603	7.32	.500397	28
.479342	6.65	.979300	.67	.500042	7.32	.499958	27
.479741	6.65	.979260	.67	.500481	7.32	.499519	26
9.480140	6.65	9.979220	.67	9.500920	7.32	0.499080	25
.480539	6.63	.979180	.67	.501359	7.30	.498641	24
.480937	6.62	.979140	.67	.501797	7.30	.498203	23
.481334	6.62	.979100	.68	.502235	7.28	.497765	22
.481731	6.62	.979059	.67	.502672	7.28	.497328	21
9.482128	6.62	9.979019	.67	9.503109	7.28	0.496891	20
.482525	6.60	.978979	.67	.503546	7.27	.496454	19
.482921	6.58	.978939	.68	.503982	7.27	.496018	18
.483316	6.60	.978898	.67	.504418	7.27	.495582	17
.483712	6.58	.978858	.68	.504854	7.25	.495146	16
9.484107	6.57	9.978817	.67	9.505289	7.25	0.494711	15
.484501	6.57	.978777	.67	.505724	7.25	.494276	14
.484895	6.57	.978737	.68	.506159	7.23	.493841	13
.485289	6.55	.978696	.68	.506593	7.23	.493407	12
.485682	6.55	.978655	.67	.507027	7.22	.492973	11
9.486075	6.53	9.978615	.68	9.507460	7.22	0.492540	10
.486467	6.55	.978574	.68	.507893	7.22	.492107	9
.486860	6.52	.978533	.67	.508326	7.22	.491674	8
.487251	6.53	.978493	.68	.508759	7.20	.491241	7
.487643	6.52	.978452	.68	.509191	7.18	.490809	6
9.488034	6.50	9.978411	.68	9.509622	7.20	0.490378	5
.488424	6.50	.978370	.68	.510054	7.18	.489946	4
.488814	6.50	.978329	.68	.510485	7.18	.489515	3
.489204	6.48	.978288	.68	.510916	7.17	.489084	2
.489593	6.48	.978247	.68	.511346	7.17	.488654	1
9.489982		9.978206		9.511776		0.488224	0
Cos.	D. 1″.	Sin.	D. 1″.	Cot.	D. 1″.	Tan.	

TABLE 55. — *Continued*

LOGARITHMIC SINES, COSINES, TANGENTS, AND COTANGENTS

18° 161°

M.	Sin.	D. 1″.	Cos.	D. 1″.	Tan.	D. 1″.	Cot.	
0	9.489982	6.48	9.978206	.68	9.511776	7.17	0.488224	60
1	.490371	6.47	.978165	.68	.512206	7.15	.487794	59
2	.490759	6.47	.978124	.68	.512635	7.15	.487365	58
3	.491147	6.47	.978083	.68	.513064	7.15	.486936	57
4	.491535	6.45	.978042	.68	.513493	7.13	.486507	56
5	9.491922	6.43	9.978001	.70	9.513921	7.13	0.486079	55
6	.492308	6.45	.977959	.68	.514349	7.13	.485651	54
7	.492695	6.43	.977918	.68	.514777	7.12	.485223	53
8	.493081	6.42	.977877	.70	.515204	7.12	.484796	52
9	.493466	6.42	.977835	.68	.515631	7.10	.484369	51
10	9.493851	6.42	9.977794	.70	9.516057	7.12	0.483943	50
11	.494236	6.42	.977752	.68	.516484	7.10	.483516	49
12	.494621	6.40	.977711	.70	.516910	7.08	.483090	48
13	.495005	6.38	.977669	.68	.517335	7.10	.482665	47
14	.495388	6.40	.977628	.70	.517761	7.08	.482239	46
15	9.495772	6.37	9.977586	.70	9.518186	7.07	0.481814	45
16	.496154	6.38	.977544	.68	.518610	7.07	.481390	44
17	.496537	6.37	.977503	.70	.519034	7.07	.480966	43
18	.496919	6.37	.977461	.70	.519458	7.07	.480542	42
19	.497301	6.35	.977419	.70	.519882	7.05	.480118	41
20	9.497682	6.37	9.977377	.70	9.520305	7.05	0.479695	40
21	.498064	6.33	.977335	.70	.520728	7.05	.479272	39
22	.498444	6.35	.977293	.70	.521151	7.03	.478849	38
23	.498825	6.32	.977251	.70	.521573	7.03	.478427	37
24	.499204	6.33	.977209	.70	.521995	7.03	.478005	36
25	9.499584	6.32	9.977167	.70	9.522417	7.02	0.477583	35
26	.499963	6.32	.977125	.70	.522838	7.02	.477162	34
27	.500342	6.32	.977083	.70	.523259	7.02	.476741	33
28	.500721	6.30	.977041	.70	.523680	7.00	.476320	32
29	.501099	6.28	.976999	.70	.524100	7.00	.475900	31
30	9.501476	6.30	9.976957	.72	9.524520	7.00	0.475480	30
31	.501854	6.28	.976914	.70	.524940	6.98	.475060	29
32	.502231	6.27	.976872	.70	.525359	6.98	.474641	28
33	.502607	6.28	.976830	.72	.525778	6.98	.474222	27
34	.502984	6.27	.976787	.70	.526197	6.97	.473803	26
35	9.503360	6.25	9.976745	.72	9.526615	6.97	0.473385	25
36	.503735	6.25	.976702	.70	.527033	6.97	.472967	24
37	.504110	6.25	.976660	.72	.527451	6.95	.472549	23
38	.504485	6.25	.976617	.72	.527868	6.95	.472132	22
39	.504860	6.23	.976574	.70	.528285	6.95	.471715	21
40	9.505234	6.23	9.976532	.72	9.528702	6.95	0.471298	20
41	.505608	6.22	.976489	.72	.529119	6.93	.470881	19
42	.505981	6.22	.976446	.70	.529535	6.93	.470465	18
43	.506354	6.22	.976404	.72	.529951	6.92	.470049	17
44	.506727	6.20	.976361	.72	.530366	6.92	.469634	16
45	9.507099	6.20	9.976318	.72	9.530781	6.92	0.469219	15
46	.507471	6.20	.976275	.72	.531196	6.92	.468804	14
47	.507843	6.18	.976232	.72	.531611	6.90	.468389	13
48	.508214	6.18	.976189	.72	.532025	6.90	.467975	12
49	.508585	6.18	.976146	.72	.532439	6.90	.467561	11
50	9.508956	6.17	9.976103	.72	9.532853	6.88	0.467147	10
51	.509326	6.17	.976060	.72	.533266	6.88	.466734	9
52	.509696	6.15	.976017	.72	.533679	6.88	.466321	8
53	.510065	6.15	.975974	.73	.534092	6.87	.465908	7
54	.510434	6.15	.975930	.72	.534504	6.87	.465496	6
55	9.510803	6.15	9.975887	.72	9.534916	6.87	0.465084	5
56	.511172	6.13	.975844	.73	.535328	6.85	.464672	4
57	.511540	6.12	.975800	.72	.535739	6.85	.464261	3
58	.511907	6.13	.975757	.72	.536150	6.85	.463850	2
59	.512275	6.12	.975714	.73	.536561	6.85	.463439	1
60	9.512642		9.975670		9.536972		0.463028	0
	Cos.	D. 1″.	Sin.	D. 1″.	Cot.	D. 1″.	Tan.	M.

108° 71°

LOGARITHMIC SINES, COSINES, TANGENTS, AND COTANGENTS

19° 160

M.	Sin.	D. 1″.	Cos.	D. 1″.	Tan.	D. 1″.	Cot.	
0	9.512642	6.12	9.975670	.72	9.536972	6.83	0.463028	60
1	.513009	6.10	.975627	.73	.537382	6.83	.462618	59
2	.513375	6.10	.975583	.73	.537792	6.83	.462208	58
3	.513741	6.10	.975539	.72	.538202	6.82	.461798	57
4	.514107	6.08	.975496	.73	.538611	6.82	.461389	56
5	9.514472	6.08	9.975452	.73	9.539020	6.82	0.460980	55
6	.514837	6.08	.975408	.72	.539429	6.80	.460571	54
7	.515202	6.07	.975365	.73	.539837	6.80	.460163	53
8	.515566	6.07	.975321	.73	.540245	6.80	.459755	52
9	.515930	6.07	.975277	.73	.540653	6.80	.459347	51
10	9.516294	6.05	9.975233	.73	9.541061	6.78	0.458939	50
11	.516657	6.05	.975189	.73	.541468	6.78	.458532	49
12	.517020	6.03	.975145	.73	.541875	6.77	.458125	48
13	.517382	6.05	.975101	.73	.542281	6.78	.457719	47
14	.517745	6.03	.975057	.73	.542688	6.77	.457312	46
15	9.518107	6.02	9.975013	.73	9.543094	6.75	0.456906	45
16	.518468	6.02	.974969	.73	.543499	6.77	.456501	44
17	.518829	6.02	.974925	.75	.543905	6.75	.456095	43
18	.519190	6.02	.974880	.73	.544310	6.75	.455690	42
19	.519551	6.00	.974836	.73	.544715	6.73	.455285	41
20	9.519911	6.00	9.974792	.73	9.545119	6.75	0.454881	40
21	.520271	6.00	.974748	.75	.545524	6.73	.454476	39
22	.520631	5.98	.974703	.73	.545928	6.72	.454072	38
23	.520990	5.98	.974659	.75	.546331	6.73	.453669	37
24	.521349	5.97	.974614	.73	.546735	6.72	.453265	36
25	9.521707	5.98	9.974570	.75	9.547138	6.70	0.452862	35
26	.522066	5.97	.974525	.73	.547540	6.72	.452460	34
27	.522424	5.95	.974481	.75	.547943	6.70	.452057	33
28	.522781	5.95	.974436	.75	.548345	6.70	.451655	32
29	.523138	5.95	.974391	.73	.548747	6.70	.451253	31
30	9.523495	5.95	9.974347	.75	9.549149	6.68	0.450851	30
31	.523852	5.93	.974302	.75	.549550	6.68	.450450	29
32	.524208	5.93	.974257	.75	.549951	6.68	.450049	28
33	.524564	5.93	.974212	.75	.550352	6.67	.449648	27
34	.524920	5.92	.974167	.75	.550752	6.68	.449248	26
35	9.525275	5.92	9.974122	.75	9.551153	6.65	0.448847	25
36	.525630	5.90	.974077	.75	.551552	6.67	.448448	24
37	.525984	5.92	.974032	.75	.551952	6.65	.448048	23
38	.526339	5.90	.973987	.75	.552351	6.65	.447649	22
39	.526693	5.88	.973942	.75	.552750	6.65	.447250	21
40	9.527046	5.90	9.973897	.75	9.553149	6.65	0.446851	20
41	.527400	5.88	.973852	.75	.553548	6.63	.446452	19
42	.527753	5.87	.973807	.77	.553946	6.63	.446054	18
43	.528105	5.88	.973761	.75	.554344	6.62	.445656	17
44	.528458	5.87	.973716	.75	.554741	6.63	.445259	16
45	9.528810	5.85	9.973671	.77	9.555139	6.62	0.444861	15
46	.529161	5.87	.973625	.75	.555536	6.62	.444464	14
47	.529513	5.85	.973580	.75	.555933	6.60	.444067	13
48	.529864	5.85	.973535	.77	.556329	6.60	.443671	12
49	.530215	5.83	.973489	.75	.556725	6.60	.443275	11
50	9.530565	5.83	9.973444	.77	9.557121	6.60	0.442879	10
51	.530915	5.83	.973398	.77	.557517	6.60	.442483	9
52	.531265	5.82	.973352	.75	.557913	6.58	.442087	8
53	.531614	5.82	.973307	.77	.558308	6.58	.441692	7
54	.531963	5.82	.973261	.77	.558703	6.57	.441297	6
55	9.532312	5.82	9.973215	.77	9.559097	6.57	0.440903	5
56	.532661	5.80	.973169	.75	.559491	6.57	.440509	4
57	.533009	5.80	.973124	.77	.559885	6.57	.440115	3
58	.533357	5.78	.973078	.77	.560279	6.57	.439721	2
59	.533704	5.80	.973032	.77	.560673	6.55	.439327	1
60	9.534052		9.972986		9.561066		0.438934	0
	Cos.	D. 1″.	Sin.	D. 1″.	Cot.	D. 1″.	Tan.	

09°

TABLE 55. — *Continued*

LOGARITHMIC SINES, COSINES, TANGENTS, AND COTANGENTS

20° 159°

M.	Sin.	D. 1″.	Cos.	D. 1″.	Tan.	D. 1″.	Cot.	
0	9.534052	5.78	9.972986	.77	9.561066	6.55	0.438934	60
1	.534399	5.77	.972940	.77	.561459	6.53	.438541	59
2	.534745	5.78	.972894	.77	.561851	6.55	.438149	58
3	.535092	5.77	.972848	.77	.562244	6.53	.437756	57
4	.535438	5.75	.972802	.78	.562636	6.53	.437364	56
5	9.535783	5.77	9.972755	.77	9.563028	6.52	0.436972	55
6	.536129	5.75	.972709	.77	.563419	6.53	.436581	54
7	.536474	5.73	.972663	.77	.563811	6.52	.436189	53
8	.536818	5.75	.972617	.78	.564202	6.52	.435798	52
9	.537163	5.73	.972570	.77	.564593	6.50	.435407	51
10	9.537507	5.73	9.972524	.77	9.564983	6.50	0.435017	50
11	.537851	5.72	.972478	.78	.565373	6.50	.434627	49
12	.538194	5.73	.972431	.77	.565763	6.50	.434237	48
13	.538538	5.70	.972385	.78	.566153	6.48	.433847	47
14	.538880	5.72	.972338	.78	.566542	6.50	.433458	46
15	9.539223	5.70	9.972291	.77	9.566932	6.47	0.433068	45
16	.539565	5.70	.972245	.78	.567320	6.48	.432680	44
17	.539907	5.70	.972198	.78	.567709	6.48	.432291	43
18	.540249	5.68	.972151	.77	.568098	6.47	.431902	42
19	.540590	5.68	.972105	.78	.568486	6.45	.431514	41
20	9.540931	5.68	9.972058	.78	9.568873	6.47	0.431127	40
21	.541272	5.68	.972011	.78	.569261	6.45	.430739	39
22	.541613	5.67	.971964	.78	.569648	6.45	.430352	38
23	.541953	5.67	.971917	.78	.570035	6.45	.429965	37
24	.542293	5.65	.971870	.78	.570422	6.45	.429578	36
25	9.542632	5.65	9.971823	.78	9.570809	6.43	0.429191	35
26	.542971	5.65	.971776	.78	.571195	6.43	.428805	34
27	.543310	5.65	.971729	.78	.571581	6.43	.428419	33
28	.543649	5.63	.971682	.78	.571967	6.42	.428033	32
29	.543987	5.63	.971635	.78	.572352	6.43	.427648	31
30	9.544325	5.63	9.971588	.80	9.572738	6.42	0.427262	30
31	.544663	5.62	.971540	.78	.573123	6.40	.426877	29
32	.545000	5.63	.971493	.78	.573507	6.42	.426493	28
33	.545338	5.60	.971446	.80	.573892	6.40	.426108	27
34	.545674	5.62	.971398	.78	.574276	6.40	.425724	26
35	9.546011	5.60	9.971351	.80	9.574660	6.40	0.425340	25
36	.546347	5.60	.971303	.78	.575044	6.38	.424956	24
37	.546683	5.60	.971256	.80	.575427	6.38	.424573	23
38	.547019	5.58	.971208	.78	.575810	6.38	.424190	22
39	.547354	5.58	.971161	.80	.576193	6.38	.423807	21
40	9.547689	5.58	9.971113	.78	9.576576	6.38	0.423424	20
41	.548024	5.58	.971066	.80	.576959	6.37	.423041	19
42	.548359	5.57	.971018	.80	.577341	6.37	.422659	18
43	.548693	5.57	.970970	.80	.577723	6.35	.422277	17
44	.549027	5.55	.970922	.80	.578104	6.37	.421896	16
45	9.549360	5.55	9.970874	.78	9.578486	6.35	0.421514	15
46	.549693	5.55	.970827	.80	.578867	6.35	.421133	14
47	.550026	5.55	.970779	.80	.579248	6.35	.420752	13
48	.550359	5.55	.970731	.80	.579629	6.33	.420371	12
49	.550692	5.53	.970683	.80	.580009	6.33	.419991	11
50	9.551024	5.53	9.970635	.82	9.580389	6.33	0.419611	10
51	.551356	5.52	.970586	.80	.580769	6.33	.419231	9
52	.551687	5.52	.970538	.80	.581149	6.32	.418851	8
53	.552018	5.52	.970490	.80	.581528	6.32	.418472	7
54	.552349	5.52	.970442	.80	.581907	6.32	.418093	6
55	9.552680	5.50	9.970394	.82	9.582286	6.32	0.417714	5
56	.553010	5.52	.970345	.80	.582665	6.32	.417335	4
57	.553341	5.48	.970297	.80	.583044	6.30	.416956	3
58	.553670	5.50	.970249	.82	.583422	6.30	.416578	2
59	.554000	5.48	.970200	.80	.583800	6.28	.416200	1
60	9.554329		9.970152		9.584177		0.415823	0
	Cos.	D. 1″.	Sin.	D. 1″.	Cot.	D. 1″.	Tan.	M.

110° 69°

LOGARITHMIC SINES, COSINES, TANGENTS, AND COTANGENTS

21° 158°

M.	Sin.	D. 1″.	Cos.	D. 1″.	Tan.	D. 1″.	Cot.	
0	9.554329	5.48	9.970152	.82	9.584177	6.30	0.415823	60
1	.554658	5.48	.970103	.80	.584555	6.28	.415445	59
2	.554987	5.47	.970055	.82	.584932	6.28	.415068	58
3	.555315	5.47	.970006	.82	.585309	6.28	.414691	57
4	.555643	5.47	.969957	.80	.585686	6.27	.414314	56
5	9.555971	5.47	9.969909	.82	9.586062	6.28	0.413938	55
6	.556299	5.45	.969860	.82	.586439	6.27	.413561	54
7	.556626	5.45	.969811	.82	.586815	6.25	.413185	53
8	.556953	5.45	.969762	.80	.587190	6.27	.412810	52
9	.557280	5.43	.969714	.82	.587566	6.25	.412434	51
10	9.557606	5.43	9.969665	.82	9.587941	6.25	0.412059	50
11	.557932	5.43	.969616	.82	.588316	6.25	.411684	49
12	.558258	5.42	.969567	.82	.588691	6.25	.411309	48
13	.558583	5.43	.969518	.82	.589066	6.23	.410934	47
14	.558909	5.42	.969469	.82	.589440	6.23	.410560	46
15	9.559234	5.40	9.969420	.83	9.589814	6.23	0.410186	45
16	.559558	5.42	.969370	.82	.590188	6.23	.409812	44
17	.559883	5.40	.969321	.82	.590562	6.22	.409438	43
18	.560207	5.40	.969272	.82	.590935	6.22	.409065	42
19	.560531	5.40	.969223	.83	.591308	6.22	.408692	41
20	9.560855	5.38	9.969173	.82	9.591681	6.22	0.408319	40
21	.561178	5.38	.969124	.82	.592054	6.20	.407946	39
22	.561501	5.38	.969075	.83	.592426	6.22	.407574	38
23	.561824	5.37	.969025	.82	.592799	6.20	.407201	37
24	.562146	5.37	.968976	.83	.593171	6.18	.406829	36
25	9.562468	5.37	9.968926	.82	9.593542	6.20	0.406458	35
26	.562790	5.37	.968877	.83	.593914	6.18	.406086	34
27	.563112	5.35	.968827	.83	.594285	6.18	.405715	33
28	.563433	5.37	.968777	.82	.594656	6.18	.405344	32
29	.563755	5.33	.968728	.83	.595027	6.18	.404973	31
30	9.564075	5.35	9.968678	.83	9.595398	6.17	0.404602	30
31	.564396	5.33	.968628	.83	.595768	6.17	.404232	29
32	.564716	5.33	.968578	.83	.596138	6.17	.403862	28
33	.565036	5.33	.968528	.82	.596508	6.17	.403492	27
34	.565356	5.33	.968479	.83	.596878	6.15	.403122	26
35	9.565676	5.32	9.968429	.83	9.597247	6.15	0.402753	25
36	.565995	5.32	.968379	.83	.597616	6.15	.402384	24
37	.566314	5.30	.968329	.85	.597985	6.15	.402015	23
38	.566632	5.32	.968278	.83	.598354	6.13	.401646	22
39	.566951	5.30	.968228	.83	.598722	6.15	.401278	21
40	9.567269	5.30	9.968178	.83	9.599091	6.13	0.400909	20
41	.567587	5.28	.968128	.83	.599459	6.13	.400541	19
42	.567904	5.30	.968078	.85	.599827	6.12	.400173	18
43	.568222	5.28	.968027	.83	.600194	6.13	.399806	17
44	.568539	5.28	.967977	.83	.600562	6.12	.399438	16
45	9.568856	5.27	9.967927	.85	9.600929	6.12	0.399071	15
46	.569172	5.27	.967876	.83	.601296	6.12	.398704	14
47	.569488	5.27	.967826	.85	.601663	6.10	.398337	13
48	.569804	5.27	.967775	.83	.602029	6.10	.397971	12
49	.570120	5.25	.967725	.85	.602395	6.10	.397605	11
50	9.570435	5.27	9.967674	.83	9.602761	6.10	0.397239	10
51	.570751	5.25	.967624	.85	.603127	6.10	.396873	9
52	.571066	5.23	.967573	.85	.603493	6.08	.396507	8
53	.571380	5.25	.967522	.85	.603858	6.08	.396142	7
54	.571695	5.23	.967471	.83	.604223	6.08	.395777	6
55	9.572009	5.23	9.967421	.85	9.604588	6.08	0.395412	5
56	.572323	5.22	.967370	.85	.604953	6.07	.395047	4
57	.572636	5.23	.967319	.85	.605317	6.08	.394683	3
58	.572950	5.22	.967268	.85	.605682	6.07	.394318	2
59	.573263	5.20	.967217	.85	.606046	6.07	.393954	1
60	9.573575		9.967166		9.606410		0.393590	0
	Cos.	D. 1″.	Sin.	D. 1″.	Cot.	D. 1″.	Tan.	M.

111° 69°

TABLE 55. — *Continued*

LOGARITHMIC SINES, COSINES, TANGENTS, AND COTANGENTS

22° 157°

M.	Sin.	D. 1″.	Cos.	D. 1″.	Tan.	D. 1″.	Cot.	
0	9.573575	5.22	9.967166	.85	9.606410	6.05	0.393590	60
1	.573888	5.20	.967115	.85	.606773	6.07	.393227	59
2	.574200	5.20	.967064	.85	.607137	6.05	.392863	58
3	.574512	5.20	.967013	.87	.607500	6.05	.392500	57
4	.574824	5.20	.966961	.85	.607863	6.03	.392137	56
5	9.575136	5.18	9.966910	.85	9.608225	6.05	0.391775	55
6	.575447	5.18	.966859	.85	.608588	6.03	.391412	54
7	.575758	5.18	.966808	.87	.608950	6.03	.391050	53
8	.576069	5.17	.966756	.85	.609312	6.03	.390688	52
9	.576379	5.17	.966705	.87	.609674	6.03	.390326	51
10	9.576689	5.17	9.966653	.85	9.610036	6.02	0.389964	50
11	.576999	5.17	.966602	.87	.610397	6.03	.389603	49
12	.577309	5.15	.966550	.85	.610759	6.02	.389241	48
13	.577618	5.15	.966499	.87	.611120	6.00	.388880	47
14	.577927	5.15	.966447	.87	.611480	6.02	.388520	46
15	9.578236	5.15	9.966395	.85	9.611841	6.00	0.388159	45
16	.578545	5.13	.966344	.87	.612201	6.00	.387799	44
17	.578853	5.15	.966292	.87	.612561	6.00	.387439	43
18	.579162	5.13	.966240	.87	.612921	6.00	.387079	42
19	.579470	5.12	.966188	.87	.613281	6.00	.386719	41
20	9.579777	5.13	9.966136	.85	9.613641	5.98	0.386359	40
21	.580085	5.12	.966085	.87	.614000	5.98	.386000	39
22	.580392	5.12	.966033	.87	.614359	5.98	.385641	38
23	.580699	5.10	.965981	.87	.614718	5.98	.385282	37
24	.581005	5.12	.965929	.88	.615077	5.97	.384923	36
25	9.581312	5.10	9.965876	.87	9.615435	5.97	0.384565	35
26	.581618	5.10	.965824	.87	.615793	5.97	.384207	34
27	.581924	5.08	.965772	.87	.616151	5.97	.383849	33
28	.582229	5.10	.965720	.87	.616509	5.97	.383491	32
29	.582535	5.08	.965668	.88	.616867	5.95	.383133	31
30	9.582840	5.08	9.965615	.87	9.617224	5.97	0.382776	30
31	.583145	5.07	.965563	.87	.617582	5.95	.382418	29
32	.583449	5.08	.965511	.88	.617939	5.93	.382061	28
33	.583754	5.07	.965458	.87	.618295	5.95	.381705	27
34	.584058	5.05	.965406	.88	.618652	5.93	.381348	26
35	9.584361	5.07	9.965353	.87	9.619008	5.93	0.380992	25
36	.584665	5.05	.965301	.88	.619364	5.93	.380636	24
37	.584968	5.07	.965248	.88	.619720	5.93	.380280	23
38	.585272	5.03	.965195	.87	.620076	5.93	.379924	22
39	.585574	5.05	.965143	.88	.620432	5.92	.379568	21
40	9.585877	5.03	9.965090	.88	9.620787	5.92	0.379213	20
41	.586179	5.05	.965037	.88	.621142	5.92	.378858	19
42	.586482	5.02	.964984	.88	.621497	5.92	.378503	18
43	.586783	5.03	.964931	.87	.621852	5.92	.378148	17
44	.587085	5.02	.964879	.88	.622207	5.90	.377793	16
45	9.587386	5.03	9.964826	.88	9.622561	5.90	0.377439	15
46	.587688	5.02	.964773	.88	.622915	5.90	.377085	14
47	.587989	5.00	.964720	.90	.623269	5.90	.376731	13
48	.588289	5.02	.964666	.88	.623623	5.88	.376377	12
49	.588590	5.00	.964613	.88	.623976	5.90	.376024	11
50	9.588890	5.00	9.964560	.88	9.624330	5.88	0.375670	10
51	.589190	4.98	.964507	.88	.624683	5.88	.375317	9
52	.589489	5.00	.964454	.90	.625036	5.87	.374964	8
53	.589789	4.98	.964400	.88	.625388	5.88	.374612	7
54	.590088	4.98	.964347	.88	.625741	5.87	.374259	6
55	9.590387	4.98	9.964294	.90	9.626093	5.87	0.373907	5
56	.590686	4.97	.964240	.88	.626445	5.87	.373555	4
57	.590984	4.97	.964187	.90	.626797	5.87	.373203	3
58	.591282	4.97	.964133	.88	.627149	5.87	.372851	2
59	.591580	4.97	.964080	.90	.627501	5.85	.372499	1
60	9.591878		9.964026		9.627852		0.372148	0
	Cos.	D. 1″.	Sin.	D. 1″.	Cot.	D. 1″.	Tan.	M.

112° 67°

TABLE 55. — *Continued*

LOGARITHMIC SINES, COSINES, TANGENTS, AND COTANGENTS

23° 156°

M.	Sin.	D. 1″.	Cos.	D. 1″.	Tan.	D. 1″.	Cot.	
0	9.591878	4.97	9.964026	.90	9.627852	5.85	0.372148	60
1	.592176	4.95	.963972	.88	.628203	5.85	.371797	59
2	.592473	4.95	.963919	.90	.628554	5.85	.371446	58
3	.592770	4.95	.963865	.90	.628905	5.83	.371095	57
4	.593067	4.93	.963811	.90	.629255	5.85	.370745	56
5	9.593363	4.93	9.963757	.88	9.629606	5.83	0.370394	55
6	.593659	4.93	.963704	.90	.629956	5.83	.370044	54
7	.593955	4.93	.963650	.90	.630306	5.83	.369694	53
8	.594251	4.93	.963596	.90	.630656	5.82	.369344	52
9	.594547	4.92	.963542	.90	.631005	5.83	.368995	51
10	9.594842	4.92	9.963488	.90	9.631355	5.82	0.368645	50
11	.595137	4.92	.963434	.92	.631704	5.82	.368296	49
12	.595432	4.92	.963379	.90	.632053	5.82	.367947	48
13	.595727	4.90	.963325	.90	.632402	5.80	.367598	47
14	.596021	4.90	.963271	.90	.632750	5.82	.367250	46
15	9.596315	4.90	9.963217	.90	9.633099	5.80	0.366901	45
16	.596609	4.90	.963163	.92	.633447	5.80	.366553	44
17	.596903	4.88	.963108	.90	.633795	5.80	.366205	43
18	.597196	4.90	.963054	.92	.634143	5.78	.365857	42
19	.597490	4.88	.962999	.90	.634490	5.80	.365510	41
20	9.597783	4.87	9.962945	.92	9.634838	5.78	0.365162	40
21	.598075	4.88	.962890	.90	.635185	5.78	.364815	39
22	.598368	4.87	.962836	.92	.635532	5.78	.364468	38
23	.598660	4.87	.962781	.90	.635879	5.78	.364121	37
24	.598952	4.87	.962727	.92	.636226	5.77	.363774	36
25	9.599244	4.87	9.962672	.92	9.636572	5.78	0.363428	35
26	.599536	4.85	.962617	.92	.636919	5.77	.363081	34
27	.599827	4.85	.962562	.90	.637265	5.77	.362735	33
28	.600118	4.85	.962508	.92	.637611	5.76	.362389	32
29	.600409	4.85	.962453	.92	.637956	5.77	.362044	31
30	9.600700	4.83	9.962398	.92	9.638302	5.75	0.361698	30
31	.600990	4.83	.962343	.92	.638647	5.75	.361353	29
32	.601280	4.83	.962288	.92	.638992	5.75	.361008	28
33	.601570	4.83	.962233	.92	.639337	5.75	.360663	27
34	.601860	4.83	.962178	.92	.639682	5.75	.360318	26
35	9.602150	4.82	9.962123	.93	9.640027	5.73	0.359973	25
36	.602439	4.82	.962067	.92	.640371	5.75	.359629	24
37	.602728	4.82	.962012	.92	.640716	5.73	.359284	23
38	.603017	4.80	.961957	.92	.641060	5.73	.358940	22
39	.603305	4.82	.961902	.93	.641404	5.72	.358596	21
40	9.603594	4.80	9.961846	.92	9.641747	5.73	0.358253	20
41	.603882	4.80	.961791	.93	.642091	5.72	.357909	19
42	.604170	4.78	.961735	.92	.642434	5.72	.357566	18
43	.604457	4.80	.961680	.93	.642777	5.72	.357223	17
44	.604745	4.78	.961624	.92	.643120	5.72	.356880	16
45	9.605032	4.78	9.961569	.93	9.643463	5.72	0.356537	15
46	.605319	4.78	.961513	.92	.643806	5.70	.356194	14
47	.605606	4.77	.961458	.93	.644148	5.70	.355852	13
48	.605892	4.78	.961402	.93	.644490	5.70	.355510	12
49	.606179	4.77	.961346	.93	.644832	5.70	.355168	11
50	9.606465	4.77	9.961290	.92	9.645174	5.70	0.354826	10
51	.606751	4.75	.961235	.93	.645516	5.68	.354484	9
52	.607036	4.77	.961179	.93	.645857	5.70	.354143	8
53	.607322	4.75	.961123	.93	.646199	5.68	.353801	7
54	.607607	4.75	.961067	.93	.646540	5.68	.353460	6
55	9.607892	4.75	9.961011	.93	9.646881	5.68	0.353119	5
56	.608177	4.73	.960955	.93	.647222	5.67	.352778	4
57	.608461	4.73	.960899	.93	.647562	5.68	.352438	3
58	.608745	4.73	.960843	.95	.647903	5.67	.352097	2
59	.609029	4.73	.960786	.93	.648243	5.67	.351757	1
60	9.609313		9.960730		9.648583		0.351417	0
	Cos.	D. 1″.	Sin.	D. 1″.	Cot.	D. 1″.	Tan.	M.

113° 6

TABLE 55. — *Continued*

LOGARITHMIC SINES, COSINES, TANGENTS, AND COTANGENTS

24° 155°

M.	Sin.	D. 1″.	Cos.	D. 1″.	Tan.	D. 1″.	Cot.	
0	9.609313	4.73	9.960730	.93	9.648583	5.67	0.351417	60
1	.609597	4.72	.960674	.93	.648923	5.67	.351077	59
2	.609880	4.73	.960618	.95	.649263	5.65	.350737	58
3	.610164	4.72	.960561	.93	.649602	5.67	.350398	57
4	.610447	4.70	.960505	.95	.649942	5.65	.350058	56
5	9.610729	4.72	9.960448	.93	9.650281	5.65	0.349719	55
6	.611012	4.70	.960392	.95	.650620	5.65	.349380	54
7	.611294	4.70	.960335	.93	.650959	5.63	.349041	53
8	.611576	4.70	.960279	.95	.651297	5.65	.348703	52
9	.611858	4.70	.960222	.95	.651636	5.63	.348364	51
10	9.612140	4.68	9.960165	.93	9.651974	5.63	0.348026	50
11	.612421	4.68	.960109	.95	.652312	5.63	.347688	49
12	.612702	4.68	.960052	.95	.652650	5.63	.347350	48
13	.612983	4.68	.959995	.95	.652988	5.63	.347012	47
14	.613264	4.68	.959938	.93	.653326	5.62	.346674	46
15	9.613545	4.67	9.959882	.95	9.653663	5.62	0.346337	45
16	.613825	4.67	.959825	.95	.654000	5.62	.346000	44
17	.614105	4.67	.959768	.95	.654337	5.62	.345663	43
18	.614385	4.67	.959711	.95	.654674	5.62	.345326	42
19	.614665	4.65	.959654	.97	.655011	5.62	.344989	41
20	9.614944	4.65	9.959596	.95	9.655348	5.60	0.344652	40
21	.615223	4.65	.959539	.95	.655684	5.60	.344316	39
22	.615502	4.65	.959482	.95	.656020	5.60	.343980	38
23	.615781	4.65	.959425	.95	.656356	5.60	.343644	37
24	.616060	4.63	.959368	.97	.656692	5.60	.343308	36
25	9.616338	4.63	9.959310	.95	9.657028	5.60	0.342972	35
26	.616616	4.63	.959253	.97	.657364	5.58	.342636	34
27	.616894	4.63	.959195	.95	.657699	5.58	.342301	33
28	.617172	4.63	.959138	.97	.658034	5.58	.341966	32
29	.617450	4.62	.959080	.95	.658369	5.58	.341631	31
30	9.617727	4.62	9.959023	.97	9.658704	5.58	0.341296	30
31	.618004	4.62	.958965	.95	.659039	5.57	.340961	29
32	.618281	4.62	.958908	.97	.659373	5.58	.340627	28
33	.618558	4.60	.958850	.97	.659708	5.57	.340292	27
34	.618834	4.60	.958792	.97	.660042	5.57	.339958	26
35	9.619110	4.60	9.958734	.95	9.660376	5.57	0.339624	25
36	.619386	4.60	.958677	.97	.660710	5.55	.339290	24
37	.619662	4.60	.958619	.97	.661043	5.57	.338957	23
38	.619938	4.58	.958561	.97	.661377	5.55	.338623	22
39	.620213	4.58	.958503	.97	.661710	5.55	.338290	21
40	9.620488	4.58	9.958445	.97	9.662043	5.55	0.337957	20
41	.620763	4.58	.958387	.97	.662376	5.55	.337624	19
42	.621038	4.58	.958329	.97	.662709	5.55	.337291	18
43	.621313	4.57	.958271	.97	.663042	5.55	.336958	17
44	.621587	4.57	.958213	.98	.663375	5.53	.336625	16
45	9.621861	4.57	9.958154	.97	9.663707	5.53	0.336293	15
46	.622135	4.57	.958096	.97	.664039	5.53	.335961	14
47	.622409	4.55	.958038	.98	.664371	5.53	.335629	13
48	.622682	4.57	.957979	.97	.664703	5.53	.335297	12
49	.622956	4.55	.957921	.97	.665035	5.52	.334965	11
50	9.623229	4.55	9.957863	.98	9.665366	5.53	0.334634	10
51	.623502	4.53	.957804	.97	.665698	5.52	.334302	9
52	.623774	4.55	.957746	.98	.666029	5.52	.333971	8
53	.624047	4.53	.957687	.98	.666360	5.52	.333640	7
54	.624319	4.53	.957628	.97	.666691	5.50	.333309	6
55	9.624591	4.53	9.957570	.98	9.667021	5.52	0.332979	5
56	.624863	4.53	.957511	.98	.667352	5.50	.332648	4
57	.625135	4.52	.957452	.98	.667682	5.52	.332318	3
58	.625406	4.52	.957393	.97	.668013	5.50	.331987	2
59	.625677	4.52	.957335	.98	.668343	5.50	.331657	1
60	9.625948		9.957276		9.668673		0.331327	0
	Cos.	*D. 1″.*	Sin.	D. 1″.	Cot.	D. 1″.	Tan.	M.

114° 65°

TABLE 55. — *Continued*

LOGARITHMIC SINES, COSINES, TANGENTS, AND COTANGENTS

M.	Sin.	D. 1″.	Cos.	D. 1″.	Tan.	D. 1″.	Cot.	
0	9.625948	4.52	9.957276	.98	9.668673	5.48	0.331327	60
1	.626219	4.52	.957217	.98	.669002	5.50	.330998	59
2	.626490	4.50	.957158	.98	.669332	5.48	.330668	58
3	.626760	4.50	.957099	.98	.669661	5.50	.330339	57
4	.627030	4.50	.957040	.98	.669991	5.48	.330009	56
5	9.627300	4.50	9.956981	1.00	9.670320	5.48	0.329680	55
6	.627570	4.50	.956921	.98	.670649	5.47	.329351	54
7	.627840	4.48	.956862	.98	.670977	5.48	.329023	53
8	.628109	4.48	.956803	.98	.671306	5.48	.328694	52
9	.628378	4.48	.956744	1.00	.671635	5.47	.328365	51
10	9.628647	4.48	9.956684	.98	9.671963	5.47	0.328037	50
11	.628916	4.48	.956625	.98	.672291	5.47	.327709	49
12	.629185	4.47	.956566	1.00	.672619	5.47	.327381	48
13	.629453	4.47	.956506	.98	.672947	5.45	.327053	47
14	.629721	4.47	.956447	1.00	.673274	5.47	.326726	46
15	9.629989	4.47	9.956387	1.00	9.673602	5.45	0.326398	45
16	.630257	4.45	.956327	.98	.673929	5.47	.326071	44
17	.630524	4.47	.956268	1.00	.674257	5.45	.325743	43
18	.630792	4.45	.956208	1.00	.674584	5.45	.325416	42
19	.631059	4.45	.956148	.98	.674911	5.43	.325089	41
20	9.631326	4.45	9.956089	1.00	9.675237	5.45	0.324763	40
21	.631593	4.43	.956029	1.00	.675564	5.43	.324436	39
22	.631859	4.43	.955969	1.00	.675890	5.45	.324110	38
23	.632125	4.45	.955909	1.00	.676217	5.43	.323783	37
24	.632392	4.43	.955849	1.00	.676543	5.43	.323457	36
25	9.632658	4.42	9.955789	1.00	9.676869	5.42	0.323131	35
26	.632923	4.43	.955729	1.00	.677194	5.43	.322806	34
27	.633189	4.42	.955669	1.00	.677520	5.43	.322480	33
28	.633454	4.42	.955609	1.02	.677846	5.42	.322154	32
29	.633719	4.42	.955548	1.00	.678171	5.42	.321829	31
30	9.633984	4.42	9.955488	1.00	9.678496	5.42	0.321504	30
31	.634249	4.42	.955428	1.00	.678821	5.42	.321179	29
32	.634514	4.40	.955368	1.02	.679146	5.42	.320854	28
33	.634778	4.40	.955307	1.00	.679471	5.40	.320529	27
34	.635042	4.40	.955247	1.02	.679795	5.42	.320205	26
35	9.635306	4.40	9.955186	1.00	9.680120	5.40	0.319880	25
36	.635570	4.40	.955126	1.02	.680444	5.40	.319556	24
37	.635834	4.38	.955065	1.00	.680768	5.40	.319232	23
38	.636097	4.38	.955005	1.02	.681092	5.40	.318908	22
39	.636360	4.38	.954944	1.02	.681416	5.40	.318584	21
40	9.636623	4.38	9.954883	1.00	9.681740	5.38	0.318260	20
41	.636886	4.37	.954823	1.02	.682063	5.40	.317937	19
42	.637148	4.38	.954762	1.02	.682387	5.38	.317613	18
43	.637411	4.37	.954701	1.02	.682710	5.38	.317290	17
44	.637673	4.37	.954640	1.02	.683033	5.38	.316967	16
45	9.637935	4.37	9.954579	1.02	9.683356	5.38	0.316644	15
46	.638197	4.35	.954518	1.02	.683679	5.37	.316321	14
47	.638458	4.37	.954457	1.02	.684001	5.38	.315999	13
48	.638720	4.35	.954396	1.02	.684324	5.37	.315676	12
49	.638981	4.35	.954335	1.02	.684646	5.37	.315354	11
50	9.639242	4.35	9.954274	1.02	9.684968	5.37	0.315032	10
51	.639503	4.35	.954213	1.02	.685290	5.37	.314710	9
52	.639764	4.33	.954152	1.03	.685612	5.37	.314388	8
53	.640024	4.33	.954090	1.02	.685934	5.35	.314066	7
54	.640284	4.33	.954029	1.02	.686255	5.37	.313745	6
55	9.640544	4.33	9.953968	1.03	9.686577	5.35	0.313423	5
56	.640804	4.33	.953906	1.02	.686898	5.35	.313102	4
57	.641064	4.33	.953845	1.03	.687219	5.35	.312781	3
58	.641324	4.32	.953783	1.02	.687540	5.35	.312460	2
59	.641583	4.32	.953722	1.03	.687861	5.35	.312139	1
60	9.641842		9.953660		9.688182		0.311818	0
	Cos.	D. 1″.	Sin.	D. 1″.	Cot.	D. 1″.	Tan.	

TABLE 55. — *Continued*

LOGARITHMIC SINES, COSINES, TANGENTS, AND COTANGENTS

26°

M.	Sin.	D. 1″.	Cos.	D. 1″.	Tan.	D. 1″.	Cot.	
0	9.641842	4.32	9.953660	1.02	9.688182	5.33	0.311818	
1	.642101	4.32	.953599	1.03	.688502	5.35	.311498	
2	.642360	4.30	.953537	1.03	.688823	5.33	.311177	
3	.642618	4.32	.953475	1.03	.689143	5.33	.310857	
4	.642877	4.30	.953413	1.02	.689463	5.33	.310537	
5	9.643135	4.30	9.953352	1.03	9.689783	5.33	0.310217	
6	.643393	4.28	.953290	1.03	.690103	5.33	.309897	
7	.643650	4.30	.953228	1.03	.690423	5.32	.309577	
8	.643908	4.28	.953166	1.03	.690742	5.33	.309258	
9	.644165	4.30	.953104	1.03	.691062	5.32	.308938	
10	9.644423	4.28	9.953042	1.03	9.691381	5.32	0.308619	
11	.644680	4.27	.952980	1.03	.691700	5.32	.308300	
12	.644936	4.28	.952918	1.05	.692019	5.32	.307981	
13	.645193	4.28	.952855	1.03	.692338	5.30	.307662	
14	.645450	4.27	.952793	1.03	.692656	5.32	.307344	
15	9.645706	4.27	9.952731	1.03	9.692975	5.30	0.307025	
16	.645962	4.27	.952669	1.05	.693293	5.32	.306707	44
17	.646218	4.27	.952606	1.03	.693612	5.30	.306388	43
18	.646474	4.25	.952544	1.05	.693930	5.30	.306070	42
19	.646729	4.25	.952481	1.03	.694248	5.30	.305752	41
20	9.646984	4.27	9.952419	1.05	9.694566	5.28	0.305434	40
21	.647240	4.23	.952356	1.03	.694883	5.30	.305117	39
22	.647494	4.25	.952294	1.05	.695201	5.28	.304799	38
23	.647749	4.25	.952231	1.05	.695518	5.30	.304482	37
24	.648004	4.23	.952168	1.03	.695836	5.28	.304164	36
25	9.648258	4.23	9.952106	1.05	9.696153	5.28	0.303847	35
26	.648512	4.23	.952043	1.05	.696470	5.28	.303530	34
27	.648766	4.23	.951980	1.05	.696787	5.27	.303213	33
28	.649020	4.23	.951917	1.05	.697103	5.28	.302897	32
29	.649274	4.22	.951854	1.05	.697420	5.27	.302580	31
30	9.649527	4.23	9.951791	1.05	9.697736	5.28	0.302264	30
31	.649781	4.22	.951728	1.05	.698053	5.27	.301947	29
32	.650034	4.22	.951665	1.05	.698369	5.27	.301631	28
33	.650287	4.20	.951602	1.05	.698685	5.27	.301315	27
34	.650539	4.22	.951539	1.05	.699001	5.25	.300999	26
35	9.650792	4.20	9.951476	1.07	9.699316	5.27	0.300684	25
36	.651044	4.22	.951412	1.05	.699632	5.25	.300368	24
37	.651297	4.20	.951349	1.05	.699947	5.27	.300053	23
38	.651549	4.18	.951286	1.07	.700263	5.25	.299737	22
39	.651800	4.20	.951222	1.05	.700578	5.25	.299422	21
40	9.652052	4.20	9.951159	1.05	9.700893	5.25	0.299107	20
41	.652304	4.18	.951096	1.07	.701208	5.25	.298792	19
42	.652555	4.18	.951032	1.07	.701523	5.23	.298477	18
43	.652806	4.18	.950968	1.05	.701837	5.25	.298163	17
44	.653057	4.18	.950905	1.07	.702152	5.23	.297848	16
45	9.653308	4.17	9.950841	1.05	9.702466	5.25	0.297534	15
46	.653558	4.17	.950778	1.07	.702781	5.23	.297219	14
47	.653808	4.18	.950714	1.07	.703095	5.23	.296905	13
48	.654059	4.17	.950650	1.07	.703409	5.22	.296591	12
49	.654309	4.15	.950586	1.07	.703722	5.23	.296278	11
50	9.654558	4.17	9.950522	1.07	9.704036	5.23	0.295964	10
51	.654808	4.17	.950458	1.07	.704350	5.22	.295650	9
52	.655058	4.15	.950394	1.07	.704663	5.22	.295337	8
53	.655307	4.15	.950330	1.07	.704976	5.23	.295024	7
54	.655556	4.15	.950266	1.07	.705290	5.22	.294710	6
55	9.655805	4.15	9.950202	1.07	9.705603	5.22	0.294397	5
56	.656054	4.13	.950138	1.07	.705916	5.20	.294084	4
57	.656302	4.15	.950074	1.07	.706228	5.22	.293772	3
58	.656551	4.13	.950010	1.08	.706541	5.22	.293459	2
59	.656799	4.13	.949945	1.07	.706854	5.20	.293146	1
60	9.657047		9.949881		9.707166		0.292834	0
	Cos.	*D. 1″.*	Sin.	D. 1″.	Cot.	D. 1″.	Tan.	M.

63° 63

TABLE 55. — *Continued*

LOGARITHMIC SINES, COSINES, TANGENTS, AND COTANGENTS

27° 152°

M.	Sin.	D. 1″.	Cos.	D. 1″.	Tan.	D. 1″.	Cot.	
0	9.657047	4.13	9.949881	1.08	9.707166	5.20	0.292834	60
1	.657295	4.12	.949816	1.07	.707478	5.20	.292522	59
2	.657542	4.13	.949752	1.07	.707790	5.20	.292210	58
3	.657790	4.12	.949688	1.08	.708102	5.20	.291898	57
4	.658037	4.12	.949623	1.08	.708414	5.20	.291586	56
5	9.658284	4.12	9.949559	1.07	9.708726	5.18	0.291274	55
6	.658531	4.12	.949494	1.08	.709037	5.20	.290963	54
7	.658778	4.12	.949429	1.08	.709349	5.18	.290651	53
8	.659025	4.10	.949364	1.07	.709660	5.18	.290340	52
9	.659271	4.10	.949300	1.08	.709971	5.18	.290029	51
10	9.659517	4.10	9.949235	1.08	9.710282	5.18	0.289718	50
11	.659763	4.10	.949170	1.08	.710593	5.18	.289407	49
12	.660009	4.10	.949105	1.08	.710904	5.18	.289096	48
13	.660255	4.10	.949040	1.08	.711215	5.17	.288785	47
14	.660501	4.08	.948975	1.08	.711525	5.18	.288475	46
15	9.660746	4.08	9.948910	1.08	9.711836	5.17	0.288164	45
16	.660991	4.08	.948845	1.08	.712146	5.17	.287854	44
17	.661236	4.08	.948780	1.08	.712456	5.17	.287544	43
18	.661481	4.08	.948715	1.10	.712766	5.17	.287234	42
19	.661726	4.07	.948650	1.08	.713076	5.17	.286924	41
20	9.661970	4.07	9.948584	1.08	9.713386	5.17	0.286614	40
21	.662214	4.08	.948519	1.10	.713696	5.15	.286304	39
22	.662459	4.07	.948454	1.08	.714005	5.15	.285995	38
23	.662703	4.05	.948388	1.10	.714314	5.17	.285686	37
24	.662946	4.07	.948323	1.10	.714624	5.15	.285376	36
25	9.663190	4.05	9.948257	1.08	9.714933	5.15	0.285067	35
26	.663433	4.07	.948192	1.10	.715242	5.15	.284758	34
27	.663677	4.05	.948126	1.10	.715551	5.15	.284449	33
28	.663920	4.05	.948060	1.08	.715860	5.13	.284140	32
29	.664163	4.05	.947995	1.10	.716168	5.15	.283832	31
30	9.664406	4.03	9.947929	1.10	9.716477	5.13	0.283523	30
31	.664648	4.05	.947863	1.10	.716785	5.13	.283215	29
32	.664891	4.03	.947797	1.10	.717093	5.13	.282907	28
33	.665133	4.03	.947731	1.10	.717401	5.13	.282599	27
34	.665375	4.03	.947665	1.08	.717709	5.13	.282291	26
35	9.665617	4.03	9.947600	1.12	9.718017	5.13	0.281983	25
36	.665859	4.02	.947533	1.10	.718325	5.13	.281675	24
37	.666100	4.03	.947467	1.10	.718633	5.12	.281367	23
38	.666342	4.02	.947401	1.10	.718940	5.13	.281060	22
39	.666583	4.02	.947335	1.10	.719248	5.12	.280752	21
40	9.666824	4.02	9.947269	1.10	9.719555	5.12	0.280445	20
41	.667065	4.00	.947203	1.12	.719862	5.12	.280138	19
42	.667305	4.02	.947136	1.10	.720169	5.12	.279831	18
43	.667546	4.00	.947070	1.10	.720476	5.12	.279524	17
44	.667786	4.02	.947004	1.12	.720783	5.10	.279217	16
45	9.668027	4.00	9.946937	1.10	9.721089	5.12	0.278911	15
46	.668267	3.98	.946871	1.12	.721396	5.10	.278604	14
47	.668506	4.00	.946804	1.10	.721702	5.12	.278298	13
48	.668746	4.00	.946738	1.12	.722009	5.10	.277991	12
49	.668986	3.98	.946671	1.12	.722315	5.10	.277685	11
50	9.669225	3.98	9.946604	1.10	9.722621	5.10	0.277379	10
51	.669464	3.98	.946538	1.12	.722927	5.08	.277073	9
52	.669703	3.98	.946471	1.12	.723232	5.10	.276768	8
53	.669942	3.98	.946404	1.12	.723538	5.10	.276462	7
54	.670181	3.97	.946337	1.12	.723844	5.08	.276156	6
55	9.670419	3.98	9.946270	1.12	9.724149	5.08	0.275851	5
56	.670658	3.97	.946203	1.12	.724454	5.10	.275546	4
57	.670896	3.97	.946136	1.12	.724760	5.08	.275240	3
58	.671134	3.97	.946069	1.12	.725065	5.08	.274935	2
59	.671372	3.95	.946002	1.12	.725370	5.07	.274630	1
60	9.671609		9.945935		9.725674		0.274326	0
	Cos.	D. 1″.	Sin.	D. 1″.	Cot.	D. 1″.	Tan.	M.

117°

TABLE 55. — *Continued*

LOGARITHMIC SINES, COSINES, TANGENTS, AND COTANGENTS

28° 151°

M.	Sin.	D. 1″.	Cos.	D. 1″.	Tan.	D. 1″.	Cot.	
0	9.671609	3.97	9.945935	1.12	9.725674	5.08	0.274326	60
1	.671847	3.95	.945868	1.13	.725979	5.08	.274021	59
2	.672084	3.95	.945800	1.12	.726284	5.07	.273716	58
3	.672321	3.95	.945733	1.12	.726588	5.07	.273412	57
4	.672558	3.95	.945666	1.13	.726892	5.08	.273108	56
5	9.672795	3.95	9.945598	1.12	9.727197	5.07	0.272803	55
6	.673032	3.93	.945531	1.12	.727501	5.07	.272499	54
7	.673268	3.95	.945464	1.13	.727805	5.07	.272195	53
8	.673505	3.93	.945396	1.13	.728109	5.05	.271891	52
9	.673741	3.93	.945328	1.12	.728412	5.07	.271588	51
10	9.673977	3.93	9.945261	1.13	9.728716	5.07	0.271284	50
11	.674213	3.92	.945193	1.13	.729020	5.05	.270980	49
12	.674448	3.93	.945125	1.12	.729323	5.05	.270677	48
13	.674684	3.92	.945058	1.13	.729626	5.05	.270374	47
14	.674919	3.93	.944990	1.13	.729929	5.07	.270071	46
15	9.675155	3.92	9.944922	1.13	9.730233	5.03	0.269767	45
16	.675390	3.90	.944854	1.13	.730535	5.05	.269465	44
17	.675624	3.92	.944786	1.13	.730838	5.05	.269162	43
18	.675859	3.92	.944718	1.13	.731141	5.05	.268859	42
19	.676094	3.90	.944650	1.13	.731444	5.03	.268556	41
20	9.676328	3.90	9.944582	1.13	9.731746	5.05	0.268254	40
21	.676562	3.90	.944514	1.13	.732048	5.03	.267952	39
22	.676796	3.90	.944446	1.15	.732351	5.03	.267649	38
23	.677030	3.90	.944377	1.13	.732653	5.03	.267347	37
24	.677264	3.90	.944309	1.13	.732955	5.03	.267045	36
25	9.677498	3.88	9.944241	1.15	9.733257	5.02	0.266743	35
26	.677731	3.88	.944172	1.13	.733558	5.03	.266442	34
27	.677964	3.88	.944104	1.13	.733860	5.03	.266140	33
28	.678197	3.88	.944036	1.15	.734162	5.02	.265838	32
29	.678430	3.88	.943967	1.13	.734463	5.02	.265537	31
30	9.678663	3.87	9.943899	1.15	9.734764	5.03	0.265236	30
31	.678895	3.88	.943830	1.15	.735066	5.02	.264934	29
32	.679128	3.87	.943761	1.13	.735367	5.02	.264633	28
33	.679360	3.87	.943693	1.15	.735668	5.02	.264332	27
34	.679592	3.87	.943624	1.15	.735969	5.00	.264031	26
35	9.679824	3.87	9.943555	1.15	9.736269	5.02	0.263731	25
36	.680056	3.87	.943486	1.15	.736570	5.00	.263430	24
37	.680288	3.85	.943417	1.15	.736870	5.02	.263130	23
38	.680519	3.85	.943348	1.15	.737171	5.00	.262829	22
39	.680750	3.87	.943279	1.15	.737471	5.00	.262529	21
40	9.680982	3.85	9.943210	1.15	9.737771	5.00	0.262229	20
41	.681213	3.83	.943141	1.15	.738071	5.00	.261929	19
42	.681443	3.85	.943072	1.15	.738371	5.00	.261629	18
43	.681674	3.85	.943003	1.15	.738671	5.00	.261329	17
44	.681905	3.83	.942934	1.17	.738971	5.00	.261029	16
45	9.682135	3.83	9.942864	1.15	9.739271	4.98	0.260729	15
46	.682365	3.83	.942795	1.15	.739570	5.00	.260430	14
47	.682595	3.83	.942726	1.17	.739870	4.98	.260130	13
48	.682825	3.83	.942656	1.15	.740169	4.98	.259831	12
49	.683055	3.82	.942587	1.17	.740468	4.98	.259532	11
50	9.683284	3.83	9.942517	1.15	9.740767	4.98	0.259233	10
51	.683514	3.82	.942448	1.17	.741066	4.98	.258934	9
52	.683743	3.82	.942378	1.17	.741365	4.98	.258635	8
53	.683972	3.82	.942308	1.15	.741664	4.97	.258336	7
54	.684201	3.82	.942239	1.17	.741962	4.98	.258038	6
55	9.684430	3.80	9.942169	1.17	9.742261	4.97	0.257739	5
56	.684658	3.82	.942099	1.17	.742559	4.98	.257441	4
57	.684887	3.80	.942029	1.17	.742858	4.97	.257142	3
58	.685115	3.80	.941959	1.17	.743156	4.97	.256844	2
59	.685343	3.80	.941889	1.17	.743454	4.97	.256546	1
60	9.685571		9.941819		9.743752		0.256248	0
	Cos.	D. 1″.	Sin.	D. 1″.	Cot.	D. 1″.	Tan.	M.

18° 61°

M.	Sin.	D. 1″.	Cos.	D. 1″.	Tan.	D. 1″.	Cot.	
0	9.685571	3.80	9.941819	1.17	9.743752	4.97	0.256248	60
1	.685799	3.80	.941749	1.17	.744050	4.97	.255950	59
2	.686027	3.78	.941679	1.17	.744348	4.95	.255652	58
3	.686254	3.80	.941609	1.17	.744645	4.97	.255355	57
4	.686482	3.78	.941539	1.17	.744943	4.95	.255057	56
5	9.686709	3.78	9.941469	1.18	9.745240	4.97	0.254760	55
6	.686936	3.78	.941398	1.17	.745538	4.95	.254462	54
7	.687163	3.77	.941328	1.17	.745835	4.95	.254165	53
8	.687389	3.78	.941258	1.18	.746132	4.95	.253868	52
9	.687616	3.78	.941187	1.17	.746429	4.95	.253571	51
10	9.687843	3.77	9.941117	1.18	9.746726	4.95	0.253274	50
11	.688069	3.77	.941046	1.18	.747023	4.93	.252977	49
12	.688295	3.77	.940975	1.17	.747319	4.95	.252681	48
13	.688521	3.77	.940905	1.18	.747616	4.95	.252384	47
14	.688747	3.75	.940834	1.18	.747913	4.93	.252087	46
15	9.688972	3.77	9.940763	1.17	9.748209	4.93	0.251791	45
16	.689198	3.75	.940693	1.18	.748505	4.93	.251495	44
17	.689423	3.75	.940622	1.18	.748801	4.93	.251199	43
18	.689648	3.75	.940551	1.18	.749097	4.93	.250903	42
19	.689873	3.75	.940480	1.18	.749393	4.93	.250607	41
20	9.690098	3.75	9.940409	1.18	9.749689	4.93	0.250311	40
21	.690323	3.75	.940338	1.18	.749985	4.93	.250015	39
22	.690548	3.73	.940267	1.18	.750281	4.92	.249719	38
23	.690772	3.73	.940196	1.18	.750576	4.93	.249424	37
24	.690996	3.73	.940125	1.18	.750872	4.92	.249128	36
25	9.691220	3.73	9.940054	1.20	9.751167	4.92	0.248833	35
26	.691444	3.73	.939982	1.18	.751462	4.92	.248538	34
27	.691668	3.73	.939911	1.18	.751757	4.92	.248243	33
28	.691892	3.72	.939840	1.20	.752052	4.92	.247948	32
29	.692115	3.73	.939768	1.18	.752347	4.92	.247653	31
30	9.692339	3.72	9.939697	1.20	9.752642	4.92	0.247358	30
31	.692562	3.72	.939625	1.18	.752937	4.90	.247063	29
32	.692785	3.72	.939554	1.20	.753231	4.92	.246769	28
33	.693008	3.72	.939482	1.20	.753526	4.90	.246474	27
34	.693231	3.70	.939410	1.18	.753820	4.92	.246180	26
35	9.693453	3.72	9.939339	1.20	9.754115	4.90	0.245885	25
36	.693676	3.70	.939267	1.20	.754409	4.90	.245591	24
37	.693898	3.70	.939195	1.20	.754703	4.90	.245297	23
38	.694120	3.70	.939123	1.18	.754997	4.90	.245003	22
39	.694342	3.70	.939052	1.20	.755291	4.90	.244709	21
40	9.694564	3.70	9.938980	1.20	9.755585	4.88	0.244415	20
41	.694786	3.68	.938908	1.20	.755878	4.90	.244122	19
42	.695007	3.70	.938836	1.22	.756172	4.88	.243828	18
43	.695229	3.68	.938763	1.20	.756465	4.90	.243535	17
44	.695450	3.68	.938691	1.20	.756759	4.88	.243241	16
45	9.695671	3.68	9.938619	1.20	9.757052	4.88	0.242948	15
46	.695892	3.68	.938547	1.20	.757345	4.88	.242655	14
47	.696113	3.68	.938475	1.22	.757638	4.88	.242362	13
48	.696334	3.67	.938402	1.20	.757931	4.88	.242069	12
49	.696554	3.68	.938330	1.20	.758224	4.88	.241776	11
	9.696775	3.67	9.938258	1.22	9.758517	4.88	0.241483	10
	.696995	3.67	.938185	1.20	.758810	4.87	.241190	9
	.697215	3.67	.938113	1.22	.759102	4.88	.240898	8
	.697435	3.65	.938040	1.22	.759395	4.87	.240605	7
	.697654	3.67	.937967	1.20	.759687	4.87	.240313	6
	9.697874	3.67	9.937895	1.22	9.759979	4.88	0.240021	5
	.698094	3.65	.937822	1.22	.760272	4.87	.239728	4
	.698313	3.65	.937749	1.22	.760564	4.87	.239436	3
	.698532	3.65	.937676	1.20	.760856	4.87	.239144	2
	.698751	3.65	.937604	1.22	.761148	4.85	.238852	1
	9.698970		9.937531		9.761439		0.238561	0
	Cos.	*D. 1″.*	Sin.	D. 1″.	Cot.	D. 1″.	Tan.	M.

60°

TABLE 55. — *Continued*

LOGARITHMIC SINES, COSINES, TANGENTS, AND COTANGENTS

30° 149°

M.	Sin.	D. 1″.	Cos.	D. 1″.	Tan.	D. 1″.	Cot.	
0	9.698970	3.65	9.937531	1.22	9.761439	4.87	0.238561	60
1	.699189	3.63	.937458	1.22	.761731	4.87	238269	59
2	.699407	3.65	.937385	1.22	.762023	4.85	.237977	58
3	.699626	3.63	.937312	1.23	.762314	4.87	.237686	57
4	.699844	3.63	.937238	1.22	.762606	4.85	.237394	56
5	9.700062	3.63	9.937165	1.22	9.762897	4.85	0.237103	55
6	.700280	3.63	.937092	1.22	.763188	4.85	.236812	54
7	.700498	3.63	.937019	1.22	.763479	4.85	.236521	53
8	.700716	3.62	.936946	1.23	.763770	4.85	.236230	52
9	.700933	3.63	.936872	1.22	.764061	4.85	.235939	51
10	9.701151	3.62	9.936799	1.23	9.764352	4.85	0.235648	50
11	.701368	3.62	.936725	1.22	.764643	4.83	.235357	49
12	.701585	3.62	.936652	1.23	.764933	4.85	.235067	48
13	.701802	3.62	.936578	1.22	.765224	4.83	.234776	47
14	.702019	3.62	.936505	1.23	.765514	4.85	.234486	46
15	9.702236	3.60	9.936431	1.23	9.765805	4.83	0.234195	45
16	.702452	3.62	.936357	1.22	.766095	4.83	.233905	44
17	.702669	3.60	.936284	1.23	.766385	4.83	.233615	43
18	.702885	3.60	.936210	1.23	.766675	4.83	.233325	42
19	.703101	3.60	.936136	1.23	.766965	4.83	.233035	41
20	9.703317	3.60	9.936062	1.23	9.767255	4.83	0.232745	40
21	.703533	3.60	.935988	1.23	.767545	4.82	.232455	39
22	.703749	3.58	.935914	1.23	.767834	4.83	.232166	38
23	.703964	3.58	.935840	1.23	.768124	4.83	.231876	37
24	.704179	3.60	.935766	1.23	.768414	4.82	.231586	36
25	9.704395	3.58	9.935692	1.23	9.768703	4.82	0.231297	35
26	.704610	3.58	.935618	1.25	.768992	4.82	.231008	34
27	.704825	3.58	.935543	1.23	.769281	4.83	.230719	33
28	.705040	3.57	.935469	1.23	.769571	4.82	.230429	32
29	.705254	3.58	.935395	1.25	.769860	4.80	.230140	31
30	9.705469	3.57	9.935320	1.23	9.770148	4.82	0.229852	30
31	.705683	3.58	.935246	1.25	.770437	4.82	.229563	29
32	.705898	3.57	.935171	1.23	.770726	4.82	.229274	28
33	.706112	3.57	.935097	1.25	.771015	4.80	.228985	27
34	.706326	3.55	.935022	1.23	.771303	4.82	.228697	26
35	9.706539	3.57	9.934948	1.25	9.771592	4.80	0.228408	25
36	.706753	3.57	.934873	1.25	.771880	4.80	.228120	24
37	.706967	3.55	.934798	1.25	.772168	4.82	.227832	23
38	.707180	3.55	.934723	1.23	.772457	4.80	.227543	22
39	.707393	3.55	.934649	1.25	.772745	4.80	.227255	21
40	9.707606	3.55	9.934574	1.25	9.773033	4.80	0.226967	20
41	.707819	3.55	.934499	1.25	.773321	4.78	.226679	19
42	.708032	3.55	.934424	1.25	.773608	4.80	.226392	18
43	.708245	3.55	.934349	1.25	.773896	4.80	.226104	17
44	.708458	3.53	.934274	1.25	.774184	4.78	.225816	16
45	9.708670	3.53	9.934199	1.27	9.774471	4.80	0.225529	15
46	.708882	3.53	.934123	1.25	.774759	4.78	.225241	14
47	.709094	3.53	.934048	1.25	.775046	4.78	.224954	13
48	.709306	3.53	.933973	1.25	.775333	4.80	.224667	12
49	.709518	3.53	.933898	1.27	.775621	4.78	.224379	11
50	9.709730	3.52	9.933822	1.25	9.775908	4.78	0.224092	10
51	.709941	3.53	.933747	1.27	.776195	4.78	.223805	9
52	.710153	3.52	.933671	1.25	.776482	4.77	.223518	8
53	.710364	3.52	.933596	1.27	.776768	4.78	.223232	7
54	.710575	3.52	.933520	1.25	.777055	4.78	.222945	6
55	9.710786	3.52	9.933445	1.27	9.777342	4.77	0.222658	5
56	.710997	3.52	.933369	1.27	.777628	4.78	.222372	4
57	.711208	3.52	.933293	1.27	.777915	4.77	.222085	3
58	.711419	3.50	.933217	1.27	.778201	4.78	.221799	2
59	.711629	3.50	.933141	1.25	.778488	4.77	.221512	1
60	9.711839		9.933066		9.778774		0.221226	0
	Cos.	D. 1″.	Sin.	D. 1″.	Cot.	D. 1″.	Tan.	M.

30° 59°

Sin.	D. 1″.	Cos.	D. 1″.	Tan.	D. 1″.	Cot.	
11839	3.52	9.933066	1.27	9.778774	4.77	0.221226	60
12050	3.50	.932990	1.27	.779060	4.77	.220940	59
12260	3.48	.932914	1.27	.779346	4.77	.220654	58
12469	3.50	.932838	1.27	.779632	4.77	.220368	57
12679	3.50	.932762	1.28	.779918	4.75	.220082	56
12889	3.48	9.932685	1.27	9.780203	4.77	0.219797	55
13098	3.50	.932609	1.27	.780489	4.77	.219511	54
13308	3.48	.932533	1.27	.780775	4.75	.219225	53
13517	3.48	.932457	1.28	.781060	4.77	.218940	52
13726	3.48	.932380	1.27	.781346	4.75	.218654	51
13935	3.48	9.932304	1.27	9.781631	4.75	0.218369	50
14144	3.47	.932228	1.28	.781916	4.75	.218084	49
14352	3.48	.932151	1.27	.782201	4.75	.217799	48
14561	3.47	.932075	1.28	.782486	4.75	.217514	47
14769	3.48	.931998	1.28	.782771	4.75	.217229	46
14978	3.47	9.931921	1.27	9.783056	4.75	0.216944	45
15186	3.47	.931845	1.28	.783341	4.75	.216659	44
15394	3.47	.931768	1.28	.783626	4.73	.216374	43
15602	3.45	.931691	1.28	.783910	4.75	.216090	42
15809	3.47	.931614	1.28	.784195	4.73	.215805	41
16017	3.45	9.931537	1.28	9.784479	4.75	0.215521	40
16224	3.47	.931460	1.28	.784764	4.73	.215236	39
16432	3.45	.931383	1.28	.785048	4.73	.214952	38
16639	3.45	.931306	1.28	.785332	4.73	.214668	37
16846	3.45	.931229	1.28	.785616	4.73	.214384	36
17053	3.43	9.931152	1.28	9.785900	4.73	0.214100	35
17259	3.45	.931075	1.28	.786184	4.73	.213816	34
17466	3.45	.930998	1.28	.786468	4.73	.213532	33
7673	3.43	.930921	1.30	.786752	4.73	.213248	32
7879	3.43	.930843	1.28	.787036	4.72	.212964	31
8085	3.43	9.930766	1.30	9.787319	4.73	0.212681	30
8291	3.43	.930688	1.28	.787603	4.72	.212397	29
8497	3.43	.930611	1.30	.787886	4.73	.212114	28
8703	3.43	.930533	1.28	.788170	4.72	.211830	27
8909	3.42	.930456	1.30	.788453	4.72	.211547	26
9114	3.43	9.930378	1.30	9.788736	4.72	0.211264	25
9320	3.42	.930300	1.28	.789019	4.72	.210981	24
9525	3.42	.930223	1.30	.789302	4.72	.210698	23
9730	3.42	.930145	1.30	.789585	4.72	.210415	22
9935	3.42	.930067	1.30	.789868	4.72	.210132	21
0140	3.42	9.929989	1.30	9.790151	4.72	0.209849	20
0345	3.40	.929911	1.30	.790434	4.70	.209566	19
0549	3.42	.929833	1.30	.790716	4.72	.209284	18
0754	3.40	.929755	1.30	.790999	4.70	.209001	17
0958	3.40	.929677	1.30	.791281	4.70	.208719	16
1162	3.40	9.929599	1.30	9.791563	4.72	0.208437	15
1365	3.40	.929521	1.32	.791846	4.70	.208154	14
1569	3.40	.929442	1.30	.792128	4.70	.207872	13
1772	3.40	.929364	1.30	.792410	4.70	.207590	12
1975	3.38	.929286	1.32	.792692	4.70	.207308	11
	3.40	9.929207	1.30	9.792974	4.70	0.207026	10
	3.38	.929129	1.32	.793256	4.70	.206744	9
	3.38	.929050	1.30	.793538	4.68	.206462	8
	3.38	.928972	1.32	.793819	4.70	.206181	7
	3.38	.928893	1.30	.794101	4.70	.205899	6
	3.38	9.928815	1.32	9.794383	4.68	0.205617	5
	3.38	.928736	1.32	.794664	4.70	.205336	4
	3.37	.928657	1.32	.794946	4.68	.205054	3
	3.37	.928578	1.32	.795227	4.68	.204773	2
	3.38	.928499	1.32	.795508	4.68	.204492	1
		9.928420		9.795789		0.204211	0
	D. 1″.	Sin.	D. 1″.	Cot.	D. 1″.	Tan.	M.

58°

TABLE 55. — *Continued*

LOGARITHMIC SINES, COSINES, TANGENTS, AND COTANGENTS

32° 147°

M.	Sin.	D. 1″.	Cos.	D. 1″.	Tan.	D. 1″.	Cot.	
0	9.724210	3.37	9.928420	1.30	9.795789	4.68	0.204211	60
1	.724412	3.37	.928342	1.32	.796070	4.68	.203930	59
2	.724614	3.37	.928263	1.33	.796351	4.68	.203649	58
3	.724816	3.35	.928183	1.32	.796632	4.68	.203368	57
4	.725017	3.37	.928104	1.32	.796913	4.68	.203087	56
5	9.725219	3.35	9.928025	1.32	9.797194	4.67	0.202806	55
6	.725420	3.37	.927946	1.32	.797474	4.68	.202526	54
7	.725622	3.35	.927867	1.33	.797755	4.68	.202245	53
8	.725823	3.35	.927787	1.32	.798036	4.67	.201964	52
9	.726024	3.35	.927708	1.32	.798316	4.67	.201684	51
10	9.726225	3.35	9.927629	1.33	9.798596	4.68	0.201404	50
11	.726426	3.33	.927549	1.32	.798877	4.67	.201123	49
12	.726626	3.35	.927470	1.33	.799157	4.67	.200843	48
13	.726827	3.33	.927390	1.33	.799437	4.67	.200563	47
14	.727027	3.35	.927310	1.32	.799717	4.67	.200283	46
15	9.727228	3.33	9.927231	1.33	9.799997	4.67	0.200003	45
16	.727428	3.33	.927151	1.33	.800277	4.67	.199723	44
17	.727628	3.33	.927071	1.33	.800557	4.65	.199443	43
18	.727828	3.32	.926991	1.33	.800836	4.67	.199164	42
19	.728027	3.33	.926911	1.33	.801116	4.67	.198884	41
20	9.728227	3.33	9.926831	1.33	9.801396	4.65	0.198604	40
21	.728427	3.32	.926751	1.33	.801675	4.67	.198325	39
22	.728626	3.32	.926671	1.33	.801955	4.65	.198045	38
23	.728825	3.32	.926591	1.33	.802234	4.65	.197766	37
24	.729024	3.32	.926511	1.33	.802513	4.65	.197487	36
25	9.729223	3.32	9.926431	1.33	9.802792	4.67	0.197208	35
26	.729422	3.32	.926351	1.35	.803072	4.65	.196928	34
27	.729621	3.32	.926270	1.33	.803351	4.65	.196649	33
28	.729820	3.30	.926190	1.33	.803630	4.65	.196370	32
29	.730018	3.32	.926110	1.35	.803909	4.63	.196091	31
30	9.730217	3.30	9.926029	1.33	9.804187	4.65	0.195813	30
31	.730415	3.30	.925949	1.35	.804466	4.65	.195534	29
32	.730613	3.30	.925868	1.33	.804745	4.63	.195255	28
33	.730811	3.30	.925788	1.35	.805023	4.65	.194977	27
34	.731009	3.28	.925707	1.35	.805302	4.63	.194698	26
35	9.731206	3.30	9.925626	1.35	9.805580	4.65	0.194420	25
36	.731404	3.30	.925545	1.33	.805859	4.63	.194141	24
37	.731602	3.28	.925465	1.35	.806137	4.63	.193863	23
38	.731799	3.28	.925384	1.35	.806415	4.63	.193585	22
39	.731996	3.28	.925303	1.35	.806693	4.63	.193307	21
40	9.732193	3.28	9.925222	1.35	9.806971	4.63	0.193029	20
41	.732390	3.28	.925141	1.35	.807249	4.63	.192751	19
42	.732587	3.28	.925060	1.35	.807527	4.63	.192473	18
43	.732784	3.27	.924979	1.37	.807805	4.63	.192195	17
44	.732980	3.28	.924897	1.35	.808083	4.63	.191917	16
45	9.733177	3.27	9.924816	1.35	9.808361	4.62	0.191639	15
46	.733373	3.27	.924735	1.35	.808638	4.63	.191362	14
47	.733569	3.27	.924654	1.37	.808916	4.62	.191084	13
48	.733765	3.27	.924572	1.35	.809193	4.63	.190807	12
49	.733961	3.27	.924491	1.37	.809471	4.62	.190529	11
50	9.734157	3.27	9.924409	1.35	9.809748	4.62	0.190252	10
51	.734353	3.27	.924328	1.37	.810025	4.62	.189975	9
52	.734549	3.25	.924246	1.37	.810302	4.63	.189698	8
53	.734744	3.25	.924164	1.35	.810580	4.62	.189420	7
54	.734939	3.27	.924083	1.37	.810857	4.62	.189143	6
55	9.735135	3.25	9.924001	1.37	9.811134	4.60	0.188866	5
56	.735330	3.25	.923919	1.37	.811410	4.62	.188590	4
57	.735525	3.23	.923837	1.37	.811687	4.62	.188313	3
58	.735719	3.25	.923755	1.37	.811964	4.62	.188036	2
59	.735914	3.25	.923673	1.37	.812241	4.60	.187759	1
60	9.736109		9.923591		9.812517		0.187483	0
	Cos.	D. 1″.	Sin.	D. 1″.	Cot.	D. 1″.	Tan.	M.

122° 57°

LOGARITHMIC SINES, COSINES, TANGENTS, AND COTANGENTS

33° 146°

M.	Sin.	D. 1″.	Cos.	D. 1″.	Tan.	D. 1″.	Cot.	
0	9.736109	3.23	9.923591	1.37	9.812517	4.62	0.187483	60
1	.736303	3.25	.923509	1.37	.812794	4.60	.187206	59
2	.736498	3.23	.923427	1.37	.813070	4.62	.186930	58
3	.736692	3.23	.923345	1.37	.813347	4.60	.186653	57
4	.736886	3.23	.923263	1.37	.813623	4.60	.186377	56
5	9.737080	3.22	9.923181	1.38	9.813899	4.62	0.186101	55
6	.737274	3.23	.923098	1.37	.814176	4.60	.185824	54
7	.737467	3.23	.923016	1.38	.814452	4.60	.185548	53
8	.737661	3.23	.922933	1.37	.814728	4.60	.185272	52
9	.737855	3.22	.922851	1.38	.815004	4.60	.184996	51
10	9.738048	3.22	9.922768	1.37	9.815280	4.58	0.184720	50
11	.738241	3.22	.922686	1.38	.815555	4.60	.184445	49
12	.738434	3.22	.922603	1.38	.815831	4.60	.184169	48
13	.738627	3.22	.922520	1.37	.816107	4.58	.183893	47
14	.738820	3.22	.922438	1.38	.816382	4.60	.183618	46
15	9.739013	3.22	9.922355	1.38	9.816658	4.58	0.183342	45
16	.739206	3.20	.922272	1.38	.816933	4.60	.183067	44
17	.739398	3.20	.922189	1.38	.817209	4.58	.182791	43
18	.739590	3.22	.922106	1.38	.817484	4.58	.182516	42
19	.739783	3.20	.922023	1.38	.817759	4.60	.182241	41
20	9.739975	3.20	9.921940	1.38	9.818035	4.58	0.181965	40
21	.740167	3.20	.921857	1.38	.818310	4.58	.181690	39
22	.740359	3.18	.921774	1.38	.818585	4.58	.181415	38
23	.740550	3.20	.921691	1.40	.818860	4.58	.181140	37
24	.740742	3.20	.921607	1.38	.819135	4.58	.180865	36
25	9.740934	3.18	9.921524	1.38	9.819410	4.57	0.180590	35
26	.741125	3.18	.921441	1.40	.819684	4.58	.180316	34
27	.741316	3.20	.921357	1.38	.819959	4.58	.180041	33
28	.741508	3.18	.921274	1.40	.820234	4.57	.179766	32
29	.741699	3.17	.921190	1.38	.820508	4.58	.179492	31
30	9.741889	3.18	9.921107	1.40	9.820783	4.57	0.179217	30
31	.742080	3.18	.921023	1.40	.821057	4.58	.178943	29
32	.742271	3.18	.920939	1.38	.821332	4.57	.178668	28
33	.742462	3.17	.920856	1.40	.821606	4.57	.178394	27
34	.742652	3.17	.920772	1.40	.821880	4.57	.178120	26
35	9.742842	3.18	9.920688	1.40	9.822154	4.58	0.177846	25
36	.743033	3.17	.920604	1.40	.822429	4.57	.177571	24
37	.743223	3.17	.920520	1.40	.822703	4.57	.177297	23
38	.743413	3.15	.920436	1.40	.822977	4.57	.177023	22
39	.743602	3.17	.920352	1.40	.823251	4.55	.176749	21
40	9.743792	3.17	9.920268	1.40	9.823524	4.57	0.176476	20
41	.743982	3.15	.920184	1.42	.823798	4.57	.176202	19
42	.744171	3.17	.920099	1.40	.824072	4.55	.175928	18
43	.744361	3.15	.920015	1.40	.824345	4.57	.175655	17
44	.744550	3.15	.919931	1.42	.824619	4.57	.175381	16
45	9.744739	3.15	9.919846	1.40	9.824893	4.55	0.175107	15
46	.744928	3.15	.919762	1.42	.825166	4.55	.174834	14
47	.745117	3.15	.919677	1.40	.825439	4.57	.174561	13
48	.745306	3.13	.919593	1.42	.825713	4.55	.174287	12
49	.745494	3.15	.919508	1.40	.825986	4.55	.174014	11
50	9.745683	3.13	9.919424	1.42	9.826259	4.55	0.173741	10
51	.745871	3.15	.919339	1.42	.826532	4.55	.173468	9
52	.746060	3.13	.919254	1.42	.826805	4.55	.173195	8
53	.746248	3.13	.919169	1.40	.827078	4.55	.172922	7
54	.746436	3.13	.919085	1.42	.827351	4.55	.172649	6
55	9.746624	3.13	9.919000	1.42	9.827624	4.55	0.172376	5
56	.746812	3.12	.918915	1.42	.827897	4.55	.172103	4
57	.746999	3.13	.918830	1.42	.828170	4.53	.171830	3
58	.747187	3.12	.918745	1.43	.828442	4.55	.171558	2
59	.747374	3.13	.918659	1.42	.828715	4.53	.171285	1
60	9.747562		9.918574		9.828987		0.171013	0
	Cos.	D. 1″.	Sin.	D. 1″.	Cot.	D. 1″.	Tan.	M.

123° 56°

TABLE 55. — *Continued*

LOGARITHMIC SINES, COSINES, TANGENTS, AND COTANGENTS

34° 145°

M.	Sin.	D. 1″.	Cos.	D. 1″.	Tan.	D. 1″.	Cot.	
0	9.747562	3.12	9.918574	1.42	9.828987	4.55	0.171013	60
1	.747749	3.12	.918489	1.42	.829260	4.53	.170740	59
2	.747936	3.12	.918404	1.43	.829532	4.55	.170468	58
3	.748123	3.12	.918318	1.42	.829805	4.53	.170195	57
4	.748310	3.12	.918233	1.43	.830077	4.53	.169923	56
5	9.748497	3.10	9.918147	1.42	9.830349	4.53	0.169651	55
6	.748683	3.12	.918062	1.43	.830621	4.53	.169379	54
7	.748870	3.10	.917976	1.42	.830893	4.53	.169107	53
8	.749056	3.12	.917891	1.43	.831165	4.53	.168835	52
9	.749243	3.10	.917805	1.43	.831437	4.53	.168563	51
10	9.749429	3.10	9.917719	1.42	9.831709	4.53	0.168291	50
11	.749615	3.10	.917634	1.43	.831981	4.53	.168019	49
12	.749801	3.10	.917548	1.43	.832253	4.53	.167747	48
13	.749987	3.08	.917462	1.43	.832525	4.52	.167475	47
14	.750172	3.10	.917376	1.43	.832796	4.53	.167204	46
15	9.750358	3.08	9.917290	1.43	9.833068	4.52	0.166932	45
16	.750543	3.10	.917204	1.43	.833339	4.53	.166661	44
17	.750729	3.08	.917118	1.43	.833611	4.52	.166389	43
18	.750914	3.08	.917032	1.43	.833882	4.53	.166118	42
19	.751099	3.08	.916946	1.45	.834154	4.52	.165846	41
20	9.751284	3.08	9.916859	1.43	9.834425	4.52	0.165575	40
21	.751469	3.08	.916773	1.43	.834696	4.52	.165304	39
22	.751654	3.08	.916687	1.45	.834967	4.52	.165033	38
23	.751839	3.07	.916600	1.43	.835238	4.52	.164762	37
24	.752023	3.08	.916514	1.45	.835509	4.52	.164491	36
25	9.752208	3.07	9.916427	1.43	9.835780	4.52	0.164220	35
26	.752392	3.07	.916341	1.45	.836051	4.52	.163949	34
27	.752576	3.07	.916254	1.45	.836322	4.52	.163678	33
28	.752760	3.07	.916167	1.43	.836593	4.52	.163407	32
29	.752944	3.07	.916081	1.45	.836864	4.50	.163136	31
30	9.753128	3.07	9.915994	1.45	9.837134	4.52	0.162866	30
31	.753312	3.05	.915907	1.45	.837405	4.50	.162595	29
32	.753495	3.07	.915820	1.45	.837675	4.52	.162325	28
33	.753679	3.05	.915733	1.45	.837946	4.50	.162054	27
34	.753862	3.07	.915646	1.45	.838216	4.52	.161784	26
35	9.754046	3.05	9.915559	1.45	9.838487	4.50	0.161513	25
36	.754229	3.05	.915472	1.45	.838757	4.50	.161243	24
37	.754412	3.05	.915385	1.47	.839027	4.50	.160973	23
38	.754595	3.05	.915297	1.45	.839297	4.52	.160703	22
39	.754778	3.03	.915210	1.45	.839568	4.50	.160432	21
40	9.754960	3.05	9.915123	1.47	9.839838	4.50	0.160162	20
41	.755143	3.05	.915035	1.45	.840108	4.50	.159892	19
42	.755326	3.03	.914948	1.47	.840378	4.50	.159622	18
43	.755508	3.03	.914860	1.45	.840648	4.48	.159352	17
44	.755690	3.03	.914773	1.47	.840917	4.50	.159083	16
45	9.755872	3.03	9.914685	1.45	9.841187	4.50	0.158813	15
46	.756054	3.03	.914598	1.47	.841457	4.50	.158543	14
47	.756236	3.03	.914510	1.47	.841727	4.48	.158273	13
48	.756418	3.03	.914422	1.47	.841996	4.50	.158004	12
49	.756600	3.03	.914334	1.47	.842266	4.48	.157734	11
50	9.756782	3.02	9.914246	1.47	9.842535	4.50	0.157465	10
51	.756963	3.02	.914158	1.47	.842805	4.48	.157195	9
52	.757144	3.03	.914070	1.47	.843074	4.48	.156926	8
53	.757326	3.02	.913982	1.47	.843343	4.48	.156657	7
54	.757507	3.02	.913894	1.47	.843612	4.50	.156388	6
55	9.757688	3.02	9.913806	1.47	9.843882	4.48	0.156118	5
56	.757869	3.02	.913718	1.47	.844151	4.48	.155849	4
57	.758050	3.00	.913630	1.48	.844420	4.48	.155580	3
58	.758230	3.02	.913541	1.47	.844689	4.48	.155311	2
59	.758411	3.00	.913453	1.47	.844958	4.48	.155042	1
60	9.758591		9.913365		9.845227		0.154773	0
	Cos.	*D. 1″.*	Sin.	D. 1″.	Cot.	D. 1″.	Tan.	M.

34° 55°

M.	Sin.	D. 1″.	Cos.	D. 1″.	Tan.	D. 1″.	Cot.	
0	9.758591	3.02	9.913365	1.48	9.845227	4.48	0.154773	60
1	.758772	3.00	.913276	1.48	.845496	4.47	.154504	59
2	.758952	3.00	.913187	1.47	.845764	4.48	.154236	58
3	.759132	3.00	.913099	1.48	.846033	4.48	.153967	57
4	.759312	3.00	.913010	1.47	.846302	4.47	.153698	56
5	9.759492	3.00	9.912922	1.48	9.846570	4.48	0.153430	55
6	.759672	3.00	.912833	1.48	.846839	4.48	.153161	54
7	.759852	2.98	.912744	1.48	.847108	4.47	.152892	53
8	.760031	3.00	.912655	1.48	.847376	4.47	.152624	52
9	.760211	2.98	.912566	1.48	.847644	4.48	.152356	51
10	9.760390	2.98	9.912477	1.48	9.847913	4.47	0.152087	50
11	.760569	2.98	.912388	1.48	.848181	4.47	.151819	49
12	.760748	2.98	.912299	1.48	.848449	4.47	.151551	48
13	.760927	2.98	.912210	1.48	.848717	4.48	.151283	47
14	.761106	2.98	.912121	1.50	.848986	4.47	.151014	46
15	9.761285	2.98	9.912031	1.48	9.849254	4.47	0.150746	45
16	.761464	2.97	.911942	1.48	.849522	4.47	.150478	44
17	.761642	2.98	.911853	1.50	.849790	4.45	.150210	43
18	.761821	2.97	.911763	1.48	.850057	4.47	.149943	42
19	.761999	2.97	.911674	1.50	.850325	4.47	.149675	41
20	9.762177	2.98	9.911584	1.48	9.850593	4.47	0.149407	40
21	.762356	2.97	.911495	1.50	.850861	4.47	.149139	39
22	.762534	2.97	.911405	1.50	.851129	4.45	.148871	38
23	.762712	2.95	.911315	1.48	.851396	4.47	.148604	37
24	.762889	2.97	.911226	1.50	.851664	4.45	.148336	36
25	9.763067	2.97	9.911136	1.50	9.851931	4.47	0.148069	35
26	.763245	2.95	.911046	1.50	.852199	4.45	.147801	34
27	.763422	2.97	.910956	1.50	.852466	4.45	.147534	33
28	.763600	2.95	.910866	1.50	.852733	4.47	.147267	32
29	.763777	2.95	.910776	1.50	.853001	4.45	.146999	31
30	9.763954	2.95	9.910686	1.50	9.853268	4.45	0.146732	30
31	.764131	2.95	.910596	1.50	.853535	4.45	.146465	29
32	.764308	2.95	.910506	1.52	.853802	4.45	.146198	28
33	.764485	2.95	.910415	1.50	.854069	4.45	.145931	27
34	.764662	2.93	.910325	1.50	.854336	4.45	.145664	26
35	9.764838	2.95	9.910235	1.52	9.854603	4.45	0.145397	25
36	.765015	2.93	.910144	1.50	.854870	4.45	.145130	24
37	.765191	2.93	.910054	1.52	.855137	4.45	.144863	23
38	.765367	2.95	.909963	1.50	.855404	4.45	.144596	22
39	.765544	2.93	.909873	1.52	.855671	4.45	.144329	21
40	9.765720	2.93	9.909782	1.52	9.855938	4.43	0.144062	20
41	.765896	2.93	.909691	1.50	.856204	4.45	.143796	19
42	.766072	2.92	.909601	1.52	.856471	4.43	.143529	18
43	.766247	2.93	.909510	1.52	.856737	4.45	.143263	17
44	.766423	2.92	.909419	1.52	.857004	4.43	.142996	16
45	9.766598	2.93	9.909328	1.52	9.857270	4.45	0.142730	15
46	.766774	2.92	.909237	1.52	.857537	4.43	.142463	14
47	.766949	2.92	.909146	1.52	.857803	4.43	.142197	13
48	.767124	2.93	.909055	1.52	.858069	4.45	.141931	12
49	.767300	2.92	.908964	1.52	.858336	4.43	.141664	11
50	.767475	2.90	9.908873	1.53	9.858602	4.43	0.141398	10
51	.767649	2.92	.908781	1.52	.858868	4.43	.141132	9
52	.767824	2.92	.908690	1.52	.859134	4.43	.140866	8
53	.767999	2.90	.908599	1.53	.859400	4.43	.140600	7
54	.768173	2.92	.908507	1.52	.859666	4.43	.140334	6
55	.768348	2.90	9.908416	1.53	9.859932	4.43	0.140068	5
56	.768522	2.92	.908324	1.52	.860198	4.43	.139802	4
57	.768697	2.90	.908233	1.53	.860464	4.43	.139536	3
58	.768871	2.90	.908141	1.53	.860730	4.42	.139270	2
59	.769045	2.90	.908049	1.52	.860995	4.43	.139005	1
60	.769219		9.907958		9.861261		0.138739	0
	Cos.	D. 1″.	Sin.	D. 1″.	Cot.	D. 1″.	Tan.	M.

TABLE 55. — *Continued*

LOGARITHMIC SINES, COSINES, TANGENTS, AND COTANGENTS

36° 143°

M.	Sin.	D. 1″.	Cos.	D. 1″.	Tan.	D. 1″.	Cot.	
0	9.769219	2.90	9.907958	1.53	9.861261	4.43	0.138739	60
1	.769393	2.88	.907866	1.53	.861527	4.42	.138473	59
2	.769566	2.90	.907774	1.53	.861792	4.43	.138208	58
3	.769740	2.88	.907682	1.53	.862058	4.42	.137942	57
4	.769913	2.90	.907590	1.53	.862323	4.43	.137677	56
5	9.770087	2.88	9.907498	1.53	9.862589	4.42	0.137411	55
6	.770260	2.88	.907406	1.53	.862854	4.42	.137146	54
7	.770433	2.88	.907314	1.53	.863119	4.43	.136881	53
8	.770606	2.88	.907222	1.55	.863385	4.42	.136615	52
9	.770779	2.88	.907129	1.53	.863650	4.42	.136350	51
10	9.770952	2.88	9.907037	1.53	9.863915	4.42	0.136085	50
11	.771125	2.88	.906945	1.55	.864180	4.42	.135820	49
12	.771298	2.87	.906852	1.53	.864445	4.42	.135555	48
13	.771470	2.88	.906760	1.55	.864710	4.42	.135290	47
14	.771643	2.87	.906667	1.53	.864975	4.42	.135025	46
15	9.771815	2.87	9.906575	1.55	9.865240	4.42	0.134760	45
16	.771987	2.87	.906482	1.55	.865505	4.42	.134495	44
17	.772159	2.87	.906389	1.55	.865770	4.42	.134230	43
18	.772331	2.87	.906296	1.53	.866035	4.42	.133965	42
19	.772503	2.87	.906204	1.55	.866300	4.40	.133700	41
20	9.772675	2.87	9.906111	1.55	9.866564	4.42	0.133436	40
21	.772847	2.85	.906018	1.55	.866829	4.42	.133171	39
22	.773018	2.87	.905925	1.55	.867094	4.40	.132906	38
23	.773190	2.85	.905832	1.55	.867358	4.42	.132642	37
24	.773361	2.87	.905739	1.57	.867623	4.40	.132377	36
25	9.773533	2.85	9.905645	1.55	9.867887	4.42	0.132113	35
26	.773704	2.85	.905552	1.55	.868152	4.40	.131848	34
27	.773875	2.85	.905459	1.55	.868416	4.40	.131584	33
28	.774046	2.85	.905366	1.57	.868680	4.42	.131320	32
29	.774217	2.85	.905272	1.55	.868945	4.40	.131055	31
30	9.774388	2.83	9.905179	1.57	9.869209	4.40	0.130791	30
31	.774558	2.85	.905085	1.55	.869473	4.40	.130527	29
32	.774729	2.83	.904992	1.57	.869737	4.40	.130263	28
33	.774899	2.85	.904898	1.57	.870001	4.40	.129999	27
34	.775070	2.83	.904804	1.55	.870265	4.40	.129735	26
35	9.775240	2.83	9.904711	1.57	9.870529	4.40	0.129471	25
36	.775410	2.83	.904617	1.57	.870793	4.40	.129207	24
37	.775580	2.83	.904523	1.57	.871057	4.40	.128943	23
38	.775750	2.83	.904429	1.57	.871321	4.40	.128679	22
39	.775920	2.83	.904335	1.57	.871585	4.40	.128415	21
40	9.776090	2.82	9.904241	1.57	9.871849	4.38	0.128151	20
41	.776259	2.83	.904147	1.57	.872112	4.40	.127888	19
42	.776429	2.82	.904053	1.57	.872376	4.40	.127624	18
43	.776598	2.83	.903959	1.58	.872640	4.38	.127360	17
44	.776768	2.82	.903864	1.57	.872903	4.40	.127097	16
45	9.776937	2.82	9.903770	1.57	9.873167	4.38	0.126833	15
46	.777106	2.82	.903676	1.58	.873430	4.40	.126570	14
47	.777275	2.82	.903581	1.57	.873694	4.38	.126306	13
48	.777444	2.82	.903487	1.58	.873957	4.38	.126043	12
49	.777613	2.80	.903392	1.57	.874220	4.40	.125780	11
50	9.777781	2.82	9.903298	1.58	9.874484	4.38	0.125516	10
51	.777950	2.82	.903203	1.58	.874747	4.38	.125253	9
52	.778119	2.80	.903108	1.57	.875010	4.38	.124990	8
53	.778287	2.80	.903014	1.58	.875273	4.40	.124727	7
54	.778455	2.82	.902919	1.58	.875537	4.38	.124463	6
55	9.778624	2.80	9.902824	1.58	9.875800	4.38	0.124200	5
56	.778792	2.80	.902729	1.58	.876063	4.38	.123937	4
57	.778960	2.80	.902634	1.58	.876326	4.38	.123674	3
58	.779128	2.78	.902539	1.58	.876589	4.38	.123411	2
59	.779295	2.80	.902444	1.58	.876852	4.37	.123148	1
60	9.779463		9.902349		9.877114		0.122886	0
	Cos.	D. 1″.	Sin.	D. 1″.	Cot.	D. 1″.	Tan.	M.

126° 53°

TABLE 55. — *Continued*

LOGARITHMIC SINES, COSINES, TANGENTS, AND COTANGENTS

37° **142°**

M.	Sin.	D. 1″.	Cos.	D. 1″.	Tan.	D. 1″.	Cot.	
0	9.779463	2.80	9.902349	1.60	9.877114	4.38	0.122886	60
1	.779631	2.78	.902253	1.58	.877377	4.38	.122623	59
2	.779798	2.80	.902158	1.58	.877640	4.38	.122360	58
3	.779966	2.78	.902063	1.60	.877903	4.37	.122097	57
4	.780133	2.78	.901967	1.58	.878165	4.38	.121835	56
5	9.780300	2.78	9.901872	1.60	9.878428	4.38	0.121572	55
6	.780467	2.78	.901776	1.58	.878691	4.37	.121309	54
7	.780634	2.78	.901681	1.60	.878953	4.38	.121047	53
8	.780801	2.78	.901585	1.58	.879216	4.37	.120784	52
9	.780968	2.77	.901490	1.60	.879478	4.38	.120522	51
10	9.781134	2.78	9.901394	1.60	9.879741	4.37	0.120259	50
11	.781301	2.78	.901298	1.60	.880003	4.37	.119997	49
12	.781468	2.77	.901202	1.60	.880265	4.38	.119735	48
13	.781634	2.77	.901106	1.60	.880528	4.37	.119472	47
14	.781800	2.77	.901010	1.60	.880790	4.37	.119210	46
15	9.781966	2.77	9.900914	1.60	9.881052	4.37	0.118948	45
16	.782132	2.77	.900818	1.60	.881314	4.38	.118686	44
17	.782298	2.77	.900722	1.60	.881577	4.37	.118423	43
18	.782464	2.77	.900626	1.62	.881839	4.37	.118161	42
19	.782630	2.77	.900529	1.60	.882101	4.37	.117899	41
20	9.782796	2.75	9.900433	1.60	9.882363	4.37	0.117637	40
21	.782961	2.77	.900337	1.62	.882625	4.37	.117375	39
22	.783127	2.75	.900240	1.60	.882887	4.35	.117113	38
23	.783292	2.77	.900144	1.62	.883148	4.37	.116852	37
24	.783458	2.75	.900047	1.60	.883410	4.37	.116590	36
25	9.783623	2.75	9.899951	1.62	9.883672	4.37	0.116328	35
26	.783788	2.75	.899854	1.62	.883934	4.37	.116066	34
27	.783953	2.75	.899757	1.62	.884196	4.35	.115804	33
28	.784118	2.73	.899660	1.60	.884457	4.37	.115543	32
29	.784282	2.75	.899564	1.62	.884719	4.35	.115281	31
30	9.784447	2.75	9.899467	1.62	9.884980	4.37	0.115020	30
31	.784612	2.73	.899370	1.62	.885242	4.37	.114758	29
32	.784776	2.75	.899273	1.62	.885504	4.35	.114496	28
33	.784941	2.73	.899176	1.63	.885765	4.35	.114235	27
34	.785105	2.73	.899078	1.62	.886026	4.37	.113974	26
35	9.785269	2.73	9.898981	1.62	9.886288	4.35	0.113712	25
36	.785433	2.73	.898884	1.62	.886549	4.37	.113451	24
37	.785597	2.73	.898787	1.63	.886811	4.35	.113189	23
38	.785761	2.73	.898689	1.62	.887072	4.35	.112928	22
39	.785925	2.73	.898592	1.63	.887333	4.35	.112667	21
40	9.786089	2.72	9.898494	1.62	9.887594	4.35	0.112406	20
41	.786252	2.73	.898397	1.63	.887855	4.35	.112145	19
42	.786416	2.72	.898299	1.62	.888116	4.37	.111884	18
43	.786579	2.72	.898202	1.63	.888378	4.35	.111622	17
44	.786742	2.73	.898104	1.63	.888639	4.35	.111361	16
45	9.786906	2.72	9.898006	1.63	9.888900	4.35	0.111100	15
46	.787069	2.72	.897908	1.63	.889161	4.33	.110839	14
47	.787232	2.72	.897810	1.63	.889421	4.35	.110579	13
48	.787395	2.70	.897712	1.63	.889682	4.35	.110318	12
49	.787557	2.72	.897614	1.63	.889943	4.35	.110057	11
50	9.787720	2.72	9.897516	1.63	9.890204	4.35	0.109796	10
51	.787883	2.70	.897418	1.63	.890465	4.33	.109535	9
52	.788045	2.72	.897320	1.63	.890725	4.35	.109275	8
53	.788208	2.70	.897222	1.65	.890986	4.35	.109014	7
54	.788370	2.70	.897123	1.63	.891247	4.33	.108753	6
55	9.788532	2.70	9.897025	1.65	9.891507	4.35	0.108493	5
56	.788694	2.70	.896926	1.63	.891768	4.33	.108232	4
57	.788856	2.70	.896828	1.65	.892028	4.35	.107972	3
58	.789018	2.70	.896729	1.63	.892289	4.33	.107711	2
59	.789180	2.70	.896631	1.65	.892549	4.35	.107451	1
60	9.789342		9.896532		9.892810		0.107190	0
	Cos.	D. 1″.	Sin.	D. 1″.	Cot.	D. 1″.	Tan.	M

TABLE 55. — *Continued*

LOGARITHMIC SINES, COSINES, TANGENTS, AND COTANGENTS

38° 141°

M.	Sin.	D. 1″.	Cos.	D. 1″.	Tan.	D. 1″.	Cot.	
0	9.789342	2.70	9.896532	1.65	9.892810	4.33	0.107190	60
1	.789504	2.68	.896433	1.63	.893070	4.35	.106930	59
2	.789665	2.70	.896335	1.65	.893331	4.33	.106669	58
3	.789827	2.68	.896236	1.65	.893591	4.33	.106409	57
4	.789988	2.68	.896137	1.65	.893851	4.33	.106149	56
5	9.790149	2.68	9.896038	1.65	9.894111	4.35	0.105889	55
6	.790310	2.68	.895939	1.65	.894372	4.33	.105628	54
7	.790471	2.68	.895840	1.65	.894632	4.33	.105368	53
8	.790632	2.68	.895741	1.67	.894892	4.33	.105108	52
9	.790793	2.68	.895641	1.65	.895152	4.33	.104848	51
10	9.790954	2.68	9.895542	1.65	9.895412	4.33	0.104588	50
11	.791115	2.67	.895443	1.67	.895672	4.33	.104328	49
12	.791275	2.68	.895343	1.65	.895932	4.33	.104068	48
13	.791436	2.67	.895244	1.65	.896192	4.33	.103808	47
14	.791596	2.68	.895145	1.67	.896452	4.33	.103548	46
15	9.791757	2.67	9.895045	1.67	9.896712	4.32	0.103288	45
16	.791917	2.67	.894945	1.65	.896971	4.33	.103029	44
17	.792077	2.67	.894846	1.67	.897231	4.33	.102769	43
18	.792237	2.67	.894746	1.67	.897491	4.33	.102509	42
19	.792397	2.67	.894646	1.67	.897751	4.32	.102249	41
20	9.792557	2.65	9.894546	1.67	9.898010	4.33	0.101990	40
21	.792716	2.67	.894446	1.67	.898270	4.33	.101730	39
22	.792876	2.65	.894346	1.67	.898530	4.32	.101470	38
23	.793035	2.67	.894246	1.67	.898789	4.33	.101211	37
24	.793195	2.65	.894146	1.67	.899049	4.32	.100951	36
25	9.793354	2.67	9.894046	1.67	9.899308	4.33	0.100692	35
26	.793514	2.65	.893946	1.67	.899568	4.32	.100432	34
27	.793673	2.65	.893846	1.68	.899827	4.33	.100173	33
28	.793832	2.65	.893745	1.67	.900087	4.32	.099913	32
29	.793991	2.65	.893645	1.68	.900346	4.32	.099654	31
30	9.794150	2.63	9.893544	1.67	9.900605	4.32	0.099395	30
31	.794308	2.65	.893444	1.68	.900864	4.33	.099136	29
32	.794467	2.65	.893343	1.67	.901124	4.32	.098876	28
33	.794626	2.63	.893243	1.68	.901383	4.32	.098617	27
34	.794784	2.63	.893142	1.68	.901642	4.32	.098358	26
35	9.794942	2.65	9.893041	1.68	9.901901	4.32	0.098099	25
36	.795101	2.63	.892940	1.68	.902160	4.33	.097840	24
37	.795259	2.63	.892839	1.67	.902420	4.32	.097580	23
38	.795417	2.63	.892739	1.68	.902679	4.32	.097321	22
39	.795575	2.63	.892638	1.70	.902938	4.32	.097062	21
40	9.795733	2.63	9.892536	1.68	9.903197	4.32	0.096803	20
41	.795891	2.63	.892435	1.68	.903456	4.30	.096544	19
42	.796049	2.62	.892334	1.68	.903714	4.32	.096286	18
43	.796206	2.63	.892233	1.68	.903973	4.32	.096027	17
44	.796364	2.62	.892132	1.70	.904232	4.32	.095768	16
45	9.796521	2.63	9.892030	1.68	9.904491	4.32	0.095509	15
46	.796679	2.62	.891929	1.70	.904750	4.30	.095250	14
47	.796836	2.62	.891827	1.68	.905008	4.32	.094992	13
48	.796993	2.62	.891726	1.70	.905267	4.32	.094733	12
49	.797150	2.62	.891624	1.68	.905526	4.32	.094474	11
50	9.797307	2.62	9.891523	1.70	9.905785	4.30	0.094215	10
51	.797464	2.62	.891421	1.70	.906043	4.32	.093957	9
52	.797621	2.60	.891319	1.70	.906302	4.30	.093698	8
53	.797777	2.62	.891217	1.70	.906560	4.32	.093440	7
54	.797934	2.62	.891115	1.70	.906819	4.30	.093181	6
55	9.798091	2.60	9.891013	1.70	9.907077	4.32	0.092923	5
56	.798247	2.60	.890911	1.70	.907336	4.30	.092664	4
57	.798403	2.62	.890809	1.70	.907594	4.32	.092406	3
58	.798560	2.60	.890707	1.70	.907853	4.30	.092147	2
59	.798716	2.60	.890605	1.70	.908111	4.30	.091889	1
60	9.798872		9.890503		9.908369		0.091631	0
	Cos.	D. 1″.	Sin.	D. 1″.	Cot.	D. 1″.	Tan.	M.

128° 51°

LOGARITHMIC SINES, COSINES, TANGENTS, AND COTANGENTS

39° 140°

M.	Sin.	D. 1″.	Cos.	D. 1″.	Tan.	D. 1″.	Cot.	
0	9.798872	2.60	9.890503	1.72	9.908369	4.32	0.091631	60
1	.799028	2.60	.890400	1.70	.908628	4.30	.091372	59
2	.799184	2.58	.890298	1.72	.908886	4.30	.091114	58
3	.799339	2.60	.890195	1.70	.909144	4.30	.090856	57
4	.799495	2.60	.890093	1.72	.909402	4.30	.090598	56
5	9.799651	2.58	9.889990	1.70	9.909660	4.30	0.090340	55
6	.799806	2.60	.889888	1.72	.909918	4.32	.090082	54
7	.799962	2.58	.889785	1.72	.910177	4.30	.089823	53
8	.800117	2.58	.889682	1.72	.910435	4.30	.089565	52
9	.800272	2.58	.889579	1.70	.910693	4.30	.089307	51
10	9.800427	2.58	9.889477	1.72	9.910951	4.30	0.089049	50
11	.800582	2.58	.889374	1.72	.911209	4.30	.088791	49
12	.800737	2.58	.889271	1.72	.911467	4.30	.088533	48
13	.800892	2.58	.889168	1.73	.911725	4.28	.088275	47
14	.801047	2.57	.889064	1.72	.911982	4.30	.088018	46
15	9.801201	2.58	9.888961	1.72	9.912240	4.30	0.087760	45
16	.801356	2.58	.888858	1.72	.912498	4.30	.087502	44
17	.801511	2.57	.888755	1.73	.912756	4.30	.087244	43
18	.801665	2.57	.888651	1.72	.913014	4.28	.086986	42
19	.801819	2.57	.888548	1.73	.913271	4.30	.086729	41
20	9.801973	2.58	9.888444	1.72	9.913529	4.30	0.086471	40
21	.802128	2.57	.888341	1.73	.913787	4.28	.086213	39
22	.802282	2.57	.888237	1.72	.914044	4.30	.085956	38
23	.802436	2.55	.888134	1.73	.914302	4.30	.085698	37
24	.802589	2.57	.888030	1.73	.914560	4.28	.085440	36
25	9.802743	2.57	9.887926	1.73	9.914817	4.30	0.085183	35
26	.802897	2.55	.887822	1.73	.915075	4.28	.084925	34
27	.803050	2.57	.887718	1.73	.915332	4.30	.084668	33
28	.803204	2.55	.887614	1.73	.915590	4.28	.084410	32
29	.803357	2.57	.887510	1.73	.915847	4.28	.084153	31
30	9.803511	2.55	9.887406	1.73	9.916104	4.30	0.083896	30
31	.803664	2.55	.887302	1.73	.916362	4.28	.083638	29
32	.803817	2.55	.887198	1.75	.916619	4.30	.083381	28
33	.803970	2.55	.887093	1.73	.916877	4.28	.083123	27
34	.804123	2.55	.886989	1.73	.917134	4.28	.082866	26
35	9.804276	2.53	9.886885	1.75	9.917391	4.28	0.082609	25
36	.804428	2.55	.886780	1.73	.917648	4.30	.082352	24
37	.804581	2.55	.886676	1.75	.917906	4.28	.082094	23
38	.804734	2.53	.886571	1.75	.918163	4.28	.081837	22
39	.804886	2.55	.886466	1.73	.918420	4.28	.081580	21
40	9.805039	2.53	9.886362	1.75	9.918677	4.28	0.081323	20
41	.805191	2.53	.886257	1.75	.918934	4.28	.081066	19
42	.805343	2.53	.886152	1.75	.919191	4.28	.080809	18
43	.805495	2.53	.886047	1.75	.919448	4.28	.080552	17
44	.805647	2.53	.885942	1.75	.919705	4.28	.080295	16
45	9.805799	2.53	9.885837	1.75	9.919962	4.28	0.080038	15
46	.805951	2.53	.885732	1.75	.920219	4.28	.079781	14
47	.806103	2.52	.885627	1.75	.920476	4.28	.079524	13
48	.806254	2.53	.885522	1.77	.920733	4.28	.079267	12
49	.806406	2.52	.885416	1.75	.920990	4.28	.079010	11
50	9.806557	2.53	9.885311	1.77	9.921247	4.27	0.078753	10
51	.806709	2.52	.885205	1.75	.921503	4.28	.078497	9
52	.806860	2.52	.885100	1.77	.921760	4.28	.078240	8
53	.807011	2.53	.884994	1.75	.922017	4.28	.077983	7
54	.807163	2.52	.884889	1.77	.922274	4.27	.077726	6
55	9.807314	2.52	9.884783	1.77	9.922530	4.28	0.077470	5
56	.807465	2.50	.884677	1.75	.922787	4.28	.077213	4
57	.807615	2.52	.884572	1.77	.923044	4.27	.076956	3
58	.807766	2.52	.884466	1.77	.923300	4.28	.076700	2
59	.807917	2.50	.884360	1.77	.923557	4.28	.076443	1
60	9.808067		9.884254		9.923814		0.076186	0
	Cos.	D. 1″.	Sin.	D. 1″.	Cot.	D. 1″.	Tan.	

129°

TABLE 55. — *Continued*

LOGARITHMIC SINES, COSINES, TANGENTS, AND COTANGENTS

40° 139°

M.	Sin.	D. 1″.	Cos.	D. 1″.	Tan.	D. 1″.	Cot.	
0	9.808067	2.52	9.884254	1.77	9.923814	4.27	0.076186	60
1	.808218	2.50	.884148	1.77	.924070	4.28	.075930	59
2	.808368	2.52	.884042	1.77	.924327	4.27	.075673	58
3	.808519	2.50	.883936	1.78	.924583	4.28	.075417	57
4	.808669	2.50	.883829	1.77	.924840	4.27	.075160	56
5	9.808819	2.50	9.883723	1.77	9.925096	4.27	0.074904	55
6	.808969	2.50	.883617	1.78	.925352	4.28	.074648	54
7	.809119	2.50	.883510	1.77	.925609	4.27	.074391	53
8	.809269	2.50	.883404	1.78	.925865	4.28	.074135	52
9	.809419	2.50	.883297	1.77	.926122	4.27	.073878	51
10	9.809569	2.48	9.883191	1.78	9.926378	4.27	0.073622	50
11	.809718	2.50	.883084	1.78	.926634	4.27	.073366	49
12	.809868	2.48	.882977	1.77	.926890	4.28	.073110	48
13	.810017	2.50	.882871	1.78	.927147	4.27	.072853	47
14	.810167	2.48	.882764	1.78	.927403	4.27	.072597	46
15	9.810316	2.48	9.882657	1.78	9.927659	4.27	0.072341	45
16	.810465	2.48	.882550	1.78	.927915	4.27	.072085	44
17	.810614	2.48	.882443	1.78	.928171	4.27	.071829	43
18	.810763	2.48	.882336	1.78	.928427	4.28	.071573	42
19	.810912	2.48	.882229	1.80	.928684	4.27	.071316	41
20	9.811061	2.48	9.882121	1.78	9.928940	4.27	0.071060	40
21	.811210	2.47	.882014	1.78	.929196	4.27	.070804	39
22	.811358	2.48	.881907	1.80	.929452	4.27	.070548	38
23	.811507	2.47	.881799	1.78	.929708	4.27	.070292	37
24	.811655	2.48	.881692	1.80	.929964	4.27	.070036	36
25	9.811804	2.47	9.881584	1.78	9.930220	4.25	0.069780	35
26	.811952	2.47	.881477	1.80	.930475	4.27	.069525	34
27	.812100	2.47	.881369	1.80	.930731	4.27	.069269	33
28	.812248	2.47	.881261	1.80	.930987	4.27	.069013	32
29	.812396	2.47	.881153	1.78	.931243	4.27	.068757	31
30	9.812544	2.47	9.881046	1.80	9.931499	4.27	0.068501	30
31	.812692	2.47	.880938	1.80	.931755	4.25	.068245	29
32	.812840	2.47	.880830	1.80	.932010	4.27	.067990	28
33	.812988	2.45	.880722	1.82	.932266	4.27	.067734	27
34	.813135	2.47	.880613	1.80	.932522	4.27	.067478	26
35	9.813283	2.45	9.880505	1.80	9.932778	4.25	0.067222	25
36	.813430	2.47	.880397	1.80	.933033	4.27	.066967	24
37	.813578	2.45	.880289	1.82	.933289	4.27	.066711	23
38	.813725	2.45	.880180	1.80	.933545	4.25	.066455	22
39	.813872	2.45	.880072	1.82	.933800	4.27	.066200	21
40	9.814019	2.45	9.879963	1.80	9.934056	4.25	0.065944	20
41	.814166	2.45	.879855	1.82	.934311	4.27	.065689	19
42	.814313	2.45	.879746	1.82	.934567	4.25	.065433	18
43	.814460	2.45	.879637	1.80	.934822	4.27	.065178	17
44	.814607	2.43	.879529	1.82	.935078	4.25	.064922	16
45	9.814753	2.45	9.879420	1.82	9.935333	4.27	0.064667	15
46	.814900	2.43	.879311	1.82	.935589	4.25	.064411	14
47	.815046	2.45	.879202	1.82	.935844	4.27	.064156	13
48	.815193	2.43	.879093	1.82	.936100	4.25	.063900	12
49	.815339	2.43	.878984	1.82	.936355	4.27	.063645	11
50	9.815485	2.45	9.878875	1.82	9.936611	4.25	0.063389	10
51	.815632	2.43	.878766	1.83	.936866	4.25	.063134	9
52	.815778	2.43	.878656	1.82	.937121	4.27	.062879	8
53	.815924	2.42	.878547	1.82	.937377	4.25	.062623	7
54	.816069	2.43	.878438	1.83	.937632	4.25	.062368	6
55	9.816215	2.43	9.878328	1.82	9.937887	4.25	0.062113	5
56	.816361	2.43	.878219	1.83	.938142	4.27	.061858	4
57	.816507	2.42	.878109	1.83	.938398	4.25	.061602	3
58	.816652	2.43	.877999	1.82	.938653	4.25	.061347	2
59	.816798	2.42	.877890	1.83	.938908	4.25	.061092	1
60	9.816943		9.877780		9.939163		0.060837	0
	Cos.	D. 1″.	Sin.	D. 1″.	Cot.	D. 1″.	Tan.	M.

130° 49°

LOGARITHMIC SINES, COSINES, TANGENTS, AND COTANGENTS

Sin.	D. 1″.	Cos.	D. 1″.	Tan.	D. 1″.	Cot.	
9.816943	2.42	9.877780	1.83	9.939163	4.25	0.060837	60
.817088	2.42	.877670	1.83	.939418	4.25	.060582	59
.817233	2.43	.877560	1.83	.939673	4.25	.060327	58
.817379	2.42	.877450	1.83	.939928	4.25	.060072	57
.817524	2.40	.877340	1.83	.940183	4.27	.059817	56
9.817668	2.42	9.877230	1.83	9.940439	4.25	0.059561	55
.817813	2.42	.877120	1.83	.940694	4.25	.059306	54
.817958	2.42	.877010	1.85	.940949	4.25	.059051	53
.818103	2.40	.876899	1.83	.941204	4.25	.058796	52
.818247	2.42	.876789	1.85	.941459	4.23	.058541	51
9.818392	2.40	9.876678	1.83	9.941713	4.25	0.058287	50
.818536	2.42	.876568	1.85	.941968	4.25	.058032	49
.818681	2.40	.876457	1.83	.942223	4.25	.057777	48
.818825	2.40	.876347	1.85	.942478	4.25	.057522	47
.818969	2.40	.876236	1.85	.942733	4.25	.057267	46
9.819113	2.40	9.876125	1.85	9.942988	4.25	0.057012	45
.819257	2.40	.876014	1.83	.943243	4.25	.056757	44
.819401	2.40	.875904	1.85	.943498	4.23	.056502	43
.819545	2.40	.875793	1.85	.943752	4.25	.056248	42
.819689	2.38	.875682	1.85	.944007	4.25	.055993	41
9.819832	2.40	9.875571	1.87	9.944262	4.25	0.055738	40
.819976	2.40	.875459	1.85	.944517	4.23	.055483	39
.820120	2.38	.875348	1.85	.944771	4.25	.055229	38
.820263	2.38	.875237	1.85	.945026	4.25	.054974	37
.820406	2.40	.875126	1.87	.945281	4.23	.054719	36
9.820550	2.38	9.875014	1.85	9.945535	4.25	0.054465	35
.820693	2.38	.874903	1.87	.945790	4.25	.054210	34
.820836	2.38	.874791	1.85	.946045	4.23	.053955	33
.820979	2.38	.874680	1.87	.946299	4.25	.053701	32
.821122	2.38	.874568	1.87	.946554	4.23	.053446	31
9.821265	2.37	9.874456	1.87	9.946808	4.25	0.053192	30
.821407	2.38	.874344	1.87	.947063	4.25	.052937	29
.821550	2.38	.874232	1.85	.947318	4.23	.052682	28
.821693	2.37	.874121	1.87	.947572	4.25	.052428	27
.821835	2.37	.874009	1.88	.947827	4.23	.052173	26
9.821977	2.38	9.873896	1.87	9.948081	4.23	0.051919	25
.822120	2.37	.873784	1.87	.948335	4.25	.051665	24
.822262	2.37	.873672	1.87	.948590	4.23	.051410	23
.822404	2.37	.873560	1.87	.948844	4.25	.051156	22
.822546	2.37	.873448	1.88	.949099	4.23	.050901	21
9.822688	2.37	9.873335	1.87	9.949353	4.25	0.050647	20
.822830	2.37	.873223	1.88	.949608	4.23	.050392	19
.822972	2.37	.873110	1.87	.949862	4.23	.050138	18
.823114	2.35	.872998	1.88	.950116	4.25	.049884	17
.823255	2.37	.872885	1.88	.950371	4.23	.049629	16
9.823397	2.37	9.872772	1.88	9.950625	4.23	0.049375	15
.823539	2.35	.872659	1.87	.950879	4.23	.049121	14
.823680	2.35	.872547	1.88	.951133	4.25	.048867	13
.823821	2.37	.872434	1.88	.951388	4.23	.048612	12
.823963	2.35	.872321	1.88	.951642	4.23	.048358	11
9.824104	2.35	9.872208	1.88	9.951896	4.23	0.048104	10
.824245	2.35	.872095	1.90	.952150	4.25	.047850	9
.824386	2.35	.871981	1.88	.952405	4.23	.047595	8
.824527	2.35	.871868	1.88	.952659	4.23	.047341	7
.824668	2.33	.871755	1.90	.952913	4.23	.047087	6
9.824808	2.35	9.871641	1.88	9.953167	4.23	0.046833	5
.824949	2.35	.871528	1.90	.953421	4.23	.046579	4
.825090	2.33	.871414	1.88	.953675	4.23	.046325	3
.825230	2.35	.871301	1.90	.953929	4.23	.046071	2
.825371	2.33	.871187	1.90	.954183	4.23	.045817	1
9.825511		9.871073		9.954437		0.045563	0
Cos.	D. 1″.	Sin.	D. 1″.	Cot.	D. 1″.	Tan.	M.

TABLE 55. — *Continued*

LOGARITHMIC SINES, COSINES, TANGENTS, AND COTANGENTS

42° 137°

M.	Sin.	D. 1″.	Cos.	D. 1″.	Tan.	D. 1″.	Cot.	
0	9.825511	2.33	9.871073	1.88	9.954437	4.23	0.045563	60
1	.825651	2.33	.870960	1.90	.954691	4.25	.045309	59
2	.825791	2.33	.870846	1.90	.954946	4.23	.045054	58
3	.825931	2.33	.870732	1.90	.955200	4.23	.044800	57
4	.826071	2.33	.870618	1.90	.955454	4.23	.044546	56
5	9.826211	2.33	9.870504	1.90	9.955708	4.22	0.044292	55
6	.826351	2.33	.870390	1.90	.955961	4.23	.044039	54
7	.826491	2.33	.870276	1.92	.956215	4.23	.043785	53
8	.826631	2.32	.870161	1.90	.956469	4.23	.043531	52
9	.826770	2.33	.870047	1.90	.956723	4.23	.043277	51
10	9.826910	2.32	9.869933	1.92	9.956977	4.23	0.043023	50
11	.827049	2.33	.869818	1.90	.957231	4.23	.042769	49
12	.827189	2.32	.869704	1.92	.957485	4.23	.042515	48
13	.827328	2.32	.869589	1.92	.957739	4.23	.042261	47
14	.827467	2.32	.869474	1.90	.957993	4.23	.042007	46
15	9.827606	2.32	9.869360	1.92	9.958247	4.22	0.041753	45
16	.827745	2.32	.869245	1.92	.958500	4.23	.041500	44
17	.827884	2.32	.869130	1.92	.958754	4.23	.041246	43
18	.828023	2.32	.869015	1.92	.959008	4.23	.040992	42
19	.828162	2.32	.868900	1.92	.959262	4.23	.040738	41
20	9.828301	2.30	9.868785	1.92	9.959516	4.22	0.040484	40
21	.828439	2.32	.868670	1.92	.959769	4.23	.040231	39
22	.828578	2.30	.868555	1.92	.960023	4.23	.039977	38
23	.828716	2.32	.868440	1.93	.960277	4.22	.039723	37
24	.828855	2.30	.868324	1.92	.960530	4.23	.039470	36
25	9.828993	2.30	9.868209	1.93	9.960784	4.23	0.039216	35
26	.829131	2.30	.868093	1.92	.961038	4.23	.038962	34
27	.829269	2.30	.867978	1.93	.961292	4.22	.038708	33
28	.829407	2.30	.867862	1.92	.961545	4.23	.038455	32
29	.829545	2.30	.867747	1.93	.961799	4.22	.038201	31
30	9.829683	2.30	9.867631	1.93	9.962052	4.23	0.037948	30
31	.829821	2.30	.867515	1.93	.962306	4.23	.037694	29
32	.829959	2.30	.867399	1.93	.962560	4.22	.037440	28
33	.830097	2.28	.867283	1.93	.962813	4.23	.037187	27
34	.830234	2.30	.867167	1.93	.963067	4.22	.036933	26
35	9.830372	2.28	9.867051	1.93	9.963320	4.23	0.036680	25
36	.830509	2.28	.866935	1.93	.963574	4.23	.036426	24
37	.830646	2.30	.866819	1.93	.963828	4.22	.036172	23
38	.830784	2.28	.866703	1.95	.964081	4.23	.035919	22
39	.830921	2.28	.866586	1.93	.964335	4.22	.035665	21
40	9.831058	2.28	9.866470	1.95	9.964588	4.23	0.035412	20
41	.831195	2.28	.866353	1.93	.964842	4.22	.035158	19
42	.831332	2.28	.866237	1.95	.965095	4.23	.034905	18
43	.831469	2.28	.866120	1.93	.965349	4.22	.034651	17
44	.831606	2.27	.866004	1.95	.965602	4.22	.034398	16
45	9.831742	2.28	9.865887	1.95	9.965855	4.23	0.034145	15
46	.831879	2.27	.865770	1.95	.966109	4.22	.033891	14
47	.832015	2.28	.865653	1.95	.966362	4.23	.033638	13
48	.832152	2.27	.865536	1.95	.966616	4.22	.033384	12
49	.832288	2.28	.865419	1.95	.966869	4.23	.033131	11
50	9.832425	2.27	9.865302	1.95	9.967123	4.22	0.032877	10
51	.832561	2.27	.865185	1.95	.967376	4.22	.032624	9
52	.832697	2.27	.865068	1.97	.967629	4.23	.032371	8
53	.832833	2.27	.864950	1.95	.967883	4.22	.032117	7
54	.832969	2.27	.864833	1.95	.968136	4.22	.031864	6
55	9.833105	2.27	9.864716	1.97	9.968389	4.23	0.031611	5
56	.833241	2.27	.864598	1.95	.968643	4.22	.031357	4
57	.833377	2.25	.864481	1.97	.968896	4.22	.031104	3
58	.833512	2.27	.864363	1.97	.969149	4.23	.030851	2
59	.833648	2.25	.864245	1.97	.969403	4.22	.030597	1
60	9.833783		9.864127		9.969656		0.030344	0
	Cos.	D. 1″.	Sin.	D. 1″.	Cot.	D. 1″.	Tan.	M.

132° 47°

Sin.	D. 1″.	Cos	D. 1″.	Tan.	D. 1″.	Cot.	
33783	2.27	9.864127	1.95	9.969656	4.22	0.030344	60
33919	2.25	.864010	1.97	.969909	4.23	.030091	59
34054	2.25	.863892	1.97	.970162	4.23	.029838	58
34189	2.27	.863774	1.97	.970416	4.22	.029584	57
34325	2.25	.863656	1.97	.970669	4.22	.029331	56
34460	2.25	9.863538	1.98	9.970922	4.22	0.029078	55
34595	2.25	.863419	1.97	.971175	4.23	.028825	54
34730	2.25	.863301	1.97	.971429	4.22	.028571	53
34865	2.23	.863183	1.98	.971682	4.22	.028318	52
34999	2.25	.863064	1.97	.971935	4.22	.028065	51
35134	2.25	9.862946	1.98	9.972188	4.22	0.027812	50
35269	2.23	.862827	1.97	.972441	4.23	.027559	49
35403	2.25	.862709	1.98	.972695	4.22	.027305	48
35538	2.23	.862590	1.98	.972948	4.22	.027052	47
35672	2.25	.862471	1.97	.973201	4.22	.026799	46
35807	2.23	9.862353	1.98	9.973454	4.22	0.026546	45
35941	2.23	.862234	1.98	.973707	4.22	.026293	44
36075	2.23	.862115	1.98	.973960	4.22	.026040	43
36209	2.23	.861996	1.98	.974213	4.22	.025787	42
36343	2.23	.861877	1.98	.974466	4.23	.025534	41
36477	2.23	9.861758	2.00	9.974720	4.22	0.025280	40
36611	2.23	.861638	1.98	.974973	4.22	.025027	39
36745	2.22	.861519	1.98	.975226	4.22	.024774	38
36878	2.23	.861400	2.00	.975479	4.22	.024521	37
37012	2.23	.861280	1.98	.975732	4.22	.024268	36
37146	2.22	9.861161	2.00	9.975985	4.22	0.024015	35
37279	2.22	.861041	1.98	.976238	4.22	.023762	34
37412	2.23	.860922	2.00	.976491	4.22	.023509	33
37546	2.22	.860802	2.00	.976744	4.22	.023256	32
37679	2.22	.860682	2.00	.976997	4.22	.023003	31
37812	2.22	9.860562	2.00	9.977250	4.22	0.022750	30
37945	2.22	.860442	2.00	.977503	4.22	.022497	29
38078	2.22	.860322	2.00	.977756	4.22	.022244	28
38211	2.22	.860202	2.00	.978009	4.22	.021991	27
38344	2.22	.860082	2.00	.978262	4.22	.021738	26
38477	2.22	9.859962	2.00	9.978515	4.22	0.021485	25
38610	2.20	.859842	2.02	.978768	4.22	.021232	24
38742	2.22	.859721	2.00	.979021	4.22	.020979	23
38875	2.20	.859601	2.02	.979274	4.22	.020726	22
39007	2.22	.859480	2.00	.979527	4.22	.020473	21
39140	2.20	9.859360	2.02	9.979780	4.22	0.020220	20
39272	2.20	.859239	2.00	.980033	4.22	.019967	19
39404	2.20	.859119	2.02	.980286	4.20	.019714	18
39536	2.20	.858998	2.02	.980538	4.22	.019462	17
39668	2.20	.858877	2.02	.980791	4.22	.019209	16
39800	2.20	9.858756	2.02	9.981044	4.22	0.018956	15
39932	2.20	.858635	2.02	.981297	4.22	.018703	14
40064	2.20	.858514	2.02	.981550	4.22	.018450	13
40196	2.20	.858393	2.02	.981803	4.22	.018197	12
40328	2.18	.858272	2.02	.982056	4.22	.017944	11
40459	2.20	9.858151	2.03	9.982309	4.22	0.017691	10
40591	2.18	.858029	2.02	.982562	4.20	.017438	9
40722	2.20	.857908	2.03	.982814	4.22	.017186	8
40854	2.18	.857786	2.02	.983067	4.22	.016933	7
40985	2.18	.857665	2.03	.983320	4.22	.016680	6
41116	2.18	9.857543	2.02	9.983573	4.22	0.016427	5
41247	2.18	.857422	2.03	.983826	4.22	.016174	4
41378	2.18	.857300	2.03	.984079	4.22	.015921	3
41509	2.18	.857178	2.03	.984332	4.20	.015668	2
41640	2.18	.857056	2.03	.984584	4.22	.015416	1
41771		9.856934		9.984837		0.015163	0
Cos.	D. 1″.	Sin.	D. 1″.	Cot.	D. 1″.	Tan.	M.

TABLE 55. — *Continued*

LOGARITHMIC SINES, COSINES, TANGENTS, AND COTANGENTS

44° 135°

M.	Sin.	D. 1″.	Cos.	D. 1″.	Tan.	D. 1″.	Cot.	
0	9.841771	2.18	9.856934	2.03	9.984837	4.22	0.015163	60
1	.841902	2.18	.856812	2.03	.985090	4.22	.014910	59
2	.842033	2.17	.856690	2.03	.985343	4.22	.014657	58
3	.842163	2.18	.856568	2.03	.985596	4.20	.014404	57
4	.842294	2.17	.856446	2.05	.985848	4.22	.014152	56
5	9.842424	2.18	9.856323	2.03	9.986101	4.22	0.013899	55
6	.842555	2.17	.856201	2.05	.986354	4.22	.013646	54
7	.842685	2.17	.856078	2.03	.986607	4.22	.013393	53
8	.842815	2.18	.855956	2.05	.986860	4.20	.013140	52
9	.842946	2.17	.855833	2.03	.987112	4.22	.012888	51
10	9.843076	2.17	9.855711	2.05	9.987365	4.22	0.012635	50
11	.843206	2.17	.855588	2.05	.987618	4.22	.012382	49
12	.843336	2.17	.855465	2.05	.987871	4.20	.012129	48
13	.843466	2.15	.855342	2.05	.988123	4.22	.011877	47
14	.843595	2.17	.855219	2.05	.988376	4.22	.011624	46
15	9.843725	2.17	9.855096	2.05	9.988629	4.22	0.011371	45
16	.843855	2.15	.854973	2.05	.988882	4.20	.011118	44
17	.843984	2.17	.854850	2.05	.989134	4.22	.010866	43
18	.844114	2.15	.854727	2.07	.989387	4.22	.010613	42
19	.844243	2.15	.854603	2.05	.989640	4.22	.010360	41
20	9.844372	2.17	9.854480	2.07	9.989893	4.20	0.010107	40
21	.844502	2.15	.854356	2.05	.990145	4.22	.009855	39
22	.844631	2.15	.854233	2.07	.990398	4.22	.009602	38
23	.844760	2.15	.854109	2.05	.990651	4.20	.009349	37
24	.844889	2.15	.853986	2.07	.990903	4.22	.009097	36
25	9.845018	2.15	9.853862	2.07	9.991156	4.22	0.008844	35
26	.845147	2.15	.853738	2.07	.991409	4.22	.008591	34
27	.845276	2.15	.853614	2.07	.991662	4.20	.008338	33
28	.845405	2.13	.853490	2.07	.991914	4.22	.008086	32
29	.845533	2.15	.853366	2.07	.992167	4.22	.007833	31
30	9.845662	2.13	9.853242	2.07	9.992420	4.20	0.007580	30
31	.845790	2.15	.853118	2.07	.992672	4.22	.007328	29
32	.845919	2.13	.852994	2.08	.992925	4.22	.007075	28
33	.846047	2.13	.852869	2.07	.993178	4.22	.006822	27
34	.846175	2.15	.852745	2.08	.993431	4.20	.006569	26
35	9.846304	2.13	9.852620	2.07	9.993683	4.22	0.006317	25
36	.846432	2.13	.852496	2.08	.993936	4.22	.006064	24
37	.846560	2.13	.852371	2.07	.994189	4.20	.005811	23
38	.846688	2.13	.852247	2.08	.994441	4.22	.005559	22
39	.846816	2.13	.852122	2.08	.994694	4.22	.005306	21
40	9.846944	2.12	9.851997	2.08	9.994947	4.20	0.005053	20
41	.847071	2.13	.851872	2.08	.995199	4.22	.004801	19
42	.847199	2.13	.851747	2.08	.995452	4.22	.004548	18
43	.847327	2.12	.851622	2.08	.995705	4.20	.004295	17
44	.847454	2.13	.851497	2.08	.995957	4.22	.004043	16
45	9.847582	2.12	9.851372	2.10	9.996210	4.22	0.003790	15
46	.847709	2.12	.851246	2.08	.996463	4.20	.003537	14
47	.847836	2.13	.851121	2.08	.996715	4.22	.003285	13
48	.847964	2.12	.850996	2.10	.996968	4.22	.003032	12
49	.848091	2.12	.850870	2.08	.997221	4.20	.002779	11
50	9.848218	2.12	9.850745	2.10	9.997473	4.22	0.002527	10
51	.848345	2.12	.850619	2.10	.997726	4.22	.002274	9
52	.848472	2.12	.850493	2.08	.997979	4.20	.002021	8
53	.848599	2.12	.850368	2.10	.998231	4.22	.001769	7
54	.848726	2.10	.850242	2.10	.998484	4.22	.001516	6
55	9.848852	2.12	9.850116	2.10	9.998737	4.20	0.001263	5
56	.848979	2.12	.849990	2.10	.998989	4.22	.001011	4
57	.849106	2.10	.849864	2.10	.999242	4.22	.000758	3
58	.849232	2.12	.849738	2.12	.999495	4.20	.000505	2
59	.849359	2.10	.849611	2.10	.999747	4.22	.000253	1
60	9.849485		9.849485		0.000000		0.000000	0
	Cos.	D. 1″.	Sin.	D. 1″.	Cot.	D. 1″.	Tan.	M.

134° 45°

TABLE 56

AUXILIARY TABLE FOR LOGARITHMIC SINES AND TANGENTS OF SMALL ANGLES

	0°			1°			2°			
M.	S.	Sin.	Tan.	S.	Sin.	Tan.	S.	Sin.	Tan.	M.
		4.68			4.68			4.68		
0	0	5575	5575	3600	5553	5619	7200	5487	5751	0
1	60	5575	5575	3660	5552	5620	7260	5485	5754	1
2	120	5575	5575	3720	5551	5622	7320	5484	5757	2
3	180	5575	5575	3780	5551	5623	7380	5482	5760	3
4	240	5575	5575	3840	5550	5625	7440	5481	5763	4
5	300	5575	5575	3900	5549	5627	7500	5479	5766	5
6	360	5575	5575	3960	5548	5628	7560	5478	5769	6
7	420	5575	5575	4020	5547	5630	7620	5476	5773	7
8	480	5574	5576	4080	5547	5632	7680	5475	5776	8
9	540	5574	5576	4140	5546	5633	7740	5473	5779	9
10	600	5574	5576	4200	5545	5635	7800	5471	5782	10
11	660	5574	5576	4260	5544	5637	7860	5470	5785	11
12	720	5574	5577	4320	5543	5638	7920	5468	5788	12
13	780	5574	5577	4380	5542	5640	7980	5467	5792	13
14	840	5574	5577	4440	5541	5642	8040	5465	5795	14
15	900	5573	5578	4500	5540	5644	8100	5463	5798	15
16	960	5573	5578	4560	5539	5646	8160	5462	5802	16
17	1020	5573	5578	4620	5539	5648	8220	5460	5805	17
18	1080	5573	5579	4680	5538	5649	8280	5458	5808	18
19	1140	5573	5579	4740	5537	5651	8340	5457	5812	19
20	1200	5572	5580	4800	5536	5653	8400	5455	5815	20
21	1260	5572	5580	4860	5535	5655	8460	5453	5818	21
22	1320	5572	5581	4920	5534	5657	8520	5451	5822	22
23	1380	5572	5581	4980	5533	5659	8580	5450	5825	23
24	1440	5571	5582	5040	5532	5661	8640	5448	5829	24
25	1500	5571	5583	5100	5531	5663	8700	5446	5833	25
26	1560	5571	5583	5160	5530	5665	8760	5444	5836	26
27	1620	5570	5584	5220	5529	5668	8820	5443	5840	27
28	1680	5570	5584	5280	5527	5670	8880	5441	5843	28
29	1740	5570	5585	5340	5526	5672	8940	5439	5847	29
30	1800	5569	5586	5400	5525	5674	9000	5437	5851	30
31	1860	5569	5587	5460	5524	5676	9060	5435	5854	31
32	1920	5569	5587	5520	5523	5679	9120	5433	5858	32
33	1980	5568	5588	5580	5522	5681	9180	5431	5862	33
34	2040	5568	5589	5640	5521	5683	9240	5430	5866	34
35	2100	5567	5590	5700	5520	5685	9300	5428	5869	35
36	2160	5567	5591	5760	5518	5688	9360	5426	5873	36
37	2220	5566	5592	5820	5517	5690	9420	5424	5877	37
38	2280	5566	5593	5880	5516	5693	9480	5422	5881	38
39	2340	5566	5593	5940	5515	5695	9540	5420	5885	39
40	2400	5565	5594	6000	5514	5697	9600	5418	5889	40
41	2460	5565	5595	6060	5512	5700	9660	5416	5893	41
42	2520	5564	5596	6120	5511	5702	9720	5414	5897	42
43	2580	5564	5598	6180	5510	5705	9780	5412	5900	43
44	2640	5563	5599	6240	5509	5707	9840	5410	5905	44
45	2700	5562	5600	6300	5507	5710	9900	5408	5909	45
46	2760	5562	5601	6360	5506	5713	9960	5406	5913	46
47	2820	5561	5602	6420	5505	5715	10020	5404	5917	47
48	2880	5561	5603	6480	5503	5718	10080	5402	5921	48
49	2940	5560	5604	6540	5502	5720	10140	5400	5925	49
50	3000	5560	5605	6600	5501	5723	10200	5398	5929	50
51	3060	5559	5607	6660	5499	5726	10260	5396	5933	51
52	3120	5558	5608	6720	5498	5729	10320	5394	5937	52
53	3180	5558	5609	6780	5497	5731	10380	5392	5942	53
54	3240	5557	5611	6840	5495	5734	10440	5389	5946	54
55	3300	5556	5612	6900	5494	5737	10500	5387	5950	55
56	3360	5556	5613	6960	5492	5740	10560	5385	5955	56
57	3420	5555	5615	7020	5491	5743	10620	5383	5959	57
58	3480	5554	5616	7080	5490	5745	10680	5381	5963	58
59	3540	5554	5618	7140	5488	5748	10740	5379	5968	59
60	3600	5553	5619	7200	5487	5751	10800	5376	5972	60
M.	S.	Sin.	Tan.	S.	Sin.	Tan.	S.	Sin.	Tan.	

TABLE 56.—*Continued*

AUXILIARY TABLE FOR LOGARITHMIC SINES AND TANGENTS OF SMALL ANGLES

	3°			4°			5°			
M.	S.	Sin.	Tan.	S.	Sin.	Tan.	S.	Sin.	Tan.	M.
		4.68			4.68			4.68		
0	10800	5376	5972	14400	5222	6281	18000	5024	6679	0
1	10860	5374	5976	14460	5219	6287	18060	5020	6687	1
2	10920	5372	5981	14520	5216	6293	18120	5016	6694	2
3	10980	5370	5985	14580	5213	6299	18180	5012	6702	3
4	11040	5367	5990	14640	5210	6305	18240	5009	6709	4
5	11100	5365	5994	14700	5207	6311	18300	5005	6716	5
6	11160	5363	5999	14760	5204	6317	18360	5001	6724	6
7	11220	5361	6004	14820	5201	6323	18420	4997	6732	7
8	11280	5358	6008	14880	5198	6329	18480	4994	6739	8
9	11340	5356	6013	14940	5195	6335	18540	4990	6747	9
10	11400	5354	6017	15000	5192	6341	18600	4986	6754	10
11	11460	5351	6022	15060	5189	6348	18660	4982	6762	11
12	11520	5349	6027	15120	5186	6354	18720	4978	6770	12
13	11580	5347	6031	15180	5183	6360	18780	4975	6777	13
14	11640	5344	6036	15240	5180	6366	18840	4971	6785	14
15	11700	5342	6041	15300	5177	6372	18900	4967	6793	15
16	11760	5340	6046	15360	5173	6379	18960	4963	6800	16
17	11820	5337	6051	15420	5170	6385	19020	4959	6808	17
18	11880	5335	6055	15480	5167	6391	19080	4955	6816	18
19	11940	5332	6060	15540	5164	6398	19140	4951	6824	19
20	12000	5330	6065	15600	5161	6404	19200	4948	6832	20
21	12060	5327	6070	15660	5158	6410	19260	4944	6840	21
22	12120	5325	6075	15720	5154	6417	19320	4940	6848	22
23	12180	5322	6080	15780	5151	6423	19380	4936	6855	23
24	12240	5320	6085	15840	5148	6430	19440	4932	6863	24
25	12300	5317	6090	15900	5145	6436	19500	4928	6871	25
26	12360	5315	6095	15960	5141	6443	19560	4924	6879	26
27	12420	5312	6100	16020	5138	6449	19620	4920	6887	27
28	12480	5310	6105	16080	5135	6456	19680	4916	6896	28
29	12540	5307	6110	16140	5132	6463	19740	4912	6904	29
30	12600	5305	6116	16200	5128	6469	19800	4908	6912	30
31	12660	5302	6121	16260	5125	6476	19860	4904	6920	31
32	12720	5300	6126	16320	5122	6482	19920	4900	6928	32
33	12780	5297	6131	16380	5118	6489	19980	4895	6936	33
34	12840	5294	6136	16440	5115	6496	20040	4891	6944	34
35	12900	5292	6142	16500	5112	6503	20100	4887	6953	35
36	12960	5289	6147	16560	5108	6509	20160	4883	6961	36
37	13020	5286	6152	16620	5105	6516	20220	4880	6969	37
38	13080	5284	6158	16680	5101	6523	20280	4875	6977	38
39	13140	5281	6163	16740	5098	6530	20340	4871	6986	39
40	13200	5278	6168	16800	5095	6537	20400	4867	6994	40
41	13260	5276	6174	16860	5091	6544	20460	4862	7003	41
42	13320	5273	6179	16920	5088	6551	20520	4858	7011	42
43	13380	5270	6185	16980	5084	6557	20580	4854	7019	43
44	13440	5268	6190	17040	5081	6564	20640	4850	7028	44
45	13500	5265	6196	17100	5077	6571	20700	4846	7036	45
46	13560	5262	6201	17160	5074	6578	20760	4841	7045	46
47	13620	5259	6207	17220	5070	6585	20820	4837	7053	47
48	13680	5256	6212	17280	5067	6593	20880	4833	7062	48
49	13740	5254	6218	17340	5063	6600	20940	4829	7070	49
50	13800	5251	6224	17400	5060	6607	21000	4824	7079	50
51	13860	5248	6229	17460	5056	6614	21060	4820	7088	51
52	13920	5245	6235	17520	5053	6621	21120	4816	7096	52
53	13980	5242	6241	17580	5049	6628	21180	4811	7105	53
54	14040	5239	6246	17640	5045	6635	21240	4807	7114	54
55	14100	5237	6252	17700	5042	6643	21300	4803	7122	55
56	14160	5234	6258	17760	5038	6650	21360	4798	7131	56
57	14220	5231	6264	17820	5034	6657	21420	4794	7140	57
58	14280	5228	6269	17880	5031	6665	21480	4790	7149	58
59	14340	5225	6275	17940	5027	6672	21540	4785	7158	59
60	14400	5222	6281	18000	5024	6679	21600	4781	7166	60
M.	S.	Sin.	Tan.	S.	Sin.	Tan.	S.	Sin.	Tan.	M.

TABLE 57

LOGARITHMIC VERSED SINES AND EXTERNAL SECANTS

0°					1°				
M.	Vers.	D. 1″.	Exsec.	D. 1″.	M.	Vers.	D. 1″.	Exsec.	D. 1″.
0	∞		∞		0	6.182714	239.28	6.182780	239.32
1	2.626422	10034.33	2.626422	10034.33	1	.197071	235.38	.197139	235.42
2	3.228482	5869.72	3.228482	5869.72	2	.211194	231.62	.211264	231.67
3	.580665	4164.62	.580665	4164.62	3	.225091	227.98	.225164	228.02
4	.830542	3230.33	.830542	3230.35	4	.238770	224.43	.238845	224.48
5	4.024362	2639.38	4.024363	2639.37	5	6.252236	221.02	6.252314	221.05
6	.182725	2231.55	.182725	2231.57	6	.265497	217.68	.265577	217.73
7	.316618	1933.07	.316619	1933.07	7	.278558	214.47	.278641	214.50
8	.432602	1705.08	.432603	1705.08	8	.291426	211.33	.291511	211.37
9	.534907	1525.25	.534908	1525.27	9	.304106	208.28	.304193	208.33
10	4.626422	1379.75	4.626424	1379.75	10	6.316603	205.33	6.316693	205.38
11	.709207	1259.62	.709209	1259.63	11	.328923	202.47	.329016	202.52
12	.784784	1158.73	.784787	1158.75	12	.341071	199.68	.341167	199.72
13	.854308	1072.83	.854312	1072.82	13	.353052	196.95	.353150	197.00
14	.918678	998.77	.918681	998.78	14	.364869	194.32	.364970	194.35
15	4.978604	934.28	4.978608	934.30	15	6.376528	191.73	6.376631	191.78
16	5.034661	877.63	5.034666	877.65	16	.388032	189.23	.388138	189.27
17	.087319	827.45	.087325	827.45	17	.399386	186.78	.399494	186.85
18	.136966	782.70	.136972	782.72	18	.410593	184.40	.410705	184.45
19	.183928	742.55	.183935	742.55	19	.421657	182.10	.421772	182.13
20	5.228481	706.30	5.228488	706.33	20	6.432583	179.82	6.432700	179.88
21	.270859	673.45	.270868	673.45	21	.443372	177.62	.443493	177.67
22	.311266	643.50	.311275	643.52	22	.454029	175.47	.454153	175.52
23	.349876	616.12	.349886	616.13	23	.464557	173.37	.464684	173.42
24	.386843	590.95	.386854	590.97	24	.474959	171.32	.475089	171.37
25	5.422300	567.78	5.422312	567.78	25	6.485238	169.30	6.485371	169.35
26	.456367	546.35	.456379	546.37	26	.495396	167.37	.495532	167.42
27	.489148	526.47	.485161	526.48	27	.505438	165.43	.505577	165.48
28	.520736	508.00	.520750	508.02	28	.515364	163.57	.515506	163.63
29	.551216	490.77	.551231	490.80	29	.525178	161.73	.525324	161.78
30	5.580662	474.68	5.580679	474.68	30	6.534882	159.97	6.535031	160.02
31	.609143	459.60	.609160	459.63	31	.544480	158.20	.544632	158.27
32	.636719	445.47	.636738	445.48	32	.553972	156.50	.554128	156.55
33	.663447	432.17	.663467	432.18	33	.563362	154.82	.563521	154.87
34	.689377	419.63	.689398	419.65	34	.572651	153.18	.572813	153.25
35	5.714555	407.80	5.714577	407.83	35	6.581842	151.57	6.582008	151.63
36	.739023	396.63	.739047	396.67	36	.590936	150.02	.591106	150.07
37	.762821	386.07	.762847	386.08	37	.599937	148.47	.600110	148.52
38	.785985	376.03	.786012	376.05	38	.608845	146.97	.609021	147.03
39	.808547	366.50	.808575	366.53	39	.617663	145.48	.617843	145.53
40	5.830537	357.47	5.830567	357.48	40	6.626392	144.03	6.626575	144.10
41	.851985	348.83	.852016	348.87	41	.635034	142.62	.635221	142.68
42	.872915	340.63	.872948	340.65	42	.643591	141.22	.643782	141.28
43	.893353	332.82	.893387	332.83	43	.652064	139.87	.652259	139.93
44	.913322	325.32	.913357	325.35	44	.660456	138.52	.660655	138.58
45	5.932841	318.17	5.932878	318.20	45	6.668767	137.22	6.668970	137.27
46	.951931	311.33	.951970	311.37	46	.677000	135.92	.677206	135.97
47	.970611	304.78	.970652	304.80	47	.685155	134.65	.685365	134.72
48	.988898	298.48	.988940	298.52	48	.693234	133.42	.693448	133.48
49	6.006807	292.47	6.006851	292.50	49	.701239	132.20	.701457	132.27
50	6.024355	286.67	6.024401	286.68	50	6.709171	130.98	6.709393	131.07
51	.041555	281.10	.041602	281.13	51	.717030	129.82	.717257	129.88
52	.058421	275.73	.058470	275.78	52	.724820	128.67	.725050	128.75
53	.074965	270.60	.075017	270.62	53	.732540	127.53	.732775	127.60
54	.091201	265.62	.091254	265.67	54	.740192	126.42	.740431	126.48
55	6.107138	260.85	6.107194	260.87	55	6.747777	125.33	6.748020	125.40
56	.122789	256.22	.122846	256.27	56	.755297	124.25	.755544	124.33
57	.138162	251.77	.138222	251.80	57	.762752	123.20	.763004	123.27
58	.153268	247.47	.153330	247.50	58	.770144	122.15	.770400	122.22
59	.168116	243.30	.168180	243.33	59	.777473	121.13	.777733	121.20
60	6.182714		6.182780		60	6.784741		6.785005	

TABLE 57. — *Continued*

LOGARITHMIC VERSED SINES AND EXTERNAL SECANTS

2°					3°				
M.	Vers.	D. 1″.	Exsec.	D. 1″.	M.	Vers.	D. 1″.	Exsec.	D. 1″.
0	6.784741	120.12	6.785005	120.20	0	7.136868	80.18	7.137464	80.28
1	.791948	119.13	.792217	119.22	1	.141679	79.75	.142281	79.85
2	.799096	118.17	.799370	118.23	2	.146464	79.30	.147072	79.42
3	.806186	117.22	.806464	117.28	3	.151222	78.87	.151837	79.00
4	.813219	116.25	.813501	116.35	4	.155954	78.45	.156577	78.55
5	6.820194	115.35	6.820482	115.40	5	7.160661	78.02	7.161290	78.13
6	.827115	114.42	.827406	114.52	6	.165342	77.60	.165978	77.72
7	.833980	113.53	.834277	113.60	7	.169998	77.20	.170641	77.30
8	.840792	112.65	.841093	112.73	8	.174630	76.77	.175279	76.90
9	.847551	111.77	.847857	111.85	9	.179236	76.38	.179893	76.50
10	6.854257	110.92	6.854568	111.00	10	7.183819	75.97	7.184483	76.08
11	.860912	110.08	.861228	110.15	11	.188377	75.58	.189048	75.68
12	.867517	109.23	.867837	109.32	12	.192912	75.18	.193589	75.32
13	.874071	108.43	.874396	108.52	13	.197423	74.78	.198108	74.90
14	.880577	107.62	.880907	107.70	14	.201910	74.42	.202602	74.53
15	6.887034	106.82	6.887369	106.90	15	7.206375	74.03	7.207074	74.15
16	.893443	106.05	.893783	106.13	16	.210817	73.65	.211523	73.77
17	.899806	105.27	.900151	105.35	17	.215236	73.28	.215949	73.40
18	.906122	104.52	.906472	104.60	18	.219633	72.90	.220353	73.03
19	.912393	103.75	.912748	103.85	19	.224007	72.55	.224735	72.67
20	6.918618	103.03	6.918979	103.10	20	7.228360	72.18	7.229095	72.30
21	.924800	102.28	.925165	102.38	21	.232691	71.82	.233433	71.95
22	.930937	101.58	.931308	101.67	22	.237000	71.47	.237750	71.60
23	.937032	100.87	.937408	100.95	23	.241288	71.12	.242046	71.23
24	.943084	100.17	.943465	100.25	24	.245555	70.77	.246320	70.90
25	6.949094	99.48	6.949480	99.57	25	7.249801	70.43	7.250574	70.55
26	.955063	98.80	.955454	98.90	26	.254027	70.08	.254807	70.20
27	.960991	98.13	.961388	98.22	27	.258232	69.73	.259019	69.88
28	.966879	97.47	.967281	97.57	28	.262416	69.42	.263212	69.53
29	.972727	96.82	.973135	96.90	29	.266581	69.08	.267384	69.22
30	6.978536	96.17	6.978949	96.27	30	7.270726	68.75	7.271537	68.87
31	.984306	95.55	.984725	95.63	31	.274851	68.42	.275669	68.57
32	.990039	94.90	.990463	95.02	32	.278956	68.12	.279783	68.23
33	.995733	94.30	.996164	94.38	33	.283043	67.78	.283877	67.92
34	7.001391	93.68	7.001827	93.78	34	.287110	67.47	.287952	67.58
35	7.007012	93.08	7.007454	93.17	35	7.291158	67.15	7.292007	67.30
36	.012597	92.48	.013044	92.58	36	.295187	66.83	.296045	66.97
37	.018146	91.90	.018599	92.00	37	.299197	66.55	.300063	66.67
38	.023660	91.32	.024119	91.42	38	.303190	66.23	.304063	66.37
39	.029139	90.75	.029604	90.83	39	.307164	65.92	.308045	66.07
40	7.034584	90.18	7.035054	90.28	40	7.341119	65.63	7.312009	65.77
41	.039995	89.62	.040471	89.72	41	.315057	65.33	.315955	65.47
42	.045372	89.07	.045854	89.17	42	.318977	65.05	.319883	65.18
43	.050716	88.53	.051204	88.63	43	.322880	64.75	.323794	64.88
44	.056028	87.98	.056522	88.08	44	.326765	64.45	.327687	64.60
45	7.061307	87.45	7.061807	87.57	45	7.330632	64.18	7.331563	64.32
46	.066554	86.93	.067061	87.02	46	.334483	63.88	.335422	64.03
47	.071770	86.40	.072282	86.52	47	.338316	63.62	.339264	63.75
48	.076954	85.90	.077473	86.00	48	.342133	63.33	.343089	63.47
49	.082108	85.40	.082633	85.50	49	.345933	63.05	.346897	63.20
50	7.087232	84.88	7.087763	84.98	50	7.349716	62.78	7.350689	62.92
51	.092325	84.40	.092862	84.50	51	.353483	62.50	.354464	62.65
52	.097389	83.90	.097932	84.02	52	.357233	62.25	.358223	62.38
53	.102423	83.42	.102973	83.53	53	.360968	61.97	.361966	62.12
54	.107428	82.95	.107985	83.05	54	.364686	61.72	.365693	61.85
55	7.112405	82.47	7.112968	82.57	55	7.368389	61.45	7.369404	61.60
56	.117353	82.00	.117922	82.12	56	.372076	61.18	.373100	61.33
57	.122273	81.53	.122849	81.65	57	.375747	60.93	.376780	61.07
58	.127165	81.08	.127748	81.18	58	.379403	60.67	.380444	60.83
59	.132030	80.63	.132619	80.75	59	.383043	60.42	.384094	60.57
60	7.136868		7.137464		60	7.386668		7.387728	

TABLE 57. — *Continued*

LOGARITHMIC VERSED SINES AND EXTERNAL SECANTS

4°					5°				
M.	Vers.	D. 1″.	Exsec.	D. 1″.	M.	Vers.	D. 1″.	Exsec.	D. 1″.
0	7.386668	60.17	7.387728	60.32	0	7.580389	48.15	7.582045	48.33
1	.390278	59.93	.391347	60.07	1	.583278	47.98	.584945	48.17
2	.393874	59.67	.394951	59.82	2	.586157	47.82	.587835	48.00
3	.397454	59.43	.398540	59.57	3	.589026	47.67	.590715	47.87
4	.401020	59.18	.402114	59.33	4	.591886	47.52	.593587	47.70
5	7.404571	58.93	7.405674	59.10	5	7.594737	47.35	7.596449	47.53
6	.408107	58.70	.409220	58.85	6	.597578	47.20	.599301	47.38
7	.411629	58.47	.412751	58.62	7	.600410	47.05	.602144	47.25
8	.415137	58.23	.416268	58.38	8	.603233	46.90	.604979	47.08
9	.418631	58.00	.419771	58.15	9	.606047	46.73	.607804	46.92
10	7.422111	57.77	7.423260	57.92	10	7.608851	46.60	7.610619	46.78
11	.425577	57.53	.426735	57.70	11	.611647	46.43	.613426	46.63
12	.429029	57.30	.430197	57.45	12	.614433	46.30	.616224	46.48
13	.432467	57.08	.433644	57.25	13	.617211	46.15	.619013	46.35
14	.435892	56.85	.437079	57.00	14	.619980	45.98	.621794	46.18
15	7.439303	56.63	7.440499	56.80	15	7.622739	45.87	7.624565	46.05
16	.442701	56.42	.443907	56.57	16	.625491	45.70	.627328	45.90
17	.446086	56.20	.447301	56.35	17	.628233	45.57	.630082	45.75
18	.449458	55.97	.450682	56.13	18	.630967	45.42	.632827	45.62
19	.452816	55.77	.454050	55.92	19	.633692	45.28	.635564	45.48
20	7.456162	55.55	7.457405	55.72	20	7.636409	45.13	7.638293	45.33
21	.459495	55.33	.460748	55.48	21	.639117	44.98	.641013	45.18
22	.462815	55.12	.464077	55.28	22	.641816	44.87	.643724	45.07
23	.466122	54.92	.467394	55.08	23	.644508	44.72	.646428	44.90
24	.469417	54.70	.470699	54.87	24	.647191	44.57	.649122	44.78
25	7.472699	54.50	7.473991	54.65	25	7.649865	44.45	7.651809	44.65
26	.475969	54.28	.477270	54.47	26	.652532	44.30	.654488	44.50
27	.479226	54.10	.480538	54.25	27	.655190	44.17	.657158	44.37
28	.482472	53.88	.483793	54.05	28	.657840	44.05	.659820	44.23
29	.485705	53.70	.487036	53.85	29	.660483	43.90	.662474	44.12
30	7.488927	53.48	7.490267	53.67	30	7.663117	43.77	7.665121	43.97
31	.492136	53.28	.493487	53.45	31	.665743	43.63	.667759	43.83
32	.495333	53.10	.496694	53.27	32	.668361	43.50	.670389	43.72
33	.498519	52.90	.499890	53.07	33	.670971	43.38	.673012	43.57
34	.501693	52.72	.503074	52.88	34	.673574	43.23	.675626	43.45
35	7.504856	52.52	7.506247	52.68	35	7.676168	43.12	7.678233	43.33
36	.508007	52.33	.509408	52.50	36	.678755	42.98	.680833	43.18
37	.511147	52.13	.512558	52.32	37	.681334	42.87	.683424	43.07
38	.514275	51.95	.515697	52.12	38	.683906	42.73	.686008	42.95
39	.517392	51.77	.518824	51.93	39	.686470	42.60	.688585	42.82
40	7.520498	51.58	7.521940	51.77	40	7.689026	42.48	7.691154	42.68
41	.523593	51.40	.525046	51.57	41	.691575	42.35	.693715	42.57
42	.526677	51.22	.528140	51.38	42	.694116	42.23	.696269	42.43
43	.529750	51.03	.531223	51.22	43	.696650	42.12	.698815	42.33
44	.532812	50.85	.534296	51.02	44	.699177	41.98	.701355	42.20
45	7.535863	50.68	7.537357	50.85	45	7.701696	41.87	7.703887	42.07
46	.538904	50.50	.540408	50.68	46	.704208	41.73	.706411	41.97
47	.541934	50.32	.543449	50.50	47	.706712	41.63	.708929	41.83
48	.544953	50.15	.546479	50.33	48	.709210	41.50	.711439	41.72
49	.547962	49.98	.549499	50.15	49	.711700	41.38	.713942	41.60
50	7.550961	49.80	7.552508	49.98	50	7.714183	41.27	7.716438	41.48
51	.553949	49.63	.555507	49.80	51	.716659	41.15	.718927	41.37
52	.556927	49.47	.558495	49.65	52	.719128	41.03	.721409	41.25
53	.559895	49.28	.561474	49.47	53	.721590	40.92	.723884	41.13
54	.562852	49.13	.564442	49.32	54	.724045	40.80	.726352	41.02
55	7.565800	48.95	7.567401	49.13	55	7.726493	40.68	7.728813	40.90
56	.568737	48.80	.570349	48.98	56	.728934	40.57	.731267	40.78
57	.571665	48.63	.573288	48.82	57	.731368	40.47	.733714	40.68
58	.574583	48.47	.576217	48.65	58	.733796	40.33	.736155	40.57
59	.577491	48.30	.579136	48.48	59	.736216	40.23	.738589	40.45
60	7.580389		7.582045		60	7.738630		7.741016	

TABLE 57.—*Continued*

LOGARITHMIC VERSED SINES AND EXTERNAL SECANTS

6°					7°				
M.	Vers.	D. 1″.	Exsec.	D. 1″.	M.	Vers.	D. 1″.	Exsec.	D. 1″.
0	7.738630	40.13	7.741016	40.33	0	7.872381	34.38	7.875630	34.63
1	.741038	40.00	.743436	40.23	1	.874444	34.30	.877708	34.57
2	.743438	39.90	.745850	40.13	2	.876502	34.22	.879782	34.48
3	.745832	39.78	.748258	40.00	3	.878555	34.13	.881851	34.40
4	.748219	39.68	.750658	39.90	4	.880603	34.07	.883915	34.32
5	7.750600	39.57	7.753052	39.80	5	7.882647	33.98	7.885974	34.25
6	.752974	39.47	.755440	39.68	6	.884686	33.90	.888029	34.15
7	.755342	39.35	.757821	39.58	7	.886720	33.82	.890078	34.08
8	.757703	39.25	.760196	39.48	8	.888749	33.73	.892123	34.02
9	.760058	39.13	.762565	39.37	9	.890773	33.67	.894164	33.92
10	7.762406	39.05	7.764927	39.25	10	7.892793	33.58	7.896199	33.85
11	.764749	38.92	.767282	39.17	11	.894808	33.50	.898230	33.77
12	.767084	38.83	.769632	39.05	12	.896818	33.43	.900256	33.70
13	.769414	38.72	.771975	38.95	13	.898824	33.35	.902278	33.62
14	.771737	38.62	.774312	38.85	14	.900825	33.27	.904295	33.53
15	7.774054	38.52	7.776643	38.75	15	7.902821	33.20	7.906307	33.47
16	.776365	38.42	.778968	38.63	16	.904813	33.12	.908315	33.40
17	.778670	38.30	.781286	38.55	17	.906800	33.05	.910319	33.30
18	.780968	38.22	.783599	38.43	18	.908783	32.97	.912317	33.25
19	.783261	38.10	.785905	38.35	19	.910761	32.90	.914312	33.17
20	7.785547	38.02	7.788206	38.23	20	7.912735	32.82	7.916302	33.08
21	.787828	37.90	.790500	38.15	21	.914704	32.73	.918287	33.02
22	.790102	37.82	.792789	38.03	22	.916668	32.68	.920268	32.95
23	.792371	37.70	.795071	37.95	23	.918629	32.58	.922245	32.87
24	.794633	37.62	.797348	37.85	24	.920584	32.53	.924217	32.78
25	7.796890	37.52	7.799619	37.75	25	7.922536	32.45	7.926184	32.73
26	.799141	37.40	.801884	37.65	26	.924483	32.37	.928148	32.65
27	.801385	37.33	.804143	37.57	27	.926425	32.32	.930107	32.58
28	.803625	37.22	.806397	37.45	28	.928364	32.22	.932062	32.50
29	.805858	37.13	.808644	37.37	29	.930297	32.17	.934012	32.43
30	7.808086	37.03	7.810886	37.28	30	7.932227	32.08	7.935958	32.37
31	.810308	36.93	.813123	37.17	31	.934152	32.02	.937900	32.30
32	.812524	36.83	.815353	37.08	32	.936073	31.95	.939838	32.23
33	.814734	36.75	.817578	37.00	33	.937990	31.88	.941772	32.15
34	.816939	36.67	.819798	36.90	34	.939903	31.80	.943701	32.08
35	7.819139	36.55	7.822012	36.80	35	7.941811	31.73	7.945626	32.02
36	.821332	36.48	.824220	36.72	36	.943715	31.67	.947547	31.95
37	.823521	36.37	.826423	36.62	37	.945615	31.60	.949464	31.87
38	.825703	36.28	.828620	36.53	38	.947511	31.52	.951376	31.82
39	.827880	36.20	.830812	36.45	39	.949402	31.47	.953285	31.73
40	7.830052	36.10	7.832999	36.35	40	7.951290	31.38	7.955189	31.68
41	.832218	36.02	.835180	36.27	41	.953173	31.32	.957090	31.60
42	.834379	35.93	.837356	36.17	42	.955052	31.27	.958986	31.53
43	.836535	35.83	.839526	36.08	43	.956928	31.18	.960878	31.48
44	.838685	35.75	.841691	36.00	44	.958799	31.12	.962767	31.40
45	7.840830	35.65	7.843851	35.90	45	7.960666	31.05	7.964651	31.33
46	.842969	35.58	.846005	35.83	46	.962529	30.98	.966531	31.28
47	.845104	35.48	.848155	35.73	47	.964388	30.92	.968408	31.20
48	.847233	35.40	.850299	35.63	48	.966243	30.85	.970280	31.13
49	.849357	35.30	.852437	35.57	49	.968094	30.78	.972148	31.08
50	7.851475	35.23	7.854571	35.48	50	7.969941	30.73	7.974013	31.02
51	.853589	35.13	.856700	35.38	51	.971785	30.65	.975874	30.93
52	.855697	35.05	.858823	35.32	52	.973624	30.58	.977730	30.88
53	.857800	34.97	.860942	35.22	53	.975459	30.53	.979583	30.82
54	.859898	34.88	.863055	35.13	54	.977291	30.45	.981432	30.75
55	7.861991	34.80	7.865163	35.05	55	7.979118	30.40	7.983277	30.70
56	.864079	34.72	.867266	34.98	56	.980942	30.33	.985119	30.62
57	.866162	34.63	.869365	34.88	57	.982762	30.27	.986956	30.57
58	.868240	34.55	.871458	34.80	58	.984578	30.22	.988790	30.50
59	.870313	34.47	.873546	34.73	59	.986391	30.13	.990620	30.43
60	7.872381		7.875630		60	7.988199		7.992446	

TABLE 57.—*Continued*

LOGARITHMIC VERSED SINES AND EXTERNAL SECANTS

8°					9°				
M.	Vers.	D. 1″.	Exsec.	D. 1″.	M.	Vers.	D. 1″.	Exsec.	D. 1″.
0	7.988199	30.08	7.992446	30.38	0	8.090317	26.72	8.095697	27.05
1	.990004	30.02	.994269	30.32	1	.091920	26.68	.097320	27.02
2	.991805	29.95	.996088	30.25	2	.093521	26.63	.098941	26.97
3	.993602	29.88	.997903	30.18	3	.095119	26.58	.100559	26.92
4	.995395	29.83	.999714	30.13	4	.096714	26.52	.102174	26.87
5	7.997185	29.77	8.001522	30.07	5	8.098305	26.48	8.103786	26.82
6	.998971	29.72	.003326	30.00	6	.099894	26.43	.105395	26.77
7	8.000754	29.63	.005126	29.95	7	.101480	26.40	.107001	26.73
8	.002532	29.60	.006923	29.88	8	.103064	26.33	.108605	26.67
9	.004308	29.52	.008716	29.83	9	.104644	26.28	.110205	26.63
10	8.006079	29.47	8.010506	29.77	10	8.106221	26.25	8.111803	26.58
11	.007847	29.40	.012292	29.70	11	.107796	26.18	.113398	26.53
12	.009611	29.35	.014074	29.65	12	.109367	26.15	.114990	26.48
13	.011372	29.28	.015853	29.58	13	.110936	26.10	.116579	26.45
14	.013129	29.22	.017628	29.53	14	.112502	26.05	.118166	26.38
15	8.014882	29.17	8.019400	29.47	15	8.114065	26.00	8.119749	26.35
16	.016632	29.10	.021168	29.42	16	.115625	25.95	.121330	26.30
17	.018378	29.05	.022933	29.35	17	.117182	25.92	.122908	26.25
18	.020121	29.00	.024694	29.30	18	.118737	25.87	.124483	26.22
19	.021861	28.93	.026452	29.23	19	.120289	25.82	.126056	26.17
20	8.023597	28.87	8.028206	29.18	20	8.121838	25.77	8.127626	26.12
21	.025329	28.82	.029957	29.13	21	.123384	25.72	.129193	26.07
22	.027058	28.75	.031705	29.07	22	.124927	25.68	.130757	26.02
23	.028783	28.70	.033449	29.00	23	.126468	25.63	.132318	25.98
24	.030505	28.65	.035189	28.97	24	.128006	25.58	.133877	25.93
25	8.032224	28.58	8.036927	28.90	25	8.129541	25.55	8.135433	25.90
26	.033939	28.53	.038661	28.83	26	.131074	25.50	.136987	25.85
27	.035651	28.47	.040391	28.78	27	.132604	25.45	.138538	25.80
28	.037359	28.42	.042118	28.73	28	.134131	25.40	.140086	25.75
29	.039064	28.37	.043842	28.68	29	.135655	25.37	.141631	25.72
30	8.040766	28.30	8.045563	28.62	30	8.137177	25.32	8.143174	25.67
31	.042464	28.25	.047280	28.57	31	.138696	25.27	.144714	25.63
32	.044159	28.20	.048994	28.50	32	.140212	25.23	.146252	25.58
33	.045851	28.13	.050704	28.47	33	.141726	25.18	.147787	25.53
34	.047539	28.08	.052412	28.40	34	.143237	25.13	.149319	25.50
35	8.049224	28.03	8.054116	28.35	35	8.144745	25.10	8.150849	25.45
36	.050906	27.98	.055817	28.28	36	.146251	25.05	.152376	25.40
37	.052585	27.92	.057514	28.25	37	.147754	25.02	.153900	25.37
38	.054260	27.87	.059209	28.18	38	.149255	24.95	.155422	25.33
39	.055932	27.82	.060900	28.13	39	.150752	24.93	.156942	25.27
40	8.057601	27.75	8.062588	28.08	40	8.152248	24.88	8.158458	25.25
41	.059266	27.72	.064273	28.03	41	.153741	24.83	.159973	25.18
42	.060929	27.65	.065955	27.97	42	.155231	24.78	.161484	25.17
43	.062588	27.60	.067633	27.93	43	.156718	24.75	.162994	25.10
44	.064244	27.55	.069309	27.87	44	.158203	24.72	.164500	25.07
45	8.065897	27.48	8.070981	27.82	45	8.159686	24.67	8.166004	25.03
46	.067546	27.45	.072650	27.77	46	.161166	24.62	.167506	24.98
47	.069193	27.38	.074316	27.72	47	.162643	24.58	.169005	24.95
48	.070836	27.33	.075979	27.67	48	.164118	24.53	.170502	24.90
49	.072476	27.30	.077639	27.60	49	.165590	24.50	.171996	24.87
50	8.074114	27.23	8.079295	27.57	50	8.167060	24.45	8.173488	24.82
51	.075748	27.18	.080949	27.52	51	.168527	24.42	.174977	24.78
52	.077379	27.13	.082600	27.45	52	.169992	24.37	.176464	24.73
53	.079007	27.07	.084247	27.42	53	.171454	24.33	.177948	24.70
54	.080631	27.03	.085892	27.37	54	.172914	24.30	.179430	24.65
55	8.082253	26.98	8.087534	27.30	55	8.174372	24.25	8.180909	24.62
56	.083872	26.93	.089172	27.27	56	.175827	24.20	.182386	24.58
57	.085488	26.87	.090808	27.20	57	.177279	24.17	.183861	24.53
58	.087100	26.83	.092440	27.17	58	.178729	24.13	.185333	24.50
59	.088710	26.78	.094070	27.12	59	.180177	24.08	.186803	24.47
60	8.090317		8.095697		60	8.181622		8.188271	

TABLE 57. — *Continued*

LOGARITHMIC VERSED SINES AND EXTERNAL SECANTS

2°					3°				
M.	Vers.	D. 1″.	Exsec.	D. 1″.	M.	Vers.	D. 1″.	Exsec.	D. 1″.
0	6.784741	120.12	6.785005	120.20	0	7.136868	80.18	7.137464	80.28
1	.791948	119.13	.792217	119.22	1	.141679	79.75	.142281	79.85
2	.799096	118.17	.799370	118.23	2	.146464	79.30	.147072	79.42
3	.806186	117.22	.806464	117.28	3	.151222	78.87	.151837	79.00
4	.813219	116.25	.813501	116.35	4	.155954	78.45	.156577	78.55
5	6.820194	115.35	6.820482	115.40	5	7.160661	78.02	7.161290	78.13
6	.827115	114.42	.827406	114.52	6	.165342	77.60	.165978	77.72
7	.833980	113.53	.834277	113.60	7	.169998	77.20	.170641	77.30
8	.840792	112.65	.841093	112.73	8	.174630	76.77	.175279	76.90
9	.847551	111.77	.847857	111.85	9	.179236	76.38	.179893	76.50
10	6.854257	110.92	6.854568	111.00	10	7.183819	75.97	7.184483	76.08
11	.860912	110.08	.861228	110.15	11	.188377	75.58	.189048	75.68
12	.867517	109.23	.867837	109.32	12	.192912	75.18	.193589	75.32
13	.874071	108.43	.874396	108.52	13	.197423	74.78	.198108	74.90
14	.880577	107.62	.880907	107.70	14	.201910	74.42	.202602	74.53
15	6.887034	106.82	6.887369	106.90	15	7.206375	74.03	7.207074	74.15
16	.893443	106.05	.893783	106.13	16	.210817	73.65	.211523	73.77
17	.899806	105.27	.900151	105.35	17	.215236	73.28	.215949	73.40
18	.906122	104.52	.906472	104.60	18	.219633	72.90	.220353	73.03
19	.912393	103.75	.912748	103.85	19	.224007	72.55	.224735	72.67
20	6.918618	103.03	6.918979	103.10	20	7.228360	72.18	7.229095	72.30
21	.924800	102.28	.925165	102.38	21	.232691	71.82	.233433	71.95
22	.930937	101.58	.931308	101.67	22	.237000	71.47	.237750	71.60
23	.937032	100.87	.937408	100.95	23	.241288	71.12	.242046	71.23
24	.943084	100.17	.943465	100.25	24	.245555	70.77	.246320	70.90
25	6.949094	99.48	6.949480	99.57	25	7.249801	70.43	7.250574	70.55
26	.955063	98.80	.955454	98.90	26	.254027	70.08	.254807	70.20
27	.960991	98.13	.961388	98.22	27	.258232	69.73	.259019	69.88
28	.966879	97.47	.967281	97.57	28	.262416	69.42	.263212	69.53
29	.972727	96.82	.973135	96.90	29	.266581	69.08	.267384	69.22
30	6.978536	96.17	6.978949	96.27	30	7.270726	68.75	7.271537	68.87
31	.984306	95.55	.984725	95.63	31	.274851	68.42	.275669	68.57
32	.990039	94.90	.990463	95.02	32	.278956	68.12	.279783	68.23
33	.995733	94.30	.996164	94.38	33	.283043	67.78	.283877	67.92
34	7.001391	93.68	7.001827	93.78	34	.287110	67.47	.287952	67.58
35	7.007012	93.08	7.007454	93.17	35	7.291158	67.15	7.292007	67.30
36	.012597	92.48	.013044	92.58	36	.295187	66.83	.296045	66.97
37	.018146	91.90	.018599	92.00	37	.299197	66.55	.300063	66.67
38	.023660	91.32	.024119	91.42	38	.303190	66.23	.304063	66.37
39	.029139	90.75	.029604	90.83	39	.307164	65.92	.308045	66.07
40	7.034584	90.18	7.035054	90.28	40	7.311119	65.63	7.312009	65.77
41	.039995	89.62	.040471	89.72	41	.315057	65.33	.315955	65.47
42	.045372	89.07	.045854	89.17	42	.318977	65.05	.319883	65.18
43	.050716	88.53	.051204	88.63	43	.322880	64.75	.323794	64.88
44	.056028	87.98	.056522	88.08	44	.326765	64.45	.327687	64.60
45	7.061307	87.45	7.061807	87.57	45	7.330632	64.18	7.331563	64.32
46	.066554	86.93	.067061	87.02	46	.334483	63.88	.335422	64.03
47	.071770	86.40	.072282	86.52	47	.338316	63.62	.339264	63.75
48	.076954	85.90	.077473	86.00	48	.342133	63.33	.343089	63.47
49	.082108	85.40	.082633	85.50	49	.345933	63.05	.346897	63.20
50	7.087232	84.88	7.087763	84.98	50	7.349716	62.78	7.350689	62.92
51	.092325	84.40	.092862	84.50	51	.353483	62.50	.354464	62.65
52	.097389	83.90	.097932	84.02	52	.357233	62.25	.358223	62.38
53	.102423	83.42	.102973	83.53	53	.360968	61.97	.361966	62.12
54	.107428	82.95	.107985	83.05	54	.364686	61.72	.365693	61.85
55	7.112405	82.47	7.112968	82.57	55	7.368389	61.45	7.369404	61.60
56	.117353	82.00	.117922	82.12	56	.372076	61.18	.373100	61.33
57	.122273	81.53	.122849	81.65	57	.375747	60.93	.376780	61.07
58	.127165	81.08	.127748	81.18	58	.379403	60.67	.380444	60.83
59	.132030	80.63	.132619	80.75	59	.383043	60.42	.384094	60.57
60	7.136868		7.137464		60	7.386668		7.387728	

TABLE 57. — *Continued*

LOGARITHMIC VERSED SINES AND EXTERNAL SECANTS

4°					5°				
M.	Vers.	D. 1″.	Exsec.	D. 1″.	M.	Vers.	D. 1″.	Exsec.	D. 1″.
0	7.386668	60.17	7.387728	60.32	0	7.580389	48.15	7.582045	48.33
1	.390278	59.93	.391347	60.07	1	.583278	47.98	.584945	48.17
2	.393874	59.67	.394951	59.82	2	.586157	47.82	.587835	48.00
3	.397454	59.43	.398540	59.57	3	.589026	47.67	.590715	47.87
4	.401020	59.18	.402114	59.33	4	.591886	47.52	.593587	47.70
5	7.404571	58.93	7.405674	59.10	5	7.594737	47.35	7.596449	47.53
6	.408107	58.70	.409220	58.85	6	.597578	47.20	.599301	47.38
7	.411629	58.47	.412751	58.62	7	.600410	47.05	.602144	47.25
8	.415137	58.23	.416268	58.38	8	.603233	46.90	.604979	47.08
9	.418631	58.00	.419771	58.15	9	.606047	46.73	.607804	46.92
10	7.422111	57.77	7.423260	57.92	10	7.608851	46.60	7.610619	46.78
11	.425577	57.53	.426735	57.70	11	.611647	46.43	.613426	46.63
12	.429029	57.30	.430197	57.45	12	.614433	46.30	.616224	46.48
13	.432467	57.08	.433644	57.25	13	.617211	46.15	.619013	46.35
14	.435892	56.85	.437079	57.00	14	.619980	45.98	.621794	46.18
15	7.439303	56.63	7.440499	56.80	15	7.622739	45.87	7.624565	46.05
16	.442701	56.42	.443907	56.57	16	.625491	45.70	.627328	45.90
17	.446086	56.20	.447301	56.35	17	.628233	45.57	.630082	45.75
18	.449458	55.97	.450682	56.13	18	.630967	45.42	.632827	45.62
19	.452816	55.77	.454050	55.92	19	.633692	45.28	.635564	45.48
20	7.456162	55.55	7.457405	55.72	20	7.636409	45.13	7.638293	45.33
21	.459495	55.33	.460748	55.48	21	.639117	44.98	.641013	45.18
22	.462815	55.12	.464077	55.28	22	.641816	44.87	.643724	45.07
23	.466122	54.92	.467394	55.08	23	.644508	44.72	.646428	44.90
24	.469417	54.70	.470699	54.87	24	.647191	44.57	.649122	44.78
25	7.472699	54.50	7.473991	54.65	25	7.649865	44.45	7.651809	44.65
26	.475969	54.28	.477270	54.47	26	.652532	44.30	.654488	44.50
27	.479226	54.10	.480538	54.25	27	.655190	44.17	.657158	44.37
28	.482472	53.88	.483793	54.05	28	.657840	44.05	.659820	44.23
29	.485705	53.70	.487036	53.85	29	.660483	43.90	.662474	44.12
30	7.488927	53.48	7.490267	53.67	30	7.663117	43.77	7.665121	43.97
31	.492136	53.28	.493487	53.45	31	.665743	43.63	.667759	43.83
32	.495333	53.10	.496694	53.27	32	.668361	43.50	.670389	43.72
33	.498519	52.90	.499890	53.07	33	.670971	43.38	.673012	43.57
34	.501693	52.72	.503074	52.88	34	.673574	43.23	.675626	43.45
35	7.504856	52.52	7.506247	52.68	35	7.676168	43.12	7.678233	43.33
36	.508007	52.33	.509408	52.50	36	.678755	42.98	.680833	43.18
37	.511147	52.13	.512558	52.32	37	.681334	42.87	.683424	43.07
38	.514275	51.95	.515697	52.12	38	.683906	42.73	.686008	42.95
39	.517392	51.77	.518824	51.93	39	.686470	42.60	.688585	42.82
40	7.520498	51.58	7.521940	51.77	40	7.689026	42.48	7.691154	42.68
41	.523593	51.40	.525046	51.57	41	.691575	42.35	.693715	42.57
42	.526677	51.22	.528140	51.38	42	.694116	42.23	.696269	42.43
43	.529750	51.03	.531223	51.22	43	.696650	42.12	.698815	42.33
44	.532812	50.85	.534296	51.02	44	.699177	41.98	.701355	42.20
45	7.535863	50.68	7.537357	50.85	45	7.701696	41.87	7.703887	42.07
46	.538904	50.50	.540408	50.68	46	.704208	41.73	.706411	41.97
47	.541934	50.32	.543449	50.50	47	.706712	41.63	.708929	41.83
48	.544953	50.15	.546479	50.33	48	.709210	41.50	.711439	41.72
49	.547962	49.98	.549499	50.15	49	.711700	41.38	.713942	41.60
50	7.550961	49.80	7.552508	49.98	50	7.714183	41.27	7.716438	41.48
51	.553949	49.63	.555507	49.80	51	.716659	41.15	.718927	41.37
52	.556927	49.47	.558495	49.65	52	.719128	41.03	.721409	41.25
53	.559895	49.28	.561474	49.47	53	.721590	40.92	.723884	41.13
54	.562852	49.13	.564442	49.32	54	.724045	40.80	.726352	41.02
55	7.565800	48.95	7.567401	49.13	55	7.726493	40.68	7.728813	40.90
56	.568737	48.80	.570349	48.98	56	.728934	40.57	.731267	40.78
57	.571665	48.63	.573288	48.82	57	.731368	40.47	.733714	40.68
58	.574583	48.47	.576217	48.65	58	.733795	40.33	.736155	40.57
59	.577491	48.30	.579136	48.48	59	.736216	40.23	.738589	40.45
60	7.580389		7.582045		60	7.738630		7.741016	

TABLE 57. — *Continued*

LOGARITHMIC VERSED SINES AND EXTERNAL SECANTS

6°					7°				
M.	Vers.	D. 1″.	Exsec.	D. 1″.	M.	Vers.	D. 1″.	Exsec.	D. 1″.
0	7.738630	40.13	7.741016	40.33	0	7.872381	34.38	7.875630	34.63
1	.741038	40.00	.743436	40.23	1	.874444	34.30	.877708	34.57
2	.743438	39.90	.745850	40.13	2	.876502	34.22	.879782	34.48
3	.745832	39.78	.748258	40.00	3	.878555	34.13	.881851	34.40
4	.748219	39.68	.750658	39.90	4	.880603	34.07	.883915	34.32
5	7.750600	39.57	7.753052	39.80	5	7.882647	33.98	7.885974	34.25
6	.752974	39.47	.755440	39.68	6	.884686	33.90	.888029	34.15
7	.755342	39.35	.757821	39.58	7	.886720	33.82	.890078	34.08
8	.757703	39.25	.760196	39.48	8	.888749	33.73	.892123	34.02
9	.760058	39.13	.762565	39.37	9	.890773	33.67	.894164	33.92
10	7.762406	39.05	7.764927	39.25	10	7.892793	33.58	7.896199	33.85
11	.764749	38.92	.767282	39.17	11	.894808	33.50	.898230	33.77
12	.767084	38.83	.769632	39.05	12	.896818	33.43	.900256	33.70
13	.769414	38.72	.771975	38.95	13	.898824	33.35	.902278	33.62
14	.771737	38.62	.774312	38.85	14	.900825	33.27	.904295	33.53
15	7.774054	38.52	7.776643	38.75	15	7.902821	33.20	7.906307	33.47
16	.776365	38.42	.778968	38.63	16	.904813	33.12	.908315	33.40
17	.778670	38.30	.781286	38.55	17	.906800	33.05	.910319	33.30
18	.780968	38.22	.783599	38.43	18	.908783	32.97	.912317	33.25
19	.783261	38.10	.785905	38.35	19	.910761	32.90	.914312	33.17
20	7.785547	38.02	7.788206	38.23	20	7.912735	32.82	7.916302	33.08
21	.787828	37.90	.790500	38.15	21	.914704	32.73	.918287	33.02
22	.790102	37.82	.792789	38.03	22	.916668	32.68	.920268	32.95
23	.792371	37.70	.795071	37.95	23	.918629	32.58	.922245	32.87
24	.794633	37.62	.797348	37.85	24	.920584	32.53	.924217	32.78
25	7.796890	37.52	7.799619	37.75	25	7.922536	32.45	7.926184	32.73
26	.799141	37.40	.801884	37.65	26	.924483	32.37	.928148	32.65
27	.801385	37.33	.804143	37.57	27	.926425	32.32	.930107	32.58
28	.803625	37.22	.806397	37.45	28	.928364	32.22	.932062	32.50
29	.805858	37.13	.808644	37.37	29	.930297	32.17	.934012	32.43
30	7.808086	37.03	7.810886	37.28	30	7.932227	32.08	7.935958	32.37
31	.810308	36.93	.813123	37.17	31	.934152	32.02	.937900	32.30
32	.812524	36.83	.815353	37.08	32	.936073	31.95	.939838	32.23
33	.814734	36.75	.817578	37.00	33	.937990	31.88	.941772	32.15
34	.816939	36.67	.819798	36.90	34	.939903	31.80	.943701	32.08
35	7.819139	36.55	7.822012	36.80	35	7.941811	31.73	7.945626	32.02
36	.821332	36.48	.824220	36.72	36	.943715	31.67	.947547	31.95
37	.823521	36.37	.826423	36.62	37	.945615	31.60	.949464	31.87
38	.825703	36.28	.828620	36.53	38	.947511	31.52	.951376	31.82
39	.827880	36.20	.830812	36.45	39	.949402	31.47	.953285	31.73
40	7.830052	36.10	7.832999	36.35	40	7.951290	31.38	7.955189	31.68
41	.832218	36.02	.835180	36.27	41	.953173	31.32	.957090	31.60
42	.834379	35.93	.837356	36.17	42	.955052	31.27	.958986	31.53
43	.836535	35.83	.839526	36.08	43	.956928	31.18	.960878	31.48
44	.838685	35.75	.841691	36.00	44	.958799	31.12	.962767	31.40
45	7.840830	35.65	7.843851	35.90	45	7.960666	31.05	7.964651	31.33
46	.842969	35.58	.846005	35.83	46	.962529	30.98	.966531	31.28
47	.845104	35.48	.848155	35.73	47	.964388	30.92	.968408	31.20
48	.847233	35.40	.850299	35.63	48	.966243	30.85	.970280	31.13
49	.849357	35.30	.852437	35.57	49	.968094	30.78	.972148	31.08
50	7.851475	35.23	7.854571	35.48	50	7.969941	30.73	7.974013	31.02
51	.853589	35.13	.856700	35.38	51	.971785	30.65	.975874	30.93
52	.855697	35.05	.858823	35.32	52	.973624	30.58	.977730	30.88
53	.857800	34.97	.860942	35.22	53	.975459	30.53	.979583	30.82
54	.859898	34.88	.863055	35.13	54	.977291	30.45	.981432	30.75
55	7.861991	34.80	7.865163	35.05	55	7.979118	30.40	7.983277	30.70
56	.864079	34.72	.867266	34.98	56	.980942	30.33	.985119	30.62
57	.866162	34.63	.869365	34.88	57	.982762	30.27	.986956	30.57
58	.868240	34.55	.871458	34.80	58	.984578	30.22	.988790	30.50
59	.870313	34.47	.873546	34.73	59	.986391	30.13	.990620	30.43
60	7.872381		7.875630		60	7.988199		7.992446	

TABLE 57.—*Continued*

LOGARITHMIC VERSED SINES AND EXTERNAL SECANTS

8°					9°				
M.	Vers.	D. 1″.	Exsec.	D. 1″.	M.	Vers.	D. 1″.	Exsec.	D. 1″.
0	7.988199	30.08	7.992446	30.38	0	8.090317	26.72	8.095697	27.05
1	.990004	30.02	.994269	30.32	1	.091920	26.68	.097320	27.02
2	.991805	29.95	.996088	30.25	2	.093521	26.63	.098941	26.97
3	.993602	29.88	.997903	30.18	3	.095119	26.58	.100559	26.92
4	.995395	29.83	.999714	30.13	4	.096714	26.52	.102174	26.87
5	7.997185	29.77	8.001522	30.07	5	8.098305	26.48	8.103786	26.82
6	.998971	29.72	.003326	30.00	6	.099894	26.43	.105395	26.77
7	8.000754	29.63	.005126	29.95	7	.101480	26.40	.107001	26.73
8	.002532	29.60	.006923	29.88	8	.103064	26.33	.108605	26.67
9	.004308	29.52	.008716	29.83	9	.104644	26.28	.110205	26.63
10	8.006079	29.47	8.010506	29.77	10	8.106221	26.25	8.111803	26.58
11	.007847	29.40	.012292	29.70	11	.107796	26.18	.113398	26.53
12	.009611	29.35	.014074	29.65	12	.109367	26.15	.114990	26.48
13	.011372	29.28	.015853	29.58	13	.110936	26.10	.116579	26.45
14	.013129	29.22	.017628	29.53	14	.112502	26.05	.118166	26.38
15	8.014882	29.17	8.019400	29.47	15	8.114065	26.00	8.119749	26.35
16	.016632	29.10	.021168	29.42	16	.115625	25.95	.121330	26.30
17	.018378	29.05	.022933	29.35	17	.117182	25.92	.122908	26.25
18	.020121	29.00	.024694	29.30	18	.118737	25.87	.124483	26.22
19	.021861	28.93	.026452	29.23	19	.120289	25.82	.126056	26.17
20	8.023597	28.87	8.028206	29.18	20	8.121838	25.77	8.127626	26.12
21	.025329	28.82	.029957	29.13	21	.123384	25.72	.129193	26.07
22	.027058	28.75	.031705	29.07	22	.124927	25.68	.130757	26.02
23	.028783	28.70	.033449	29.00	23	.126468	25.63	.132318	25.98
24	.030505	28.65	.035189	28.97	24	.128006	25.58	.133877	25.93
25	8.032224	28.58	8.036927	28.90	25	8.129541	25.55	8.135433	25.90
26	.033939	28.53	.038661	28.83	26	.131074	25.50	.136987	25.85
27	.035651	28.47	.040391	28.78	27	.132604	25.45	.138538	25.80
28	.037359	28.42	.042118	28.73	28	.134131	25.40	.140086	25.75
29	.039064	28.37	.043842	28.68	29	.135655	25.37	.141631	25.72
30	8.040766	28.30	8.045563	28.62	30	8.137177	25.32	8.143174	25.67
31	.042464	28.25	.047280	28.57	31	.138696	25.27	.144714	25.63
32	.044159	28.20	.048994	28.50	32	.140212	25.23	.146252	25.58
33	.045851	28.13	.050704	28.47	33	.141726	25.18	.147787	25.53
34	.047539	28.08	.052412	28.40	34	.143237	25.13	.149319	25.50
35	8.049224	28.03	8.054116	28.35	35	8.144745	25.10	8.150849	25.45
36	.050906	27.98	.055817	28.28	36	.146251	25.05	.152376	25.40
37	.052585	27.92	.057514	28.25	37	.147754	25.02	.153900	25.37
38	.054260	27.87	.059209	28.18	38	.149255	24.95	.155422	25.33
39	.055932	27.82	.060900	28.13	39	.150752	24.93	.156942	25.27
40	8.057601	27.75	8.062588	28.08	40	8.152248	24.88	8.158458	25.25
41	.059266	27.72	.064273	28.03	41	.153741	24.83	.159973	25.18
42	.060929	27.65	.065955	27.97	42	.155231	24.78	.161484	25.17
43	.062588	27.60	.067633	27.93	43	.156718	24.75	.162994	25.10
44	.064244	27.55	.069309	27.87	44	.158203	24.72	.164500	25.07
45	8.065897	27.48	8.070981	27.82	45	8.159686	24.67	8.166004	25.03
46	.067546	27.45	.072650	27.77	46	.161166	24.62	.167506	24.98
47	.069193	27.38	.074316	27.72	47	.162643	24.58	.169005	24.95
48	.070836	27.33	.075979	27.67	48	.164118	24.53	.170502	24.90
49	.072476	27.30	.077639	27.60	49	.165590	24.50	.171996	24.87
50	8.074114	27.23	8.079295	27.57	50	8.167060	24.45	8.173488	24.82
51	.075748	27.18	.080949	27.52	51	.168527	24.42	.174977	24.78
52	.077379	27.13	.082600	27.45	52	.169992	24.37	.176464	24.73
53	.079007	27.07	.084247	27.42	53	.171454	24.33	.177948	24.70
54	.080631	27.03	.085892	27.37	54	.172914	24.30	.179430	24.65
55	8.082253	26.98	8.087534	27.30	55	8.174372	24.25	8.180909	24.62
56	.083872	26.93	.089172	27.27	56	.175827	24.20	.182386	24.58
57	.085488	26.87	.090808	27.20	57	.177279	24.17	.183861	24.53
58	.087100	26.83	.092440	27.17	58	.178729	24.13	.185333	24.50
59	.088710	26.78	.094070	27.12	59	.180177	24.08	.186803	24.47
60	8.090317		8.095697		60	8.181622		8.188271	

TABLE 57. — *Continued*

LOGARITHMIC VERSED SINES AND EXTERNAL SECANTS

10°					11°				
M.	Vers.	D. 1″.	Exsec.	D. 1″.	M.	Vers.	D. 1″.	Exsec.	D. 1″.
0	8.181622	24.05	8.188271	24.42	0	8.264176	21.85	8.272229	22.27
1	.183065	24.00	.189736	24.37	1	.265487	21.82	.273565	22.22
2	.184505	23.97	.191198	24.35	2	.266796	21.78	.274898	22.20
3	.185943	23.93	.192659	24.30	3	.268103	21.75	.276230	22.17
4	.187379	23.88	.194117	24.25	4	.269408	21.72	.277560	22.13
5	8.188812	23.85	8.195572	24.22	5	8.270711	21.68	8.278888	22.08
6	.190243	23.80	.197025	24.18	6	.272012	21.65	.280213	22.07
7	.191671	23.77	.198476	24.15	7	.273311	21.62	.281537	22.03
8	.193097	23.73	.199925	24.10	8	.274608	21.58	.282859	22.00
9	.194521	23.68	.201371	24.07	9	.275903	21.57	.284179	21.98
10	8.195942	23.65	8.202815	24.03	10	8.277197	21.52	8.285498	21.93
11	.197361	23.62	.204257	23.98	11	.278488	21.48	.286814	21.90
12	.198778	23.57	.205696	23.95	12	.279777	21.47	.288128	21.88
13	.200192	23.53	.207133	23.92	13	.281065	21.42	.289441	21.83
14	.201604	23.50	.208568	23.88	14	.282350	21.40	.290751	21.82
15	8.203014	23.45	8.210001	23.83	15	8.283634	21.37	8.292060	21.78
16	.204421	23.42	.211431	23.80	16	.284916	21.33	.293367	21.75
17	.205826	23.38	.212859	23.77	17	.286196	21.28	.294672	21.72
18	.207229	23.35	.214285	23.72	18	.287473	21.27	.295975	21.68
19	.208630	23.30	.215708	23.70	19	.288749	21.25	.297276	21.67
20	8.210028	23.27	8.217130	23.65	20	8.290024	21.20	8.298576	21.62
21	.211424	23.23	.218549	23.62	21	.291296	21.17	.299873	21.60
22	.212818	23.18	.219966	23.57	22	.292566	21.15	.301169	21.57
23	.214209	23.17	.221380	23.55	23	.293835	21.10	.302463	21.53
24	.215599	23.12	.222793	23.50	24	.295101	21.08	.303755	21.50
25	8.216986	23.08	8.224203	23.47	25	8.296366	21.05	8.305045	21.48
26	.218371	23.03	.225611	23.43	26	.297629	21.02	.306334	21.43
27	.219753	23.00	.227017	23.40	27	.298890	20.98	.307620	21.42
28	.221133	22.98	.228421	23.35	28	.300149	20.95	.308905	21.38
29	.222512	22.93	.229822	23.32	29	.301406	20.93	.310188	21.35
30	8.223888	22.88	8.231221	23.30	30	8.302662	20.90	8.311469	21.33
31	.225261	22.87	.232619	23.25	31	.303916	20.85	.312749	21.28
32	.226633	22.82	.234014	23.22	32	.305167	20.85	.314026	21.27
33	.228002	22.78	.235407	23.17	33	.306418	20.80	.315302	21.23
34	.229369	22.77	.236797	23.15	34	.307666	20.77	.316576	21.20
35	8.230735	22.70	8.238186	23.10	35	8.308912	20.75	8.317848	21.18
36	.232097	22.68	.239572	23.08	36	.310157	20.72	.319119	21.15
37	.233458	22.65	.240957	23.03	37	.311400	20.68	.320388	21.12
38	.234817	22.60	.242339	23.00	38	.312641	20.65	.321655	21.08
39	.236173	22.57	.243719	22.97	39	.313880	20.62	.322920	21.05
40	8.237527	22.55	8.245097	22.93	40	8.315117	20.60	8.324183	21.03
41	.238880	22.50	.246473	22.90	41	.316353	20.57	.325445	21.00
42	.240230	22.47	.247847	22.87	42	.317587	20.53	.326705	20.98
43	.241578	22.43	.249219	22.83	43	.318819	20.50	.327964	20.93
44	.242924	22.38	.250589	22.80	44	.320049	20.48	.329220	20.91
45	8.244267	22.37	8.251957	22.75	45	8.321278	20.45	8.330475	20.88
46	.245609	22.32	.253322	22.73	46	.322505	20.42	.331728	20.87
47	.246948	22.30	.254686	22.68	47	.323730	20.38	.332980	20.82
48	.248286	22.25	.256047	22.67	48	.324953	20.37	.334229	20.80
49	.249621	22.23	.257407	22.62	49	.326175	20.33	.335477	20.78
50	8.250955	22.18	8.258764	22.60	50	8.327395	20.30	8.336724	20.73
51	.254286	22.15	.260120	22.55	51	.328613	20.27	.337968	20.72
52	.253615	22.12	.261473	22.53	52	.329829	20.25	.339211	20.70
53	.254942	22.10	.262825	22.48	53	.331044	20.22	.340453	20.65
54	.256268	22.05	.264174	22.47	54	.332257	20.18	.341692	20.63
55	8.257591	22.02	8.265522	22.42	55	8.333468	20.17	8.342930	20.60
56	.258912	21.98	.266867	22.40	56	.334678	20.13	.344166	20.58
57	.260231	21.95	.268211	22.35	57	.335886	20.10	.345401	20.55
58	.261548	21.92	.269552	22.33	58	.337092	20.07	.346634	20.52
59	.262863	21.88	.270892	22.28	59	.338296	20.05	.347865	20.50
60	8.264176		8.272229		60	8.339499		8.349095	

Table 57. — *Continued*

LOGARITHMIC VERSED SINES AND EXTERNAL SECANTS

12°					13°				
M.	Vers.	D. 1″.	Exsec.	D. 1″.	M.	Vers.	D. 1″.	Exsec.	D. 1″.
0	8.339499	20.02	8.349005	20.47	0	8.408748	18.47	8.420024	18.95
1	.340700	20.00	.350323	20.43	1	.409856	18.43	.421161	18.93
2	.341900	19.95	.351549	20.42	2	.410962	18.42	.422297	18.90
3	.343097	19.95	.352774	20.38	3	.412067	18.40	.423431	18.88
4	.344294	19.90	.353997	20.35	4	.413171	18.38	.424564	18.87
5	8.345488	19.88	8.355218	20.33	5	8.414274	18.35	8.425696	18.83
6	.346681	19.85	.356438	20.30	6	.415375	18.32	.426826	18.82
7	.347872	19.82	.357656	20.28	7	.416474	18.30	.427955	18.80
8	.349061	19.80	.358873	20.25	8	.417572	18.28	.429083	18.77
9	.350249	19.77	.360088	20.22	9	.418669	18.25	.430209	18.75
10	8.351435	19.75	8.361301	20.20	10	8.419764	18.23	8.431334	18.73
11	.352620	19.72	.362513	20.18	11	.420858	18.22	.432458	18.70
12	.353803	19.68	.363724	20.13	12	.421951	18.18	.433580	18.67
13	.354984	19.67	.364932	20.12	13	.423042	18.17	.434700	18.67
14	.356164	19.63	.366139	20.10	14	.424132	18.13	.435820	18.63
15	8.357342	19.60	8.367345	20.07	15	8.425220	18.12	8.436938	18.62
16	.358518	19.58	.368549	20.03	16	.426307	18.10	.438055	18.58
17	.359693	19.55	.369751	20.02	17	.427393	18.07	.439170	18.57
18	.360866	19.53	.370952	19.98	18	.428477	18.05	.440284	18.55
19	.362038	19.50	.372151	19.95	19	.429560	18.02	.441397	18.53
20	8.363208	19.48	8.373348	19.95	20	8.430641	18.02	8.442509	18.50
21	.364377	19.43	.374545	19.90	21	.431722	17.97	.443619	18.47
22	.365543	19.43	.375739	19.88	22	.432800	17.97	.444727	18.47
23	.366709	19.38	.376932	19.85	23	.433878	17.93	.445835	18.43
24	.367872	19.37	.378123	19.83	24	.434954	17.92	.446941	18.42
25	8.369034	19.35	8.379313	19.82	25	8.436029	17.88	8.448046	18.38
26	.370195	19.32	.380502	19.78	26	.437102	17.87	.449149	18.38
27	.371354	19.28	.381689	19.75	27	.438174	17.85	.450252	18.35
28	.372511	19.27	.382874	19.73	28	.439245	17.82	.451353	18.32
29	.373667	19.25	.384058	19.70	29	.440314	17.80	.452452	18.32
30	8.374822	19.20	8.385240	19.68	30	8.441382	17.78	8.453551	18.28
31	.375974	19.18	.386421	19.65	31	.442449	17.75	.454648	18.25
32	.377125	19.17	.387600	19.63	32	.443514	17.73	.455743	18.25
33	.378275	19.13	.388778	19.60	33	.444578	17.72	.456838	18.22
34	.379423	19.12	.389954	19.58	34	.445641	17.68	.457931	18.20
35	8.380570	19.08	8.391129	19.55	35	8.446702	17.68	8.459023	18.18
36	.381715	19.05	.392302	19.53	36	.447763	17.63	.460114	18.15
37	.382858	19.03	.393474	19.50	37	.448821	17.63	.461203	18.13
38	.384000	19.02	.394644	19.48	38	.449879	17.60	.462291	18.12
39	.385141	18.98	.395813	19.45	39	.450935	17.58	.463378	18.10
40	8.386280	18.95	8.396980	19.43	40	8.451990	17.55	8.464464	18.07
41	.387417	18.93	.398146	19.42	41	.453043	17.55	.465548	18.05
42	.388553	18.92	.399311	19.38	42	.454096	17.52	.466631	18.03
43	.389688	18.88	.400474	19.35	43	.455147	17.48	.467713	18.00
44	.390821	18.85	.401635	19.33	44	.456196	17.48	.468793	18.00
45	8.391952	18.83	8.402795	19.32	45	8.457245	17.45	8.469873	17.97
46	.393082	18.82	.403954	19.28	46	.458292	17.43	.470951	17.95
47	.394211	18.78	.405111	19.27	47	.459338	17.40	.472028	17.92
48	.395338	18.75	.406267	19.23	48	.460382	17.40	.473103	17.90
49	.396463	18.73	.407421	19.22	49	.461426	17.37	.474177	17.90
50	8.397587	18.72	8.408574	19.18	50	8.462468	17.35	8.475251	17.85
51	.398710	18.68	.409725	19.17	51	.463509	17.32	.476322	17.85
52	.399831	18.67	.410875	19.13	52	.464548	17.30	.477393	17.83
53	.400951	18.63	.412023	19.13	53	.465586	17.28	.478463	17.80
54	.402069	18.62	.413171	19.08	54	.466623	17.27	.479531	17.78
55	8.403186	18.58	8.414316	19.08	55	8.467659	17.23	8.480598	17.77
56	.404301	18.57	.415461	19.03	56	.468693	17.23	.481664	17.73
57	.405415	18.53	.416603	19.03	57	.469727	17.20	.482728	17.73
58	.406527	18.52	.417745	19.00	58	.470759	17.17	.483792	17.70
59	.407638	18.50	.418885	18.98	59	.471789	17.17	.484854	17.68
60	8.408748		8.420024		60	8.472819		8.485915	

TABLE 57. — *Continued*

LOGARITHMIC VERSED SINES AND EXTERNAL SECANTS

14°					15°				
M.	Vers.	D. 1″.	Exsec.	D. 1″.	M.	Vers.	D. 1″.	Exsec.	D. 1″.
0	8.472819	17.13	8.485915	17.67	0	8.532425	15.98	8.547482	16.53
1	.473847	17.12	.486975	17.63	1	.533384	15.97	.548474	16.53
2	.474874	17.10	.488033	17.63	2	.534342	15.95	.549466	16.52
3	.475900	17.08	.489091	17.60	3	.535299	15.93	.550457	16.50
4	.476925	17.05	.490147	17.58	4	.536255	15.92	.551447	16.48
5	8.477948	17.03	8.491202	17.57	5	8.537210	15.88	8.552436	16.47
6	.478970	17.02	.492256	17.53	6	.538163	15.88	.553424	16.43
7	.479991	17.00	.493308	17.53	7	.539116	15.87	.554410	16.43
8	.481011	16.97	.494360	17.50	8	.540068	15.83	.555396	16.42
9	.482029	16.95	.495410	17.48	9	.541018	15.83	.556381	16.38
10	8.483046	16.93	8.496459	17.47	10	8.541968	15.80	8.557364	16.38
11	.484062	16.92	.497507	17.45	11	.542916	15.78	.558347	16.37
12	.485077	16.90	.498554	17.43	12	.543863	15.78	.559329	16.33
13	.486091	16.87	.499600	17.40	13	.544810	15.75	.560309	16.33
14	.487103	16.87	.500644	17.38	14	.545755	15.73	.561289	16.30
15	8.488115	16.83	8.501687	17.38	15	8.546699	15.72	8.562267	16.30
16	.489125	16.82	.502730	17.35	16	.547642	15.70	.563245	16.28
17	.490134	16.78	.503771	17.32	17	.548584	15.68	.564222	16.25
18	.491141	16.78	.504810	17.32	18	.549525	15.67	.565197	16.25
19	.492148	16.75	.505849	17.30	19	.550465	15.65	.566172	16.22
20	8.493153	16.73	8.506887	17.27	20	8.551404	15.63	8.567145	16.22
21	.494157	16.72	.507923	17.25	21	.552342	15.62	.568118	16.20
22	.495160	16.70	.508958	17.25	22	.553279	15.60	.569090	16.17
23	.496162	16.[illegible]	.509993	17.22	23	.554215	15.58	.570060	16.17
24	.497162	16.67	.511026	17.18	24	.555150	15.57	.571030	16.15
25	8.498162	16.63	8.512057	17.18	25	8.556084	15.55	8.571999	16.12
26	.499160	16.62	.513088	17.17	26	.557017	15.53	.572966	16.12
27	.500157	16.60	.514118	17.13	27	.557949	15.50	.573933	16.10
28	.501153	16.58	.515146	17.13	28	.558879	15.50	.574899	16.08
29	.502148	16.57	.516174	17.10	29	.559809	15.48	.575864	16.05
30	8.503142	16.53	8.517200	17.08	30	8.560738	15.47	8.576827	16.05
31	.504134	16.52	.518225	17.07	31	.561666	15.43	.577790	16.03
32	.505125	16.52	.519249	17.05	32	.562592	15.43	.578752	16.02
33	.506116	16.48	.520272	17.03	33	.563518	15.42	.579713	16.00
34	.507105	16.45	.521294	17.02	34	.564443	15.40	.580673	15.98
35	8.508092	16.45	8.522315	16.98	35	8.565367	15.37	8.581632	15.97
36	.509079	16.43	.523334	16.98	36	.566289	15.37	.582590	15.95
37	.510065	16.40	.524353	16.95	37	.567211	15.35	.583547	15.93
38	.511049	16.40	.525370	16.95	38	.568132	15.33	.584503	15.92
39	.512033	16.37	.526387	16.92	39	.569052	15.30	.585458	15.90
40	8.513015	16.35	8.527402	16.90	40	8.569970	15.30	8.586412	15.88
41	.513996	16.33	.528416	16.88	41	.570888	15.28	.587365	15.88
42	.514976	16.32	.529429	16.87	42	.571805	15.27	.588318	15.85
43	.515955	16.28	.530441	16.85	43	.572721	15.25	.589269	15.83
44	.516932	16.28	.531452	16.83	44	.573636	15.22	.590219	15.83
45	8.517909	16.25	8.532462	16.82	45	8.574549	15.22	8.591169	15.80
46	.518884	16.25	.533471	16.78	46	.575462	15.20	.592117	15.80
47	.519859	16.22	.534478	16.78	47	.576374	15.18	.593065	15.78
48	.520832	16.20	.535485	16.75	48	.577285	15.17	.594012	15.75
49	.521804	16.18	.536490	16.75	49	.578195	15.15	.594957	15.75
50	8.522775	16.17	8.537495	16.72	50	8.579104	15.13	8.595902	15.73
51	.523745	16.15	.538498	16.72	51	.580012	15.12	.596846	15.72
52	.524714	16.13	.539501	16.68	52	.580919	15.10	.597789	15.70
53	.525682	16.10	.540502	16.67	53	.581825	15.08	.598731	15.68
54	.526648	16.10	.541502	16.65	54	.582730	15.07	.599672	15.67
55	8.527614	16.07	8.542501	16.63	55	8.583634	15.05	8.600612	15.65
56	.528578	16.07	.543499	16.63	56	.584537	15.05	.601551	15.65
57	.529542	16.03	.544497	16.60	57	.585440	15.02	.602490	15.62
58	.530504	16.02	.545493	16.58	58	.586341	15.00	.603427	15.60
59	.531465	16.00	.546488	16.57	59	.587241	15.00	.604363	15.60
60	8.532425		8.547482		60	8.588141		8.605298	

TABLE 57.—*Continued*

LOGARITHMIC VERSED SINES AND EXTERNAL SECANTS

16°					17°				
M.	Vers.	D. 1″.	Exsec.	D. 1″.	M.	Vers.	D. 1″.	Exsec.	D. 1″.
0	8.588141	14.97	8.605299	15.58	0	8.640434	14.08	8.659838	14.72
1	.589039	14.95	.606234	15.55	1	.641279	14.07	.660721	14.72
2	.589936	14.95	.607167	15.55	2	.642123	14.05	.661604	14.70
3	.590833	14.93	.608100	15.53	3	.642966	14.05	.662486	14.68
4	.591729	14.90	.609032	15.52	4	.643809	14.02	.663367	14.68
5	8.592623	14.90	8.609963	15.50	5	8.644650	14.02	8.664248	14.65
6	.593517	14.88	.610893	15.50	6	.645491	14.00	.665127	14.65
7	.594410	14.87	.611823	15.47	7	.646331	13.98	.666006	14.63
8	.595302	14.83	.612751	15.45	8	.647170	13.97	.666884	14.62
9	.596192	14.83	.613678	15.45	9	.648008	13.95	.667761	14.60
10	8.597082	14.82	8.614605	15.43	10	8.648845	13.95	8.668637	14.60
11	.597971	14.82	.615531	15.42	11	.649682	13.93	.669513	14.58
12	.598860	14.78	.616456	15.38	12	.650518	13.92	.670388	14.57
13	.599747	14.77	.617379	15.38	13	.651353	13.90	.671262	14.55
14	.600633	14.75	.618302	15.38	14	.652187	13.88	.672135	14.55
15	8.601518	14.75	8.619225	15.35	15	8.653020	13.87	8.673008	14.52
16	.602403	14.72	.620146	15.33	16	.653852	13.87	.673879	14.52
17	.603286	14.72	.621066	15.33	17	.654684	13.85	.674750	14.50
18	.604169	14.70	.621986	15.30	18	.655515	13.83	.675620	14.50
19	.605051	14.67	.622904	15.30	19	.656345	13.82	.676490	14.47
20	8.605931	14.67	8.623822	15.28	20	8.657174	13.82	8.677358	14.47
21	.606811	14.65	.624739	15.27	21	.658003	13.78	.678226	14.45
22	.607690	14.63	.625655	15.25	22	.658830	13.78	.679093	14.45
23	.608568	14.62	.626570	15.23	23	.659657	13.77	.679960	14.42
24	.609445	14.60	.627484	15.23	24	.660483	13.75	.680825	14.42
25	8.610321	14.60	8.628398	15.20	25	8.661308	13.73	8.681690	14.40
26	.611197	14.57	.629310	15.20	26	.662132	13.73	.682554	14.38
27	.612071	14.57	.630222	15.18	27	.662956	13.72	.683417	14.38
28	.612945	14.53	.631133	15.17	28	.663779	13.70	.684280	14.35
29	.613817	14.53	.632043	15.15	29	.664601	13.68	.685141	14.35
30	8.614689	14.52	8.632952	15.13	30	8.665422	13.67	8.686002	14.35
31	.615560	14.50	.633860	15.13	31	.666242	13.67	.686863	14.32
32	.616430	14.48	.634768	15.10	32	.667062	13.65	.687722	14.32
33	.617299	14.47	.635674	15.10	33	.667881	13.63	.688581	14.30
34	.618167	14.45	.636580	15.08	34	.668699	13.62	.689439	14.28
35	8.619034	14.45	8.637485	15.07	35	8.669516	13.60	8.690296	14.28
36	.619901	14.42	.638389	15.05	36	.670332	13.60	.691153	14.25
37	.620766	14.42	.639292	15.05	37	.671148	13.58	.692008	14.25
38	.621631	14.40	.640195	15.02	38	.671963	13.57	.692863	14.25
39	.622495	14.38	.641096	15.02	39	.672777	13.55	.693718	14.22
40	8.623358	14.37	8.641997	15.00	40	8.673590	13.55	8.694571	14.22
41	.624220	14.35	.642897	14.98	41	.674403	13.53	.695424	14.20
42	.625081	14.33	.643796	14.97	42	.675215	13.52	.696276	14.18
43	.625941	14.33	.644694	14.95	43	.676026	13.50	.697127	14.18
44	.626801	14.30	.645591	14.95	44	.676836	13.48	.697978	14.17
45	8.627659	14.30	8.646488	14.93	45	8.677645	13.48	8.698828	14.15
46	.628517	14.28	.647384	14.92	46	.678454	13.47	.699677	14.13
47	.629374	14.27	.648279	14.90	47	.679262	13.45	.700525	14.13
48	.630230	14.25	.649173	14.88	48	.680069	13.43	.701373	14.12
49	.631085	14.23	.650066	14.87	49	.680875	13.43	.702220	14.10
50	8.631939	14.22	8.650958	14.87	50	8.681681	13.42	8.703066	14.10
51	.632792	14.22	.651850	14.85	51	.682486	13.40	.703912	14.07
52	.633645	14.18	.652741	14.83	52	.683290	13.38	.704756	14.07
53	.634496	14.18	.653631	14.82	53	.684093	13.38	.705600	14.07
54	.635347	14.17	.654520	14.80	54	.684896	13.35	.706444	14.03
55	8.636197	14.15	8.655408	14.80	55	8.685697	13.35	8.707286	14.03
56	.637046	14.13	.656296	14.77	56	.686498	13.35	.708128	14.02
57	.637894	14.13	.657182	14.77	57	.687299	13.32	.708969	14.00
58	.638742	14.10	.658068	14.77	58	.688098	13.32	.709810	13.98
59	.639588		.658954		59	.688897		.710650	
60	8.640434		8.659838		60	8.689695		8.711489	

TABLE 57. — *Continued*

LOGARITHMIC VERSED SINES AND EXTERNAL SECANTS

18°					19°				
M.	Vers.	D. 1″.	Exsec.	D. 1″.	M.	Vers.	D. 1″.	Exsec.	D. 1″.
0	8.689695	13.28	8.711489	13.97	0	8.736248	12.58	8.760578	13.30
1	.690492	13.28	.712327	13.95	1	.737003	12.57	.761376	13.30
2	.691289	13.25	.713164	13.95	2	.737757	12.55	.762174	13.28
3	.692084	13.25	.714001	13.95	3	.738510	12.55	.762971	13.27
4	.692879	13.25	.714838	13.92	4	.739263	12.53	.763767	13.27
5	8.693674	13.22	8.715673	13.92	5	8.740015	12.52	8.764563	13.25
6	.694467	13.22	.716508	13.90	6	.740766	12.50	.765358	13.23
7	.695260	13.20	.717342	13.88	7	.741516	12.50	.766152	13.23
8	.696052	13.18	.718175	13.88	8	.742266	12.50	.766946	13.22
9	.696843	13.18	.719008	13.87	9	.743016	12.47	.767739	13.20
10	8.697634	13.17	8.719840	13.85	10	8.743764	12.47	8.768531	13.20
11	.698424	13.15	.720671	13.85	11	.744512	12.45	.769323	13.18
12	.699213	13.13	.721502	13.83	12	.745259	12.45	.770114	13.18
13	.700001	13.13	.722332	13.82	13	.746006	12.43	.770905	13.17
14	.700789	13.12	.723161	13.80	14	.746752	12.42	.771695	13.15
15	8.701576	13.10	8.723989	13.80	15	8.747497	12.42	8.772484	13.15
16	.702362	13.08	.724817	13.78	16	.748242	12.40	.773273	13.13
17	.703147	13.08	.725644	13.78	17	.748986	12.38	.774061	13.13
18	.703932	13.07	.726471	13.77	18	.749729	12.38	.774849	13.10
19	.704716	13.05	.727297	13.75	19	.750472	12.37	.775635	13.12
20	8.705499	13.05	8.728122	13.73	20	8.751214	12.35	8.776422	13.08
21	.706282	13.02	.728946	13.73	21	.751955	12.35	.777207	13.10
22	.707063	13.02	.729770	13.72	22	.752696	12.33	.777993	13.07
23	.707844	13.02	.730593	13.70	23	.753436	12.32	.778777	13.07
24	.708625	12.98	.731415	13.70	24	.754175	12.32	.779561	13.05
25	8.709404	12.98	8.732237	13.68	25	8.754914	12.30	8.780344	13.05
26	.710183	12.97	.733058	13.67	26	.755652	12.28	.781127	13.03
27	.710961	12.97	.733878	13.67	27	.756389	12.28	.781909	13.02
28	.711739	12.95	.734698	13.65	28	.757126	12.27	.782690	13.02
29	.712516	12.93	.735517	13.63	29	.757862	12.27	.783471	13.00
30	8.713292	12.92	8.736335	13.63	30	8.758598	12.25	8.784251	13.00
31	.714067	12.92	.737153	13.62	31	.759333	12.23	.785031	12.98
32	.714842	12.90	.737970	13.60	32	.760067	12.23	.785810	12.97
33	.715616	12.88	.738786	13.60	33	.760801	12.22	.786588	12.97
34	.716389	12.87	.739602	13.58	34	.761534	12.20	.787366	12.97
35	8.717161	12.87	8.740417	13.57	35	8.762266	12.20	8.788144	12.93
36	.717933	12.85	.741231	13.57	36	.762998	12.18	.788920	12.93
37	.718704	12.85	.742045	13.55	37	.763729	12.17	.789696	12.93
38	.719475	12.82	.742858	13.53	38	.764459	12.17	.790472	12.92
39	.720244	12.82	.743670	13.53	39	.765189	12.15	.791247	12.90
40	8.721013	12.82	8.744482	13.52	40	8.765918	12.15	8.792021	12.90
41	.721782	12.78	.745293	13.50	41	.766647	12.12	.792795	12.88
42	.722549	12.78	.746103	13.50	42	.767374	12.13	.793568	12.87
43	.723316	12.78	.746913	13.48	43	.768102	12.10	.794340	12.87
44	.724083	12.75	.747722	13.47	44	.768828	12.10	.795112	12.87
45	8.724848	12.75	8.748530	13.47	45	8.769554	12.10	8.795884	12.83
46	.725613	12.73	.749338	13.45	46	.770280	12.08	.796654	12.85
47	.726377	12.72	.750145	13.43	47	.771005	12.07	.797425	12.82
48	.727140	12.72	.750951	13.43	48	.771729	12.05	.798194	12.82
49	.727903	12.70	.751757	13.42	49	.772452	12.05	.798963	12.82
50	8.728665	12.70	8.752562	13.42	50	8.773175	12.05	8.799732	12.80
51	.729427	12.67	.753367	13.40	51	.773898	12.02	.800500	12.78
52	.730187	12.67	.754171	13.38	52	.774619	12.02	.801267	12.78
53	.730947	12.67	.754974	13.37	53	.775340	12.02	.802034	12.77
54	.731707	12.63	.755776	13.37	54	.776061	12.00	.802800	12.75
55	8.732465	12.63	8.756578	13.37	55	8.776781	11.98	8.803565	12.75
56	.733223	12.63	.757380	13.33	56	.777500	11.97	.804330	12.75
57	.733981	12.60	.758180	13.33	57	.778218	11.97	.805095	12.73
58	.734737	12.60	.758980	13.33	58	.778936	11.97	.805859	12.72
59	.735493	12.58	.759780	13.30	59	.779654	11.93	.806622	12.72
60	8.736248		8.760578		60	8.780370		8.807385	

Table 57. — *Continued*

LOGARITHMIC VERSED SINES AND EXTERNAL SECANTS

	20°					21°			
M.	Vers.	D. 1″.	Exsec.	D. 1″.	M.	Vers.	D. 1″.	Exsec.	D. 1″.
0	8.780370	11.95	8.807385	12.70	0	8.822296	11.35	8.852144	12.17
1	.781087	11.92	.808147	12.68	1	.822977	11.35	.852874	12.17
2	.781802	11.92	.808908	12.68	2	.823658	11.33	.853604	12.13
3	.782517	11.90	.809669	12.68	3	.824338	11.33	.854332	12.15
4	.783231	11.90	.810430	12.67	4	.825018	11.32	.855061	12.13
5	8.783945	11.88	8.811190	12.65	5	8.825697	11.32	8.855789	12.12
6	.784658	11.88	.811949	12.65	6	.826376	11.30	.856516	12.12
7	.785371	11.87	.812708	12.63	7	.827054	11.28	.857243	12.10
8	.786083	11.85	.813466	12.63	8	.827731	11.28	.857969	12.10
9	.786794	11.85	.814224	12.62	9	.828408	11.28	.858695	12.08
10	8.787505	11.83	8.814981	12.60	10	8.829085	11.27	8.859420	12.08
11	.788215	11.82	.815737	12.60	11	.829761	11.25	.860145	12.07
12	.788924	11.82	.816493	12.60	12	.830436	11.25	.860869	12.07
13	.789633	11.82	.817249	12.58	13	.831111	11.23	.861593	12.05
14	.790342	11.78	.818004	12.57	14	.831785	11.23	.862316	12.05
15	8.791049	11.78	8.818758	12.57	15	8.832459	11.22	8.863039	12.03
16	.791756	11.78	.819512	12.55	16	.833132	11.20	.863761	12.03
17	.792463	11.77	.820265	12.55	17	.833804	11.20	.864483	12.02
18	.793169	11.75	.821018	12.53	18	.834476	11.20	.865204	12.02
19	.793874	11.75	.821770	12.52	19	.835148	11.18	.865925	12.02
20	8.794579	11.73	8.822521	12.52	20	8.835819	11.17	8.866646	11.98
21	.795283	11.73	.823272	12.52	21	.836489	11.17	.867365	12.00
22	.795987	11.72	.824023	12.50	22	.837159	11.17	.868085	11.98
23	.796690	11.70	.824773	12.48	23	.837829	11.15	.868804	11.97
24	.797392	11.70	.825522	12.48	24	.838498	11.13	.869522	11.97
25	8.798094	11.68	8.826271	12.47	25	8.839166	11.13	8.870240	11.95
26	.798795	11.68	.827019	12.47	26	.839834	11.12	.870957	11.95
27	.799496	11.67	.827767	12.45	27	.840501	11.12	.871674	11.93
28	.800196	11.67	.828514	12.45	28	.841168	11.10	.872390	11.93
29	.800896	11.63	.829261	12.43	29	.841834	11.10	.873106	11.93
30	8.801594	11.65	8.830007	12.42	30	8.842500	11.08	8.873822	11.92
31	.802293	11.63	.830752	12.42	31	.843165	11.07	.874537	11.90
32	.802991	11.62	.831497	12.42	32	.843829	11.07	.875251	11.90
33	.803688	11.60	.832242	12.40	33	.844493	11.07	.875965	11.88
34	.804384	11.60	.832986	12.38	34	.845157	11.05	.876678	11.88
35	8.805080	11.60	8.833729	12.38	35	8.845820	11.05	8.877391	11.88
36	.805776	11.58	.834472	12.38	36	.846483	11.03	.878104	11.87
37	.806471	11.57	.835215	12.37	37	.847145	11.02	.878816	11.87
38	.807165	11.57	.835957	12.35	38	.847806	11.02	.879528	11.85
39	.807859	11.55	.836698	12.35	39	.848467	11.00	.880239	11.83
40	8.808552	11.53	8.837439	12.33	40	8.849127	11.00	8.880949	11.83
41	.809244	11.53	.838179	12.33	41	.849787	11.00	.881659	11.83
42	.809936	11.53	.838919	12.32	42	.850447	10.98	.882369	11.82
43	.810628	11.52	.839658	12.30	43	.851106	10.97	.883078	11.82
44	.811319	11.50	.840396	12.32	44	.851764	10.97	.883787	11.80
45	8.812009	11.50	8.841135	12.28	45	8.852422	10.95	8.884495	11.80
46	.812699	11.48	.841872	12.28	46	.853079	10.95	.885203	11.78
47	.813388	11.48	.842609	12.28	47	.853736	10.93	.885910	11.78
48	.814077	11.47	.843346	12.27	48	.854392	10.93	.886617	11.77
49	.814765	11.45	.844082	12.25	49	.855048	10.92	.887323	11.77
50	8.815452	11.45	8.844817	12.25	50	8.855703	10.92	8.888029	11.75
51	.816139	11.43	.845552	12.25	51	.856358	10.90	.888734	11.75
52	.816825	11.43	.846287	12.23	52	.857012	10.90	.889439	11.75
53	.817511	11.42	.847021	12.22	53	.857666	10.88	.890144	11.73
54	.818196	11.42	.847754	12.22	54	.858319	10.88	.890848	11.72
55	8.818881	11.40	8.848487	12.22	55	8.858972	10.87	8.891551	11.72
56	.819565	11.40	.849220	12.20	56	.859624	10.87	.892254	11.72
57	.820249	11.38	.849952	12.18	57	.860276	10.85	.892957	11.70
58	.820932	11.37	.850683	12.18	58	.860927	10.85	.893659	11.70
59	.821614	11.37	.851414	12.17	59	.861578	10.83	.894361	11.68
60	8.822296		8.852144		60	8.862228		8.895062	

TABLE 57.—*Continued*

LOGARITHMIC VERSED SINES AND EXTERNAL SECANTS

22°					23°				
M.	Vers.	D. 1″.	Exsec.	D. 1″.	M.	Vers.	D. 1″.	Exsec.	D. 1″.
0	8.862228	10.82	8.895062	11.68	0	8.900341	10.33	8.936315	11.23
1	.862877	10.83	.895763	11.67	1	.900961	10.35	.936989	11.23
2	.863527	10.80	.896463	11.67	2	.901582	10.32	.937663	11.22
3	.864175	10.80	.897163	11.65	3	.902201	10.33	.938336	11.22
4	.864823	10.80	.897862	11.65	4	.902821	10.32	.939009	11.22
5	8.865471	10.78	8.898561	11.63	5	8.903440	10.30	8.939682	11.20
6	.866118	10.78	.899259	11.63	6	.904058	10.30	.940354	11.20
7	.866765	10.77	.899957	11.63	7	.904676	10.28	.941026	11.20
8	.867411	10.77	.900655	11.62	8	.905293	10.28	.941698	11.18
9	.868057	10.75	.901352	11.60	9	.905910	10.28	.942369	11.17
10	8.868702	10.73	8.902048	11.62	10	8.906527	10.27	8.943039	11.18
11	.869346	10.75	.902745	11.58	11	.907143	10.27	.943710	11.15
12	.869991	10.72	.903440	11.60	12	.907759	10.25	.944379	11.17
13	.870634	10.72	.904136	11.57	13	.908374	10.25	.945049	11.15
14	.871277	10.72	.904830	11.58	14	.908989	10.23	.945718	11.13
15	8.871920	10.70	8.905525	11.57	15	8.909603	10.23	8.946386	11.13
16	.872562	10.70	.906219	11.55	16	.910217	10.22	.947054	11.13
17	.873204	10.68	.906912	11.55	17	.910830	10.22	.947722	11.12
18	.873845	10.68	.907605	11.55	18	.911443	10.22	.948389	11.12
19	.874486	10.67	.908298	11.53	19	.912056	10.20	.949056	11.12
20	8.875126	10.67	8.908990	11.52	20	8.912668	10.18	8.949723	11.10
21	.875766	10.65	.909681	11.52	21	.913279	10.20	.950389	11.10
22	.876405	10.65	.910372	11.52	22	.913891	10.17	.951055	11.08
23	.877044	10.63	.911063	11.52	23	.914501	10.17	.951720	11.08
24	.877682	10.63	.911754	11.48	24	.915111	10.17	.952385	11.07
25	8.878320	10.62	8.912443	11.50	25	8.915721	10.17	8.953049	11.07
26	.878957	10.62	.913133	11.48	26	.916331	10.15	.953713	11.07
27	.879594	10.60	.913822	11.47	27	.916940	10.13	.954377	11.05
28	.880230	10.60	.914510	11.47	28	.917548	10.13	.955040	11.05
29	.880866	10.58	.915198	11.47	29	.918156	10.13	.955703	11.05
30	8.881501	10.58	8.915886	11.45	30	8.918764	10.12	8.956366	11.03
31	.882136	10.58	.916573	11.45	31	.919371	10.10	.957028	11.03
32	.882771	10.57	.917260	11.43	32	.919977	10.12	.957690	11.02
33	.883405	10.55	.917946	11.43	33	.920584	10.10	.958351	11.02
34	.884038	10.55	.918632	11.43	34	.921190	10.08	.959012	11.00
35	8.884671	10.53	8.919318	11.42	35	8.921795	10.08	8.959672	11.00
36	.885303	10.53	.920003	11.40	36	.922400	10.07	.960332	11.00
37	.885935	10.53	.920687	11.42	37	.923004	10.07	.960992	10.98
38	.886567	10.52	.921372	11.38	38	.923608	10.07	.961651	10.98
39	.887198	10.52	.922055	11.40	39	.924212	10.05	.962310	10.98
40	8.887829	10.50	8.922739	11.37	40	8.924815	10.05	8.962969	10.97
41	.888459	10.48	.923421	11.38	41	.925418	10.03	.963627	10.97
42	.889088	10.48	.924104	11.37	42	.926020	10.03	.964285	10.95
43	.889717	10.48	.924786	11.35	43	.926622	10.03	.964942	10.95
44	.890346	10.47	.925467	11.37	44	.927224	10.02	.965599	10.95
45	8.890974	10.47	8.926149	11.33	45	8.927825	10.00	8.966256	10.93
46	.891602	10.45	.926829	11.35	46	.928425	10.00	.966912	10.93
47	.892229	10.45	.927510	11.32	47	.929025	10.00	.967568	10.92
48	.892856	10.43	.928189	11.33	48	.929625	9.98	.968223	10.92
49	.893482	10.43	.928869	11.32	49	.930224	9.98	.968878	10.92
50	8.894108	10.42	8.929548	11.30	50	8.930823	9.97	8.969533	10.90
51	.894733	10.42	.930226	11.32	51	.931421	9.97	.970187	10.90
52	.895358	10.42	.930905	11.28	52	.932019	9.97	.970841	10.88
53	.895983	10.40	.931582	11.30	53	.932617	9.95	.971494	10.88
54	.896607	10.38	.932260	11.27	54	.933214	9.95	.972147	10.88
55	8.897230	10.38	8.932936	11.28	55	8.933811	9.93	8.972800	10.87
56	.897853	10.38	.933613	11.27	56	.934407	9.93	.973452	10.87
57	.898476	10.37	.934289	11.27	57	.935003	9.92	.974104	10.87
58	.899098	10.35	.934965	11.25	58	.935598	9.92	.974756	10.85
59	.899719	10.37	.935640	11.25	59	.936193	9.92	.975407	10.85
60	8.900341		8.936315		60	8.936788		8.976058	

TABLE 57. — *Continued*

LOGARITHMIC VERSED SINES AND EXTERNAL SECANTS

24°					25°				
M.	Vers.	D. 1″.	Exsec.	D. 1″.	M.	Vers.	D. 1″.	Exsec.	D. 1″.
0	8.936788	9.90	8.976058	10.83	0	8.971703	9.50	9.014428	10.47
1	.937382	9.90	.976708	10.83	1	.972273	9.48	.015056	10.48
2	.937976	9.88	.977358	10.83	2	.972842	9.48	.015685	10.45
3	.938569	9.88	.978008	10.82	3	.973411	9.48	.016312	10.47
4	.939162	9.87	.978657	10.82	4	.973980	9.47	.016940	10.45
5	8.939754	9.87	8.979306	10.80	5	8.974548	9.47	9.017567	10.45
6	.940346	9.87	.979954	10.80	6	.975116	9.45	.018194	10.45
7	.940938	9.85	.980602	10.80	7	.975683	9.45	.018821	10.43
8	.941529	9.85	.981250	10.80	8	.976250	9.43	.019447	10.43
9	.942120	9.83	.981898	10.78	9	.976816	9.43	.020073	10.42
10	8.942710	9.83	8.982545	10.77	10	8.977382	9.43	9.020698	10.42
11	.943300	9.82	.983191	10.77	11	.977948	9.43	.021323	10.42
12	.943889	9.83	.983837	10.77	12	.978514	9.40	.021948	10.40
13	.944479	9.80	.984483	10.77	13	.979078	9.42	.022572	10.42
14	.945067	9.80	.985129	10.75	14	.979643	9.40	.023197	10.38
15	8.945655	9.80	8.985774	10.75	15	8.980207	9.40	9.023820	10.40
16	.946243	9.80	.986419	10.73	16	.980771	9.40	.024444	10.38
17	.946831	9.78	.987063	10.73	17	.981335	9.38	.025067	10.38
18	.947418	9.77	.987707	10.73	18	.981898	9.37	.025690	10.37
19	.948004	9.77	.988351	10.72	19	.982460	9.38	.026312	10.37
20	8.948590	9.77	8.988994	10.72	20	8.983023	9.37	9.026934	10.37
21	.949176	9.75	.989637	10.70	21	.983585	9.35	.027556	10.35
22	.949761	9.75	.990279	10.72	22	.984146	9.35	.028177	10.35
23	.950346	9.75	.990922	10.68	23	.984707	9.35	.028798	10.35
24	.950931	9.73	.991563	10.70	24	.985268	9.33	.029419	10.33
25	8.951515	9.73	8.992205	10.68	25	8.985828	9.33	9.030039	10.33
26	.952099	9.72	.992846	10.68	26	.986388	9.33	.030659	10.33
27	.952682	9.72	.993487	10.67	27	.986948	9.32	.031279	10.33
28	.953265	9.70	.994127	10.67	28	.987507	9.32	.031899	10.32
29	.953847	9.70	.994767	10.65	29	.988066	9.32	.032518	10.30
30	8.954429	9.70	8.995406	10.67	30	8.988625	9.30	9.033136	10.32
31	.955011	9.68	.996046	10.65	31	.989183	9.28	.033755	10.30
32	.955592	9.68	.996685	10.63	32	.989740	9.30	.034373	10.30
33	.956173	9.67	.997323	10.63	33	.990298	9.28	.034991	10.28
34	.956753	9.68	.997961	10.63	34	.990855	9.27	.035608	10.28
35	8.957334	9.65	8.998599	10.62	35	8.991411	9.28	9.036225	10.28
36	.957913	9.65	.999236	10.62	36	.991968	9.25	.036842	10.27
37	.958492	9.65	.999873	10.62	37	.992523	9.27	.037458	10.27
38	.959071	9.65	9.000510	10.62	38	.993079	9.25	.038074	10.27
39	.959650	9.62	.001147	10.60	39	.993634	9.25	.038690	10.25
40	8.960227	9.63	9.001783	10.58	40	8.994189	9.23	9.039305	10.25
41	.960805	9.62	.002418	10.58	41	.994743	9.23	.039920	10.25
42	.961382	9.62	.003053	10.58	42	.995297	9.23	.040535	10.25
43	.961959	9.60	.003688	10.58	43	.995851	9.22	.041150	10.23
44	.962535	9.60	.004323	10.57	44	.996404	9.22	.041764	10.23
45	8.963111	9.60	9.004957	10.57	45	8.996957	9.20	9.042378	10.22
46	.963687	9.58	.005591	10.55	46	.997509	9.22	.042991	10.22
47	.964262	9.58	.006224	10.57	47	.998062	9.18	.043604	10.22
48	.964837	9.57	.006858	10.53	48	.998613	9.20	.044217	10.22
49	.965411	9.57	.007490	10.55	49	.999165	9.18	.044830	10.20
50	8.965985	9.57	9.008123	10.53	50	8.999716	9.17	9.045442	10.20
51	.966559	9.55	.008755	10.53	51	9.000266	9.18	.046054	10.18
52	.967132	9.55	.009387	10.52	52	.000817	9.17	.046665	10.18
53	.967705	9.53	.010018	10.52	53	.001367	9.15	.047276	10.18
54	.968277	9.53	.010649	10.52	54	.001916	9.17	.047887	10.18
55	8.968849	9.53	9.011280	10.50	55	9.002466	9.13	9.048498	10.17
56	.969421	9.52	.011910	10.50	56	.003014	9.15	.049108	10.17
57	.969992	9.52	.012540	10.50	57	.003563	9.13	.049718	10.17
58	.970563	9.50	.013170	10.48	58	.004111	9.13	.050328	10.1
59	.971133	9.50	.013799	10.48	59	.004659	9.12	.050937	10.
60	8.971703		9.014428		60	9.005206		9.051546	

TABLE 57. — *Continued*

LOGARITHMIC VERSED SINES AND EXTERNAL SECANTS

26°					27°				
M.	Vers.	D. 1″.	Exsec.	D. 1″.	M.	Vers.	D. 1″.	Exsec.	D. 1″.
0	9.005206	9.12	9.051546	10.15	0	9.037401	8.77	9.087520	9.83
1	.005753	9.12	.052155	10.13	1	.037927	8.75	.088110	9.83
2	.006300	9.10	.052763	10.13	2	.038452	8.77	.088700	9.83
3	.006846	9.10	.053371	10.13	3	.038978	8.75	.089290	9.83
4	.007392	9.10	.053979	10.12	4	.039503	8.73	.089880	9.82
5	9.007938	9.08	9.054586	10.12	5	9.040027	8.75	9.090469	9.82
6	.008483	9.08	.055193	10.12	6	.040552	8.73	.091058	9.82
7	.009028	9.07	.055800	10.10	7	.041076	8.72	.091647	9.80
8	.009572	9.07	.056406	10.10	8	.041599	8.73	.092235	9.80
9	.010116	9.07	.057012	10.10	9	.042123	8.72	.092823	9.80
10	9.010660	9.05	9.057618	10.10	10	9.042646	8.70	9.093411	9.78
11	.011203	9.05	.058224	10.08	11	.043168	8.72	.093998	9.80
12	.011746	9.05	.058829	10.08	12	.043691	8.70	.094586	9.78
13	.012289	9.03	.059434	10.07	13	.044213	8.70	.095173	9.77
14	.012831	9.03	.060038	10.08	14	.044735	8.68	.095759	9.78
15	9.013373	9.03	9.060643	10.07	15	9.045256	8.68	9.096346	9.77
16	.013915	9.02	.061247	10.05	16	.045777	8.68	.096932	9.77
17	.014456	9.02	.061850	10.07	17	.046298	8.67	.097518	9.75
18	.014997	9.02	.062454	10.05	18	.046818	8.67	.098103	9.77
19	.015538	9.00	.063057	10.03	19	.047338	8.67	.098689	9.75
20	9.016078	9.00	9.063659	10.05	20	9.047858	8.65	9.099274	9.73
21	.016618	8.98	.064262	10.03	21	.048377	8.65	.099858	9.75
22	.017157	9.00	.064864	10.03	22	.048896	8.65	.100443	9.73
23	.017697	8.97	.065466	10.02	23	.049415	8.63	.101027	9.73
24	.018235	8.98	.066067	10.02	24	.049933	8.63	.101611	9.72
25	9.018774	8.97	9.066668	10.02	25	9.050451	8.63	9.102194	9.73
26	.019312	8.97	.067269	10.02	26	.050969	8.63	.102778	9.72
27	.019850	8.95	.067870	10.00	27	.051487	8.62	.103361	9.70
28	.020387	8.95	.068470	10.00	28	.052004	8.60	.103943	9.72
29	.020924	8.95	.069070	10.00	29	.052520	8.62	.104526	9.70
30	9.021461	8.93	9.069670	9.98	30	9.053037	8.60	9.105108	9.70
31	.021997	8.93	.070269	9.98	31	.053553	8.60	.105690	9.68
32	.022533	8.93	.070868	9.98	32	.054069	8.58	.106271	9.70
33	.023069	8.92	.071467	9.97	33	.054584	8.58	.106853	9.68
34	.023604	8.92	.072065	9.97	34	.055099	8.58	.107434	9.68
35	9.024139	8.90	9.072663	9.97	35	9.055614	8.58	9.108015	9.67
36	.024673	8.92	.073261	9.97	36	.056129	8.57	.108595	9.67
37	.025208	8.90	.073859	9.95	37	.056643	8.57	.109175	9.67
38	.025742	8.88	.074456	9.95	38	.057157	8.55	.109755	9.67
39	.026275	8.88	.075053	9.93	39	.057670	8.55	.110335	9.65
40	9.026808	8.88	9.075649	9.95	40	9.058183	8.55	9.110914	9.67
41	.027341	8.88	.076246	9.93	41	.058696	8.55	.111494	9.63
42	.027874	8.87	.076842	9.92	42	.059209	8.53	.112072	9.65
43	.028406	8.87	.077437	9.93	43	.059721	8.53	.112651	9.63
44	.028938	8.85	.078033	9.92	44	.060233	8.53	.113229	9.63
45	9.029469	8.85	9.078628	9.92	45	9.060745	8.52	9.113807	9.63
46	.030000	8.85	.079223	9.90	46	.061256	8.52	.114385	9.63
47	.030531	8.85	.079817	9.92	47	.061767	8.50	.114963	9.62
48	.031062	8.83	.080412	9.90	48	.062277	8.52	.115540	9.62
49	.031592	8.83	.081006	9.88	49	.062788	8.50	.116117	9.60
50	9.032122	8.82	9.081599	9.90	50	9.063298	8.48	9.116693	9.62
51	.032651	8.82	.082193	9.88	51	.063807	8.50	.117270	9.60
52	.033180	8.82	.082786	9.87	52	.064317	8.48	.117846	9.60
53	.033709	8.80	.083378	9.88	53	.064826	8.48	.118422	9.58
54	.034237	8.80	.083971	9.87	54	.065335	8.47	.118997	9.60
55	9.034765	8.80	9.084563	9.87	55	9.065843	8.47	9.119573	9.58
56	.035293	8.78	.085155	9.87	56	.066351	8.47	.120148	9.58
57	.035820	8.78	.085747	9.85	57	.066859	8.45	.120723	9.57
58	.036347	8.78	.086338	9.85	58	.067366	8.47	.121297	9.57
59	.036874	8.78	.086929	9.85	59	.067874	8.43	.121871	9.51
60	9.037401		9.087520		60	9.068380		9.122445	

TABLE 57. — *Continued*

LOGARITHMIC VERSED SINES AND EXTERNAL SECANTS

28°					29°				
M.	Vers.	D. 1″.	Exsec.	D. 1″.	M.	Vers.	D. 1″.	Exsec.	D. 1″.
0	9.068380	8.45	9.122445	9.57	0	9.098229	8.15	9.156410	9.30
1	.068887	8.43	.123019	9.57	1	.098718	8.13	.156968	9.32
2	.069393	8.43	.123593	9.55	2	.099206	8.12	.157527	9.28
3	.069899	8.43	.124166	9.55	3	.099693	8.13	.158084	9.30
4	.070405	8.42	.124739	9.53	4	.100181	8.12	.158642	9.30
5	9.070910	8.42	9.125311	9.55	5	9.100668	8.12	9.159200	9.28
6	.071415	8.40	.125884	9.53	6	.101155	8.12	.159757	9.28
7	.071919	8.42	.126456	9.53	7	.101642	8.10	.160314	9.27
8	.072424	8.40	.127028	9.52	8	.102128	8.10	.160870	9.28
9	.072928	8.40	.127599	9.53	9	.102614	8.10	.161427	9.27
10	9.073432	8.38	9.128171	9.52	10	9.103100	8.08	9.161983	9.27
11	.073935	8.38	.128742	9.52	11	.103585	8.08	.162539	9.27
12	.074438	8.38	.129313	9.50	12	.104070	8.08	.163095	9.25
13	.074941	8.37	.129883	9.50	13	.104555	8.08	.163650	9.25
14	.075443	8.38	.130453	9.50	14	.105040	8.07	.164205	9.25
15	9.075946	8.35	9.131023	9.50	15	9.105524	8.07	9.164760	9.25
16	.076447	8.37	.131593	9.50	16	.106008	8.05	.165315	9.25
17	.076949	8.35	.132163	9.48	17	.106491	8.07	.165870	9.23
18	.077450	8.35	.132732	9.48	18	.106975	8.05	.166424	9.23
19	.077951	8.35	.133301	9.48	19	.107458	8.05	.166978	9.23
20	9.078452	8.33	9.133870	9.47	20	9.107941	8.03	9.167532	9.22
21	.078952	8.33	.134438	9.47	21	.108423	8.05	.168085	9.23
22	.079452	8.33	.135006	9.47	22	.108906	8.03	.168639	9.22
23	.079952	8.32	.135574	9.47	23	.109388	8.02	.169192	9.22
24	.080451	8.32	.136142	9.45	24	.109869	8.03	.169745	9.20
25	9.080950	8.32	9.136709	9.47	25	9.110351	8.02	9.170297	9.22
26	.081449	8.32	.137277	9.45	26	.110832	8.02	.170850	9.20
27	.081948	8.30	.137844	9.43	27	.111313	8.00	.171402	9.20
28	.082446	8.30	.138410	9.45	28	.111793	8.00	.171954	9.18
29	.082944	8.28	.138977	9.43	29	.112273	8.00	.172505	9.20
30	9.083441	8.30	9.139543	9.43	30	9.112753	8.00	9.173057	9.18
31	.083939	8.28	.140109	9.42	31	.113233	8.00	.173608	9.18
32	.084436	8.27	.140674	9.43	32	.113713	7.98	.174159	9.18
33	.084932	8.28	.141240	9.42	33	.114192	7.98	.174710	9.17
34	.085429	8.27	.141805	9.42	34	.114671	7.97	.175260	9.17
35	9.085925	8.25	9.142370	9.40	35	9.115149	7.97	9.175810	9.17
36	.086420	8.27	.142934	9.42	36	.115627	7.97	.176360	9.17
37	.086916	8.25	.143499	9.40	37	.116105	7.97	.176910	9.15
38	.087411	8.25	.144063	9.40	38	.116583	7.97	.177460	9.15
39	.087906	8.23	.144627	9.38	39	.117061	7.95	.178009	9.15
40	9.088400	8.25	9.145190	9.40	40	9.117538	7.95	9.178558	9.15
41	.088895	8.23	.145754	9.38	41	.118015	7.93	.179107	9.15
42	.089389	8.22	.146317	9.38	42	.118491	7.95	.179656	9.13
43	.089882	8.23	.146880	9.37	43	.118968	7.93	.180204	9.13
44	.090376	8.22	.147442	9.38	44	.119444	7.92	.180752	9.13
45	9.090869	8.22	9.148005	9.37	45	9.119919	7.93	9.181300	9.13
46	.091362	8.20	.148567	9.37	46	.120395	7.92	.181848	9.12
47	.091854	8.20	.149129	9.35	47	.120870	7.92	.182395	9.13
48	.092346	8.20	.149690	9.35	48	.121345	7.92	.182943	9.12
49	.092838	8.20	.150251	9.37	49	.121820	7.90	.183490	9.10
50	9.093330	8.18	9.150813	9.33	50	9.122294	7.90	9.184036	9.12
51	.093821	8.18	.151373	9.35	51	.122768	7.90	.184583	9.10
52	.094312	8.18	.151934	9.33	52	.123242	7.88	.185129	9.10
53	.094803	8.17	.152494	9.35	53	.123715	7.90	.185675	9.10
54	.095293	8.17	.153055	9.32	54	.124189	7.88	.186221	9.10
55	9.095783	8.17	9.153614	9.33	55	9.124662	7.87	9.186767	9.08
56	.096273	8.17	.154174	9.32	56	.125134	7.88	.187312	9.10
57	.096763	8.15	.154733	9.33	57	.125607	7.87	.187858	9.08
58	.097252	8.15	.155293	9.30	58	.126079	7.87	.188403	9.07
59	.097741	8.13	.155851	9.32	59	.126551	7.85	.188947	9.08
60	9.098229		9.156410		60	9.127022		9.189492	

TABLE 57.—*Continued*

LOGARITHMIC VERSED SINES AND EXTERNAL SECANTS

30°					31°				
M.	Vers.	D. 1″.	Exsec.	D. 1″.	M.	Vers.	D. 1″.	Exsec.	D. 1″.
0	9.127022	7.87	9.189492	9.07	0	9.154828	7.58	9.221762	8.85
1	.127494	7.85	.190036	9.07	1	.155283	7.58	.222293	8.87
2	.127965	7.85	.190580	9.07	2	.155738	7.58	.222825	8.83
3	.128436	7.83	.191124	9.07	3	.156193	7.58	.223355	8.85
4	.128906	7.83	.191668	9.05	4	.156648	7.57	.223886	8.85
5	9.129376	7.83	9.192211	9.05	5	9.157102	7.57	9.224417	8.83
6	.129846	7.83	.192754	9.05	6	.157556	7.57	.224947	8.83
7	.130316	7.82	.193297	9.05	7	.158010	7.57	.225477	8.83
8	.130785	7.83	.193840	9.03	8	.158464	7.55	.226007	8.83
9	.131255	7.82	.194382	9.05	9	.158917	7.55	.226537	8.82
10	9.131724	7.80	9.194925	9.03	10	9.159370	7.55	9.227066	8.82
11	.132192	7.80	.195467	9.03	11	.159823	7.55	.227595	8.83
12	.132660	7.82	.196009	9.02	12	.160276	7.53	.228125	8.80
13	.133129	7.78	.196550	9.03	13	.160728	7.53	.228653	8.82
14	.133596	7.80	.197092	9.02	14	.161180	7.53	.229182	8.82
15	9.134064	7.78	9.197633	9.02	15	9.161632	7.52	9.229711	8.80
16	.134531	7.78	.198174	9.02	16	.162083	7.53	.230239	8.80
17	.134998	7.78	.198715	9.00	17	.162535	7.52	.230767	8.80
18	.135465	7.77	.199255	9.00	18	.162986	7.52	.231295	8.78
19	.135931	7.77	.199795	9.00	19	.163437	7.50	.231822	8.80
20	9.136397	7.77	9.200335	9.00	20	9.163887	7.52	9.232350	8.78
21	.136863	7.77	.200875	9.00	21	.164338	7.50	.232877	8.78
22	.137329	7.75	.201415	8.98	22	.164788	7.48	.233404	8.78
23	.137794	7.77	.201954	9.00	23	.165237	7.50	.233931	8.78
24	.138260	7.73	.202494	8.98	24	.165687	7.48	.234458	8.77
25	9.138724	7.75	9.203033	8.97	25	9.166136	7.48	9.234984	8.77
26	.139189	7.73	.203571	8.98	26	.166585	7.48	.235510	8.77
27	.139653	7.73	.204110	8.97	27	.167034	7.48	.236036	8.77
28	.140117	7.73	.204648	8.97	28	.167483	7.47	.236562	8.77
29	.140581	7.73	.205186	8.97	29	.167931	7.47	.237088	8.75
30	9.141045	7.72	9.205724	8.97	30	9.168379	7.47	9.237613	8.77
31	.141508	7.72	.206262	8.95	31	.168827	7.47	.238139	8.75
32	.141971	7.72	.206799	8.97	32	.169275	7.45	.238664	8.75
33	.142434	7.70	.207337	8.95	33	.169722	7.45	.239189	8.73
34	.142896	7.70	.207874	8.93	34	.170169	7.45	.239713	8.75
35	9.143358	7.70	9.208410	8.95	35	9.170616	7.43	9.240238	8.73
36	.143820	7.70	.208947	8.93	36	.171062	7.45	.240762	8.73
37	.144282	7.68	.209483	8.95	37	.171509	7.43	.241286	8.73
38	.144743	7.68	.210020	8.93	38	.171955	7.42	.241810	8.72
39	.145204	7.68	.210556	8.92	39	.172400	7.43	.242333	8.73
40	9.145665	7.68	9.211091	8.93	40	9.172846	7.42	9.242857	8.72
41	.146126	7.67	.211627	8.92	41	.173291	7.42	.243380	8.72
42	.146586	7.67	.212162	8.92	42	.173736	7.42	.243903	8.72
43	.147046	7.67	.212697	8.92	43	.174181	7.42	.244426	8.72
44	.147506	7.67	.213232	8.92	44	.174626	7.40	.244949	8.70
45	9.147966	7.65	9.213767	8.90	45	9.175070	7.40	9.245471	8.72
46	.148425	7.65	.214301	8.92	46	.175514	7.40	.245994	8.70
47	.148884	7.65	.214836	8.90	47	.175958	7.40	.246516	8.70
48	.149343	7.63	.215370	8.90	48	.176402	7.38	.247038	8.68
49	.149801	7.63	.215904	8.88	49	.176845	7.38	.247559	8.70
50	9.150259	7.63	9.216437	8.90	50	9.177288	7.38	9.248081	8.68
51	.150717	7.63	.216971	8.88	51	.177731	7.38	.248602	8.68
52	.151175	7.63	.217504	8.88	52	.178174	7.37	.249123	8.68
53	.151633	7.62	.218037	8.88	53	.178616	7.37	.249644	8.68
54	.152090	7.62	.218570	8.87	54	.179058	7.37	.250165	8.68
55	9.152547	7.60	9.219102	8.88	55	9.179500	7.37	9.250686	8.67
56	.153003	7.62	.219635	8.87	56	.179942	7.35	.251206	8.67
57	.153460	7.60	.220167	8.87	57	.180383	7.37	.251726	8.67
58	.153916	7.60	.220699	8.87	58	.180825	7.33	.252246	8.67
59	.154372	7.60	.221231	8.85	59	.181265	7.35	.252766	8.67
60	9.154828		9.221762		60	9.181706		9.253286	

TABLE 57. — *Continued*

LOGARITHMIC VERSED SINES AND EXTERNAL SECANTS

32°					33°				
M.	Vers.	D. 1″.	Exsec.	D. 1″.	M.	Vers.	D. 1″.	Exsec.	D. 1″.
0	9.181706	7.35	9.253286	8.65	0	9.207714	7.10	9.284122	8.48
1	.182147	7.33	.253805	8.65	1	.208140	7.10	.284631	8.47
2	.182587	7.33	.254324	8.65	2	.208566	7.10	.285139	8.47
3	.183027	7.32	.254843	8.65	3	.208992	7.10	.285647	8.47
4	.183466	7.33	.255362	8.65	4	.209418	7.08	.286155	8.47
5	9.183906	7.32	9.255881	8.63	5	9.209843	7.08	9.286663	8.45
6	.184345	7.32	.256399	8.65	6	.210268	7.08	.287170	8.47
7	.184784	7.32	.25 18	8.63	7	.210693	7.08	.287678	8.45
8	.185223	7.32	.257436	8.63	8	.211118	7.08	.288185	8.45
9	.185662	7.30	.257954	8.62	9	.211543	7.07	.288692	8.45
10	9.186100	7.30	9.258471	8.63	10	9.211967	7.07	9.289199	8.43
11	.186538	7.30	.258989	8.62	11	.212391	7.07	.289705	8.45
12	.186976	7.28	.259506	8.62	12	.212815	7.07	.290212	8.43
13	.187413	7.30	.260023	8.62	13	.213239	7.05	.290718	8.43
14	.187851	7.28	.260540	8.62	14	.213662	7.05	.291224	8.43
15	9.188288	7.27	9.261057	8.62	15	9.214085	7.05	9.291730	8.43
16	.188724	7.28	.261574	8.60	16	.214508	7.05	.292236	8.43
17	.189161	7.27	.262090	8.60	17	.214931	7.05	.292742	8.42
18	.189597	7.28	.262606	8.60	18	.215354	7.03	.293247	8.43
19	.190034	7.25	.263122	8.60	19	.215776	7.03	.293753	8.42
20	9.190469	7.27	9.263638	8.60	20	9.216198	7.03	9.294258	8.42
21	.190905	7.27	.264154	8.58	21	.216620	7.03	.294763	8.42
22	.191341	7.25	.264669	8.58	22	.217042	7.02	.295268	8.40
23	.191776	7.25	.265184	8.60	23	.217463	7.02	.295772	8.42
24	.192211	7.23	.265700	8.57	24	.217884	7.02	.296277	8.40
25	9.192645	7.25	9.266214	8.58	25	9.218305	7.02	9.296781	8.40
26	.193080	7.23	.266729	8.58	26	.218726	7.00	.297285	8.40
27	.193514	7.23	.267244	8.57	27	.219146	7.02	.297789	8.40
28	.193948	7.23	.267758	8.57	28	.219567	7.00	.298293	8.40
29	.194382	7.22	.268272	8.57	29	.219987	7.00	.298797	8.38
30	9.194815	7.23	9.268786	8.57	30	9.220407	6.98	9.299300	8.38
31	.195249	7.22	.269300	8.57	31	.220826	7.00	.299803	8.40
32	.195682	7.22	.269814	8.55	32	.221246	6.98	.300307	8.37
33	.196115	7.20	.270327	8.55	33	.221665	6.98	.300809	8.38
34	.196547	7.22	.270840	8.57	34	.222084	6.98	.301312	8.38
35	9.196980	7.20	9.271354	8.53	35	9.222503	6.97	9.301815	8.37
36	.197412	7.20	.271866	8.55	36	.222921	6.98	.302317	8.38
37	.197844	7.18	.272379	8.55	37	.223340	6.97	.302820	8.37
38	.198275	7.20	.272892	8.53	38	.223758	6.97	.303322	8.37
39	.198707	7.18	.273404	8.53	39	.224176	6.95	.303824	8.35
40	9.199138	7.18	9.273916	8.53	40	9.224593	6.97	9.304325	8.37
41	.199569	7.18	.274428	8.53	41	.225011	6.95	.304827	8.35
42	.200000	7.17	.274940	8.53	42	.225428	6.95	.305328	8.37
43	.200430	7.18	.275452	8.52	43	.225845	6.95	.305830	8.35
44	.200861	7.17	.275963	8.52	44	.226262	6.93	.306331	8.35
45	9.201291	7.15	9.276474	8.53	45	9.226678	6.95	9.306832	8.35
46	.201720	7.17	.276986	8.50	46	.227095	6.93	.307333	8.33
47	.202150	7.15	.277496	8.52	47	.227511	6.93	.307833	8.35
48	.202579	7.15	.278007	8.52	48	.227927	6.92	.308334	8.33
49	.203008	7.15	.278518	8.50	49	.228342	6.93	.308834	8.33
50	9.203437	7.15	9.279028	8.50	50	9.228758	6.92	9.309334	8.33
51	.203866	7.13	.279538	8.50	51	.229173	6.92	.309834	8.33
52	.204294	7.15	.280048	8.50	52	.229588	6.92	.310334	8.33
53	.204723	7.13	.280558	8.50	53	.230003	6.92	.310834	8.32
54	.205151	7.12	.281068	8.48	54	.230418	6.90	.311333	8.32
55	9.205578	7.13	9.281577	8.50	55	9.230832	6.90	9.311832	8.32
56	.206006	7.12	.282087	8.48	56	.231246	6.90	.312331	8.32
57	.206433	7.12	.282596	8.48	57	.231660	6.90	.312830	8.32
58	.206860	7.12	.283105	8.48	58	.232074	6.88	.313329	8.30
59	.207287	7.12	.283614	8.47	59	.232487	6.90	.313828	
60	9.207714		9.284122		60	9.232901		9.314326	

TABLE 57. — *Continued*

LOGARITHMIC VERSED SINES AND EXTERNAL SECANTS

34°					35°				
M.	Vers.	D. 1″.	Exsec.	D. 1″.	M.	Vers.	D. 1″.	Exsec.	D. 1″.
0	9.232901	6.88	9.314326	8.32	0	9.257314	6.67	9.343949	8.15
1	.233314	6.88	.314825	8.30	1	.257714	6.68	.344438	8.15
2	.233727	6.87	.315323	8.30	2	.258115	6.67	.344927	8.15
3	.234139	6.88	.315821	8.30	3	.258515	6.67	.345416	8.13
4	.234552	6.87	.316319	8.30	4	.258915	6.65	.345904	8.15
5	9.234964	6.87	9.316817	8.28	5	9.259314	6.67	9.346393	8.13
6	.235376	6.87	.317314	8.28	6	.259714	6.65	.346881	8.13
7	.235788	6.85	.317811	8.30	7	.260113	6.65	.347369	8.13
8	.236199	6.87	.318309	8.28	8	.260512	6.65	.347857	8.13
9	.236611	6.85	.318806	8.28	9	.260911	6.65	.348345	8.13
10	9.237022	6.85	9.319303	8.27	10	9.261310	6.65	9.348833	8.13
11	.237433	6.85	.319799	8.28	11	.261709	6.63	.349321	8.12
12	.237844	6.83	.320296	8.27	12	.262107	6.63	.349808	8.12
13	.238254	6.85	.320792	8.28	13	.262505	6.63	.350295	8.12
14	.238665	6.83	.321289	8.27	14	.262903	6.63	.350782	8.12
15	9.239075	6.83	9.321785	8.27	15	9.263301	6.62	9.351269	8.12
16	.239485	6.82	.322281	8.25	16	.263698	6.63	.351756	8.12
17	.239894	6.83	.322776	8.27	17	.264096	6.62	.352243	8.12
18	.240304	6.82	.323272	8.27	18	.264493	6.62	.352730	8.10
19	.240713	6.82	.323768	8.25	19	.264890	6.62	.353216	8.10
20	9.241122	6.82	9.324263	8.25	20	9.265287	6.60	9.353702	8.10
21	.241531	6.82	.324758	8.25	21	.265683	6.62	.354188	8.10
22	.241940	6.80	.325253	8.25	22	.266080	6.60	.354674	8.10
23	.242348	6.80	.325748	8.25	23	.266476	6.60	.355160	8.10
24	.242756	6.80	.326243	8.23	24	.266872	6.58	.355646	8.08
25	9.243164	6.80	9.326737	8.25	25	9.267267	6.60	9.356131	8.10
26	.243572	6.80	.327232	8.23	26	.267663	6.58	.356617	8.08
27	.243980	6.78	.327726	8.23	27	.268058	6.58	.357102	8.08
28	.244387	6.78	.328220	8.23	28	.268453	6.58	.357587	8.08
29	.244794	6.78	.328714	8.22	29	.268848	6.58	.358072	8.08
30	9.245201	6.78	9.329207	8.23	30	9.269243	6.58	9.358557	8.08
31	.245608	6.77	.329701	8.23	31	.269638	6.57	.359042	8.07
32	.246014	6.78	.330195	8.22	32	.270032	6.57	.359526	8.08
33	.246421	6.77	.330688	8.22	33	.270426	6.57	.360011	8.07
34	.246827	6.77	.331181	8.22	34	.270820	6.57	.360495	8.07
35	9.247233	6.77	9.331674	8.22	35	9.271214	6.57	9.360979	8.07
36	.247639	6.75	.332167	8.20	36	.271608	6.55	.361463	8.07
37	.248044	6.75	.332659	8.22	37	.272001	6.55	.361947	8.07
38	.248449	6.75	.333152	8.20	38	.272394	6.55	.362431	8.05
39	.248854	6.75	.333644	8.22	39	.272787	6.55	.362914	8.07
40	9.249259	6.75	9.334137	8.20	40	9.273180	6.53	9.363398	8.05
41	.249664	6.73	.334629	8.20	41	.273572	6.55	.363881	8.05
42	.250068	6.75	.335121	8.18	42	.273965	6.53	.364364	8.05
43	.250473	6.73	.335612	8.20	43	.274357	6.53	.364847	8.05
44	.250877	6.73	.336104	8.18	44	.274749	6.53	.365330	8.05
45	9.251281	6.72	9.336595	8.20	45	9.275141	6.52	9.365813	8.03
46	.251684	6.73	.337087	8.18	46	.275532	6.53	.366295	8.05
47	.252088	6.72	.337578	8.18	47	.275924	6.52	.366778	8.03
48	.252491	6.72	.338069	8.18	48	.276315	6.52	.367260	8.03
49	.252894	6.72	.338560	8.17	49	.276706	6.52	.367742	8.03
50	9.253297	6.70	9.339050	8.18	50	9.277097	6.52	9.368224	8.03
51	.253699	6.72	.339541	8.17	51	.277488	6.50	.368706	8.03
52	.254102	6.70	.340031	8.18	52	.277878	6.50	.369188	8.03
53	.254504	6.70	.340522	8.17	53	.278268	6.50	.369670	8.02
54	.254906	6.70	.341012	8.17	54	.278658	6.50	.370151	8.02
55	9.255308	6.68	9.341502	8.15	55	9.279048	6.50	9.370632	8.03
56	.255709	6.70	.341991	8.17	56	.279438	6.48	.371114	8.02
57	.256111	6.68	.342481	8.17	57	.279827	6.50	.371595	8.02
58	.256512	6.68	.342971	8.15	58	.280217	6.48	.372076	8.00
59	.256913	6.68	.343460	8.15	59	.280606	6.48	.372556	8.02
60	9.257314		9.343949		60	9.280995		9.373037	

TABLE 57. — *Continued*

LOGARITHMIC VERSED SINES AND EXTERNAL SECANTS

36°					37°				
M.	Vers.	D. 1″.	Exsec.	D. 1″.	M.	Vers.	D. 1″.	Exsec.	D. 1″.
0	9.280995	6.47	9.373037	8.02	0	9.303983	6.28	9.401634	7.88
1	.281383	6.48	.373518	8.00	1	.304360	6.30	.402107	7.88
2	.281772	6.47	.373998	8.00	2	.304738	6.28	.402580	7.87
3	.282160	6.47	.374478	8.00	3	.305115	6.28	.403052	7.87
4	.282548	6.47	.374958	8.00	4	.305492	6.27	.403524	7.88
5	9.282936	6.47	9.375438	8.00	5	9.305868	6.28	9.403997	7.87
6	.283324	6.47	.375918	8.00	6	.306245	6.27	.404469	7.87
7	.283712	6.45	.376398	7.98	7	.306621	6.28	.404941	7.85
8	.284099	6.45	.376877	8.00	8	.306998	6.27	.405412	7.87
9	.284486	6.45	.377357	7.98	9	.307374	6.25	.405884	7.87
10	9.284873	6.45	9.377836	7.98	10	9.307749	6.27	9.406356	7.85
11	.285260	6.45	.378315	7.98	11	.308125	6.27	.406827	7.85
12	.285647	6.43	.378794	7.98	12	.308501	6.25	.407298	7.87
13	.286033	6.43	.379273	7.98	13	.308876	6.25	.407770	7.85
14	.286419	6.43	.379752	7.98	14	.309251	6.25	.408241	7.85
15	9.286805	6.43	9.380231	7.97	15	9.309626	6.25	9.408712	7.85
16	.287191	6.43	.380709	7.98	16	.310001	6.23	.409183	7.83
17	.287577	6.42	.381188	7.97	17	.310375	6.25	.409653	7.85
18	.287962	6.43	.381666	7.97	18	.310750	6.23	.410124	7.83
19	.288348	6.42	.382144	7.97	19	.311124	6.23	.410594	7.85
20	9.288733	6.42	9.382622	7.97	20	9.311498	6.23	9.411065	7.83
21	.289118	6.40	.383100	7.95	21	.311872	6.22	.411535	7.83
22	.289502	6.42	.383577	7.97	22	.312245	6.23	.412005	7.83
23	.289887	6.40	.384055	7.95	23	.312619	6.22	.412475	7.83
24	.290271	6.40	.384532	7.97	24	.312992	6.22	.412945	7.83
25	9.290655	6.40	9.385010	7.95	25	9.313365	6.22	9.413415	7.82
26	.291039	6.40	.385487	7.95	26	.313738	6.22	.413884	7.83
27	.291423	6.40	.385964	7.95	27	.314111	6.22	.414354	7.82
28	.291807	6.38	.386441	7.95	28	.314484	6.20	.414823	7.83
29	.292190	6.38	.386918	7.93	29	.314856	6.20	.415293	7.82
30	9.292573	6.38	9.387394	7.95	30	9.315228	6.20	9.415762	7.82
31	.292956	6.38	.387871	7.93	31	.315600	6.20	.416231	7.82
32	.293339	6.38	.388347	7.95	32	.315972	6.20	.416700	7.80
33	.293722	6.37	.388824	7.93	33	.316344	6.20	.417168	7.82
34	.294104	6.37	.389300	7.93	34	.316716	6.18	.417637	7.82
35	9.294486	6.37	9.389776	7.93	35	9.317087	6.18	9.418106	7.80
36	.294868	6.37	.390252	7.92	36	.317458	6.18	.418574	7.80
37	.295250	6.37	.390727	7.93	37	.317829	6.18	.419042	7.82
38	.295632	6.37	.391203	7.92	38	.318200	6.18	.419511	7.80
39	.296014	6.35	.391678	7.93	39	.318571	6.17	.419979	7.80
40	9.296395	6.35	9.392154	7.92	40	9.318941	6.17	9.420447	7.80
41	.296776	6.35	.392629	7.92	41	.319311	6.18	.420915	7.78
42	.297157	6.35	.393104	7.92	42	.319682	6.15	.421382	7.80
43	.297538	6.33	.393579	7.92	43	.320051	6.17	.421850	7.78
44	.297918	6.35	.394054	7.92	44	.320421	6.17	.422317	7.80
45	9.298299	6.33	9.394529	7.90	45	9.320791	6.15	9.422785	7.78
46	.298679	6.33	.395003	7.92	46	.321160	6.17	.423252	7.78
47	.299059	6.33	.395478	7.90	47	.321530	6.15	.423719	7.78
48	.299439	6.33	.395952	7.90	48	.321899	6.13	.424186	7.78
49	.299819	6.32	.396426	7.90	49	.322267	6.15	.424653	7.78
50	9.300198	6.32	9.396900	7.90	50	9.322636	6.15	9.425120	7.78
51	.300577	6.33	.397374	7.90	51	.323005	6.13	.425587	7.77
52	.300957	6.30	.397848	7.90	52	.323373	6.13	.426053	7.78
53	.301335	6.32	.398322	7.88	53	.323741	6.13	.426520	7.77
54	.301714	6.32	.398795	7.90	54	.324109	6.13	.426986	7.77
55	9.302093	6.30	9.399269	7.88	55	9.324477	6.13	9.427452	7.77
56	.302471	6.30	.399742	7.88	56	.324845	6.12	.427918	7.77
57	.302849	6.30	.400215	7.88	57	.325212	6.13	.428384	7.77
58	.303227	6.30	.400688	7.88	58	.325580	6.12	.428850	7.77
59	.303605	6.30	.401161	7.88	59	.325947	6.12	.429316	7.7
60	9.303983		9.401634		60	9.326314		9.429782	

TABLE 57.—*Continued*

LOGARITHMIC VERSED SINES AND EXTERNAL SECANTS

38°					39°				
M.	Vers.	D. 1″.	Exsec.	D. 1″.	M.	Vers.	D. 1″.	Exsec.	D. 1″.
0	9.326314	6.12	9.429782	7.75	0	9.348021	5.93	9.457518	7.65
1	.326681	6.10	.430247	7.77	1	.348377	5.95	.457977	7.65
2	.327047	6.12	.430713	7.75	2	.348734	5.93	.458436	7.65
3	.327414	6.10	.431178	7.75	3	.349090	5.93	.458895	7.63
4	.327780	6.10	.431643	7.75	4	.349446	5.93	.459353	7.65
5	9.328146	6.10	9.432108	7.75	5	9.349802	5.93	9.459812	7.63
6	.328512	6.10	.432573	7.75	6	.350158	5.93	.460270	7.65
7	.328878	6.08	.433038	7.75	7	.350514	5.92	.460729	7.63
8	.329243	6.10	.433503	7.73	8	.350869	5.93	.461187	7.63
9	.329609	6.08	.433967	7.75	9	.351225	5.92	.461645	7.63
10	9.329974	6.08	9.434432	7.73	10	9.351580	5.92	9.462103	7.63
11	.330339	6.08	.434896	7.75	11	.351935	5.92	.462561	7.63
12	.330704	6.08	.435361	7.73	12	.352290	5.90	.463019	7.63
13	.331069	6.07	.435825	7.73	13	.352644	5.92	.463477	7.62
14	.331433	6.08	.436289	7.73	14	.352999	5.90	.463934	7.63
15	9.331798	6.07	9.436753	7.73	15	9.353353	5.90	9.464392	7.62
16	.332162	6.07	.437217	7.72	16	.353707	5.92	.464849	7.63
17	.332526	6.07	.437680	7.73	17	.354062	5.88	.465307	7.62
18	.332890	6.07	.438144	7.72	18	.354415	5.90	.465764	7.62
19	.333254	6.05	.438608	7.72	19	.354769	5.90	.466221	7.62
20	9.333617	6.07	9.439071	7.72	20	9.355123	5.88	9.466678	7.62
21	.333981	6.05	.439534	7.72	21	.355476	5.88	.467135	7.62
22	.334344	6.05	.439997	7.72	22	.355829	5.88	.467592	7.62
23	.334707	6.05	.440460	7.72	23	.356182	5.88	.468049	7.60
24	.335070	6.03	.440923	7.72	24	.356535	5.88	.468506	7.60
25	9.335432	6.05	9.441386	7.72	25	9.356888	5.88	9.468962	7.60
26	.335795	6.03	.441849	7.72	26	.357241	5.87	.469418	7.62
27	.336157	6.03	.442312	7.70	27	.357593	5.87	.469875	7.60
28	.336519	6.03	.442774	7.72	28	.357945	5.87	.470331	7.60
29	.336881	6.03	.443237	7.70	29	.358297	5.87	.470787	7.60
30	9.337243	6.03	9.443699	7.70	30	9.358649	5.87	9.471243	7.60
31	.337605	6.02	.444161	7.70	31	.359001	5.87	.471699	7.60
32	.337966	6.03	.444623	7.70	32	.359353	5.85	.472155	7.60
33	.338328	6.02	.445085	7.70	33	.359704	5.87	.472611	7.60
34	.338689	6.02	.445547	7.70	34	.360056	5.85	.473067	7.58
35	9.339050	6.02	9.446009	7.68	35	9.360407	5.85	9.473522	7.60
36	.339411	6.00	.446470	7.70	36	.360758	5.83	.473978	7.58
37	.339771	6.02	.446932	7.68	37	.361108	5.85	.474433	7.58
38	.340132	6.00	.447393	7.70	38	.361459	5.85	.474888	7.58
39	.340492	6.00	.447855	7.68	39	.361810	5.83	.475343	7.58
40	9.340852	6.00	9.448316	7.68	40	9.362160	5.83	9.475798	7.58
41	.341212	6.00	.448777	7.68	41	.362510	5.83	.476253	7.58
42	.341572	6.00	.449238	7.68	42	.362860	5.83	.476708	7.58
43	.341932	5.98	.449699	7.68	43	.363210	5.83	.477163	7.58
44	.342291	6.00	.450160	7.67	44	.363560	5.82	.477618	7.57
45	9.342651	5.98	9.450620	7.68	45	9.363909	5.83	9.478072	7.58
46	.343010	5.98	.451081	7.67	46	.364259	5.82	.478527	7.57
47	.343369	5.98	.451541	7.68	47	.364608	5.82	.478981	7.57
48	.343728	5.97	.452002	7.67	48	.364957	5.82	.479435	7.58
49	.344086	5.98	.452462	7.67	49	.365306	5.82	.479890	7.57
50	9.344445	5.97	9.452922	7.67	50	9.365655	5.80	9.480344	7.57
51	.344803	5.97	.453382	7.67	51	.366003	5.82	.480798	7.57
52	.345161	5.97	.453842	7.67	52	.366352	5.80	.481252	7.55
53	.345519	5.97	.454302	7.67	53	.366700	5.80	.481705	7.57
54	.345877	5.97	.454762	7.65	54	.367048	5.80	.482159	7.57
55	9.346235	5.95	9.455221	7.67	55	9.367396	5.80	9.482613	7.55
56	.346592	5.97	.455681	7.65	56	.367744	5.78	.483066	7.57
57	.346950	5.95	.456140	7.67	57	.368091	5.80	.483520	7.55
58	.347307	5.95	.456600	7.65	58	.368439	5.78	.483973	7.55
59	.347664	5.95	.457059	7.65	59	.368786	5.78	.484426	7.55
60	9.348021	5.95	9.457518	7.65	60	9.369133		9.484879	7.55

TABLE 57.—*Continued*

LOGARITHMIC VERSED SINES AND EXTERNAL SECANTS

40°					41°				
M.	Vers.	D. 1″.	Exsec.	D. 1″.	M.	Vers.	D. 1″.	Exsec.	D. 1″.
0	9.369133	5.78	9.484879	7.55	0	9.389681	5.62	9.511901	7.45
1	.369480	5.78	.485332	7.55	1	.390018	5.63	.512348	7.47
2	.369827	5.78	.485785	7.55	2	.390356	5.63	.512796	7.45
3	.370174	5.77	.486238	7.55	3	.390694	5.62	.513243	7.47
4	.370520	5.78	.486691	7.55	4	.391031	5.62	.513691	7.45
5	9.370867	5.77	9.487144	7.53	5	9.391368	5.62	9.514138	7.45
6	.371213	5.77	.487596	7.55	6	.391705	5.62	.514585	7.47
7	.371559	5.77	.488049	7.53	7	.392042	5.62	.515033	7.45
8	.371905	5.77	.488501	7.53	8	.392379	5.62	.515480	7.45
9	.372251	5.75	.488953	7.55	9	.392716	5.60	.515927	7.45
10	9.372596	5.77	9.489406	7.53	10	9.393052	5.60	9.516374	7.43
11	.372942	5.75	.489858	7.53	11	.393388	5.60	.516820	7.45
12	.373287	5.75	.490310	7.53	12	.393724	5.62	.517267	7.45
13	.373632	5.75	.490762	7.53	13	.394061	5.58	.517714	7.43
14	.373977	5.75	.491214	7.52	14	.394396	5.60	.518160	7.45
15	9.374322	5.75	9.491665	7.53	15	9.394732	5.60	9.518607	7.43
16	.374667	5.73	.492117	7.53	16	.395068	5.58	.519053	7.45
17	.375011	5.75	.492569	7.52	17	.395403	5.58	.519500	7.43
18	.375356	5.73	.493020	7.52	18	.395738	5.60	.519946	7.43
19	.375700	5.73	.493471	7.53	19	.396074	5.58	.520392	7.43
20	9.376044	5.73	9.493923	7.52	20	9.396409	5.57	9.520838	7.43
21	.376388	5.73	.494374	7.52	21	.396743	5.58	.521284	7.43
22	.376732	5.72	.494825	7.52	22	.397078	5.58	.521730	7.43
23	.377075	5.73	.495276	7.52	23	.397413	5.57	.522176	7.42
24	.377419	5.72	.495727	7.52	24	.397747	5.57	.522621	7.43
25	9.377762	5.72	9.496178	7.50	25	9.398081	5.57	9.523067	7.43
26	.378105	5.72	.496628	7.52	26	.398415	5.57	.523513	7.42
27	.378448	5.72	.497079	7.52	27	.398749	5.57	.523958	7.43
28	.378791	5.70	.497530	7.50	28	.399083	5.57	.524404	7.42
29	.379133	5.72	.497980	7.50	29	.399417	5.55	.524849	7.42
30	9.379476	5.70	9.498430	7.52	30	9.399750	5.57	9.525294	7.42
31	.379818	5.72	.498881	7.50	31	.400084	5.55	.525739	7.42
32	.380161	5.70	.499331	7.50	32	.400417	5.55	.526184	7.42
33	.380503	5.70	.499781	7.50	33	.400750	5.55	.526629	7.42
34	.380845	5.68	.500231	7.50	34	.401083	5.55	.527074	7.42
35	9.381186	5.70	9.500681	7.50	35	9.401416	5.53	9.527519	7.42
36	.381528	5.68	.501131	7.50	36	.401748	5.55	.527964	7.42
37	.381869	5.70	.501581	7.48	37	.402081	5.53	.528409	7.40
38	.382211	5.68	.502030	7.50	38	.402413	5.53	.528853	7.42
39	.382552	5.68	.502480	7.48	39	.402745	5.53	.529298	7.40
40	9.382893	5.68	9.502929	7.50	40	9.403077	5.53	9.529742	7.42
41	.383234	5.67	.503379	7.48	41	.403409	5.53	.530187	7.40
42	.383574	5.68	.503828	7.48	42	.403741	5.53	.530631	7.40
43	.383915	5.67	.504277	7.48	43	.404073	5.52	.531075	7.40
44	.384255	5.67	.504726	7.48	44	.404404	5.53	.531519	7.40
45	9.384595	5.67	9.505175	7.48	45	9.404736	5.52	9.531963	7.40
46	.384935	5.67	.505624	7.48	46	.405067	5.52	.532407	7.40
47	.385275	5.67	.506073	7.48	47	.405398	5.52	.532851	7.40
48	.385615	5.67	.506522	7.48	48	.405729	5.50	.533295	7.40
49	.385955	5.65	.506971	7.47	49	.406059	5.52	.533739	7.38
50	9.386294	5.67	9.507419	7.48	50	9.406390	5.50	9.534182	7.40
51	.386634	5.65	.507868	7.47	51	.406721	5.52	.534626	7.40
52	.386973	5.65	.508316	7.48	52	.407051	5.50	.535070	7.38
53	.387312	5.65	.508765	7.47	53	.407381	5.50	.535513	7.38
54	.387651	5.63	.509213	7.47	54	.407711	5.50	.535956	7.40
55	9.387989	5.65	9.509661	7.47	55	9.408041	5.50	9.536400	7.38
56	.388328	5.63	.510109	7.47	56	.408371	5.48	.536843	7.38
57	.388666	5.65	.510557	7.47	57	.408700	5.50	.537286	7.38
58	.389005	5.63	.511005	7.47	58	.409030	5.48	.537729	7.38
59	.389343	5.63	.511453	7.47	59	.409359	5.48	.538172	7.38
60	9.389681		9.511901		60	9.409688		9.538615	

TABLE 57. — *Continued*

LOGARITHMIC VERSED SINES AND EXTERNAL SECANTS

42°					43°				
M.	Vers.	D. 1″.	Exsec.	D. 1″.	M.	Vers.	D. 1″.	Exsec.	D. 1″.
0	9.409688	5.48	9.538615	7.38	0	9.429181	5.35	9.565053	7.32
1	.410017	5.48	.539058	7.37	1	.429502	5.33	.565492	7.30
2	.410346	5.48	.539500	7.38	2	.429822	5.33	.565930	7.32
3	.410675	5.48	.539943	7.38	3	.430142	5.35	.566369	7.30
4	.411004	5.47	.540386	7.37	4	.430463	5.33	.566807	7.30
5	9.411332	5.47	9.540828	7.38	5	9.430783	5.33	9.567245	7.30
6	.411660	5.48	.541271	7.37	6	.431103	5.32	.567683	7.30
7	.411989	5.47	.541713	7.37	7	.431422	5.33	.568121	7.30
8	.412317	5.45	.542155	7.37	8	.431742	5.33	.568559	7.30
9	.412644	5.47	.542597	7.38	9	.432062	5.32	.568997	7.30
10	9.412972	5.47	9.543040	7.37	10	9.432381	5.32	9.569435	7.30
11	.413300	5.45	.543482	7.37	11	.432700	5.33	.569873	7.30
12	.413627	5.47	.543924	7.37	12	.433020	5.32	.570311	7.28
13	.413955	5.45	.544366	7.35	13	.433339	5.30	.570748	7.30
14	.414282	5.45	.544807	7.37	14	.433657	5.32	.571186	7.30
15	9.414609	5.45	9.545249	7.37	15	9.433976	5.32	9.571624	7.28
16	.414936	5.43	.545691	7.35	16	.434295	5.30	.572061	7.28
17	.415262	5.45	.546132	7.37	17	.434613	5.32	.572498	7.28
18	.415589	5.45	.546574	7.35	18	.434932	5.30	.572936	7.30
19	.415916	5.43	.547015	7.37	19	.435250	5.30	.573373	7.28
20	9.416242	5.43	9.547457	7.35	20	9.435568	5.30	9.573810	7.28
21	.416568	5.43	.547898	7.35	21	.435886	5.30	.574247	7.30
22	.416894	5.43	.548339	7.37	22	.436204	5.28	.574685	7.28
23	.417220	5.43	.548781	7.35	23	.436521	5.30	.575122	7.27
24	.417546	5.42	.549222	7.35	24	.436839	5.28	.575558	7.28
25	9.417871	5.43	9.549663	7.35	25	9.437156	5.28	9.575995	7.28
26	.418197	5.42	.550104	7.33	26	.437473	5.30	.576432	7.28
27	.418522	5.43	.550544	7.35	27	.437791	5.27	.576869	7.28
28	.418848	5.42	.550985	7.35	28	.438107	5.28	.577306	7.27
29	.419173	5.42	.551426	7.35	29	.438424	5.28	.577742	7.28
30	9.419498	5.40	9.551867	7.33	30	9.438741	5.28	9.578179	7.27
31	.419822	5.42	.552307	7.35	31	.439058	5.27	.578615	7.28
32	.420147	5.40	.552748	7.33	32	.439374	5.27	.579052	7.27
33	.420471	5.42	.553188	7.35	33	.439690	5.28	.579488	7.27
34	.420796	5.40	.553629	7.33	34	.440007	5.27	.579924	7.28
35	9.421120	5.40	9.554069	7.33	35	9.440323	5.27	9.580361	7.27
36	.421444	5.40	.554509	7.33	36	.440639	5.25	.580797	7.27
37	.421768	5.40	.554949	7.33	37	.440954	5.27	.581233	7.27
38	.422092	5.40	.555389	7.33	38	.441270	5.27	.581669	7.27
39	.422416	5.38	.555829	7.33	39	.441586	5.25	.582105	7.27
40	9.422739	5.40	9.556269	7.33	40	9.441901	5.25	9.582541	7.27
41	.423063	5.38	.556709	7.33	41	.442216	5.25	.582977	7.27
42	.423386	5.38	.557149	7.33	42	.442531	5.25	.583413	7.25
43	.423709	5.38	.557589	7.32	43	.442846	5.25	.583848	7.27
44	.424032	5.38	.558028	7.33	44	.443161	5.25	.584284	7.27
45	9.424355	5.37	9.558468	7.32	45	9.443476	5.23	9.584720	7.25
46	.424677	5.38	.558907	7.33	46	.443790	5.25	.585155	7.27
47	.425000	5.37	.559347	7.32	47	.444105	5.23	.585591	7.25
48	.425322	5.38	.559786	7.33	48	.444419	5.23	.586026	7.27
49	.425645	5.37	.560226	7.32	49	.444733	5.23	.586462	7.25
50	9.425967	5.37	9.560665	7.32	50	9.445047	5.23	9.586897	7.25
51	.426289	5.37	.561104	7.32	51	.445361	5.23	.587332	7.25
52	.426611	5.37	.561543	7.32	52	.445675	5.23	.587767	7.27
53	.426933	5.35	.561982	7.32	53	.445989	5.22	.588203	7.25
54	.427254	5.37	.562421	7.32	54	.446302	5.23	.588638	7.25
55	9.427576	5.35	9.562860	7.32	55	9.446616	5.22	9.589073	7.25
56	.427897	5.35	.563299	7.32	56	.446929	5.22	.589508	7.23
57	.428218	5.35	.563738	7.30	57	.447242	5.22	.589942	7.25
58	.428539	5.35	.564176	7.32	58	.447555	5.22	.590377	7.25
59	.428860	5.35	.564615	7.30	59	.447868	5.22	.590812	7.25
60	9.429181		9.565053		60	9.448181		9.591247	

TABLE 57. — *Continued*

LOGARITHMIC VERSED SINES AND EXTERNAL SECANTS

44°					45°				
M.	Vers.	D. 1″.	Exsec.	D. 1″.	M.	Vers.	D. 1″.	Exsec.	D. 1″.
0	9.448181	5.20	9.591247	7.23	0	9.466709	5.08	9.617224	7.20
1	.448493	5.22	.591681	7.25	1	.467014	5.08	.617656	7.18
2	.448806	5.20	.592116	7.25	2	.467319	5.08	.618087	7.18
3	.449118	5.22	.592551	7.23	3	.467624	5.07	.618518	7.18
4	.449431	5.20	.592985	7.23	4	.467928	5.08	.618949	7.18
5	9.449743	5.20	9.593419	7.25	5	9.468233	5.07	9.619380	7.18
6	.450055	5.18	.593854	7.23	6	.468537	5.07	.619811	7.18
7	.450366	5.20	.594288	7.23	7	.468841	5.07	.620242	7.18
8	.450678	5.20	.594722	7.23	8	.469145	5.07	.620673	7.18
9	.450990	5.18	.595156	7.25	9	.469449	5.07	.621104	7.18
10	9.451301	5.18	9.595591	7.23	10	9.469753	5.07	9.621535	7.18
11	.451612	5.20	.596025	7.23	11	.470057	5.05	.621966	7.17
12	.451924	5.18	.596459	7.23	12	.470360	5.07	.622396	7.18
13	.452235	5.18	.596893	7.22	13	.470664	5.05	.622827	7.18
14	.452546	5.17	.597326	7.23	14	.470967	5.05	.623258	7.17
15	9.452856	5.18	9.597760	7.23	15	9.471270	5.05	9.623688	7.18
16	.453167	5.18	.598194	7.23	16	.471573	5.05	.624119	7.17
17	.453478	5.17	.598628	7.22	17	.471876	5.05	.624549	7.18
18	.453788	5.17	.599061	7.23	18	.472179	5.05	.624980	7.17
19	.454098	5.17	.599495	7.22	19	.472482	5.03	.625410	7.18
20	9.454408	5.17	9.599928	7.23	20	9.472784	5.05	9.625841	7.17
21	.454718	5.17	.600362	7.22	21	.473087	5.03	.626271	7.17
22	.455028	5.17	.600795	7.23	22	.473389	5.03	.626701	7.17
23	.455338	5.17	.601229	7.22	23	.473691	5.03	.627131	7.17
24	.455648	5.15	.601662	7.22	24	.473993	5.03	.627561	7.17
25	9.455957	5.17	9.602095	7.22	25	9.474295	5.03	9.627991	7.17
26	.456267	5.15	.602528	7.23	26	.474597	5.03	.628421	7.17
27	.456576	5.15	.602962	7.22	27	.474899	5.02	.628851	7.17
28	.456885	5.15	.603395	7.22	28	.475200	5.03	.629281	7.17
29	.457194	5.15	.603828	7.22	29	.475502	5.02	.629711	7.17
30	9.457503	5.13	9.604261	7.22	30	9.475803	5.02	9.630141	7.17
31	.457811	5.15	.604694	7.20	31	.476104	5.02	.630571	7.17
32	.458120	5.15	.605126	7.22	32	.476405	5.02	.631001	7.15
33	.458429	5.13	.605559	7.22	33	.476706	5.02	.631430	7.17
34	.458737	5.13	.605992	7.22	34	.477007	5.02	.631860	7.17
35	9.459045	5.13	9.606425	7.20	35	9.477308	5.00	9.632290	7.15
36	.459353	5.13	.606857	7.22	36	.477608	5.02	.632719	7.17
37	.459661	5.13	.607290	7.20	37	.477909	5.00	.633149	7.15
38	.459969	5.13	.607722	7.22	38	.478209	5.00	.633578	7.17
39	.460277	5.12	.608155	7.20	39	.478509	5.00	.634008	7.15
40	9.460584	5.13	9.608587	7.22	40	9.478809	5.00	9.634437	7.15
41	.460892	5.12	.609020	7.20	41	.479109	5.00	.634866	7.17
42	.461199	5.12	.609452	7.20	42	.479409	5.00	.635296	7.15
43	.461506	5.12	.609884	7.20	43	.479709	5.00	.635725	7.15
44	.461813	5.12	.610316	7.22	44	.480009	4.98	.636154	7.15
45	9.462120	5.12	9.610749	7.20	45	9.480308	5.00	9.636583	7.15
46	.462427	5.12	.611181	7.20	46	.480608	4.98	.637012	7.15
47	.462734	5.10	.611613	7.20	47	.480907	4.98	.637441	7.15
48	.463040	5.12	.612045	7.20	48	.481206	4.98	.637870	7.15
49	.463347	5.10	.612477	7.18	49	.481505	4.98	.638299	7.15
50	9.463653	5.10	9.612908	7.20	50	9.481804	4.98	9.638728	7.15
51	.463959	5.10	.613340	7.20	51	.482103	4.97	.639157	7.15
52	.464265	5.10	.613772	7.20	52	.482401	4.98	.639586	7.15
53	.464571	5.10	.614204	7.18	53	.482700	4.97	.640015	7.13
54	.464877	5.10	.614635	7.20	54	.482998	4.97	.640443	7.15
55	9.465183	5.08	9.615067	7.20	55	9.483296	4.98	9.640872	7.15
56	.465488	5.10	.615499	7.18	56	.483595	4.97	.641301	7.13
57	.465794	5.08	.615930	7.20	57	.483893	4.97	.641729	7.15
58	.466099	5.08	.616362	7.18	58	.484191	4.95	.642158	7.13
59	.466404	5.08	.616793	7.18	59	.484488	4.97	.642586	7.15
60	9.466709		9.617224		60	9.484786		9.643015	

TABLE 57. — *Continued*

LOGARITHMIC VERSED SINES AND EXTERNAL SECANTS

46°					47°				
M.	Vers.	D. 1″.	Exsec.	D. 1″.	M.	Vers.	D. 1″.	Exsec.	D. 1″.
0	9.484786	4.97	9.643015	7.13	0	9.502429	4.85	9.668646	7.10
1	.485084	4.95	.643443	7.15	1	.502720	4.83	.669072	7.10
2	.485381	4.95	.643872	7.13	2	.503010	4.83	.669498	7.10
3	.485678	4.97	.644300	7.13	3	.503300	4.85	.669924	7.10
4	.485976	4.95	.644728	7.13	4	.503591	4.83	.670350	7.10
5	9.486273	4.95	9.645156	7.15	5	9.503881	4.83	9.670776	7.08
6	.486570	4.93	.645585	7.13	6	.504171	4.82	.671201	7.10
7	.486866	4.95	.646013	7.13	7	.504460	4.83	.671627	7.10
8	.487163	4.95	.646441	7.13	8	.504750	4.83	.672053	7.10
9	.487460	4.93	.646869	7.13	9	.505040	4.82	.672479	7.08
10	9.487756	4.95	9.647297	7.13	10	9.505329	4.82	9.672904	7.10
11	.488053	4.93	.647725	7.13	11	.505618	4.83	.673330	7.10
12	.488349	4.93	.648153	7.13	12	.505908	4.82	.673756	7.08
13	.488645	4.93	.648581	7.12	13	.506197	4.82	.674181	7.10
14	.488941	4.93	.649009	7.13	14	.506486	4.82	.674607	7.08
15	9.489237	4.93	9.649436	7.13	15	9.506775	4.80	9.675032	7.10
16	.489533	4.92	.649864	7.13	16	.507063	4.82	.675458	7.08
17	.489828	4.93	.650292	7.12	17	.507352	4.80	.675883	7.10
18	.490124	4.92	.650720	7.13	18	.507640	4.82	.676309	7.08
19	.490419	4.92	.651147	7.12	19	.507929	4.80	.676734	7.08
20	9.490714	4.93	9.651575	7.12	20	9.508217	4.80	9.677159	7.08
21	.491010	4.92	.652002	7.13	21	.508505	4.80	.677584	7.10
22	.491305	4.92	.652430	7.12	22	.508793	4.80	.678010	7.08
23	.491600	4.90	.652857	7.13	23	.509081	4.80	.678435	7.08
24	.491894	4.92	.653285	7.12	24	.509369	4.80	.678860	7.08
25	9.492189	4.92	9.653712	7.13	25	9.509657	4.80	9.679285	7.08
26	.492484	4.90	.654140	7.12	26	.509945	4.78	.679710	7.10
27	.492778	4.90	.654567	7.12	27	.510232	4.80	.680136	7.08
28	.493072	4.92	.654994	7.12	28	.510520	4.78	.680561	7.08
29	.493367	4.90	.655421	7.13	29	.510807	4.78	.680986	7.08
30	9.493661	4.90	9.655849	7.12	30	9.511094	4.78	9.681411	7.08
31	.493955	4.90	.656276	7.12	31	.511381	4.78	.681836	7.07
32	.494249	4.88	.656703	7.12	32	.511668	4.78	.682260	7.08
33	.494542	4.90	.657130	7.12	33	.511955	4.77	.682685	7.08
34	.494836	4.90	.657557	7.12	34	.512241	4.78	.683110	7.08
35	9.495130	4.88	9.657984	7.12	35	9.512528	4.78	9.683535	7.08
36	.495423	4.88	.658411	7.12	36	.512815	4.77	.683960	7.08
37	.495716	4.88	.658838	7.12	37	.513101	4.77	.684385	7.07
38	.496009	4.88	.659265	7.10	38	.513387	4.77	.684809	7.08
39	.496302	4.88	.659691	7.12	39	.513673	4.77	.685234	7.08
40	9.496595	4.88	9.660118	7.12	40	9.513959	4.77	9.685659	7.07
41	.496888	4.88	.660545	7.12	41	.514245	4.77	.686083	7.08
42	.497181	4.87	.660972	7.10	42	.514531	4.77	.686508	7.08
43	.497473	4.88	.661398	7.12	43	.514817	4.75	.686933	7.07
44	.497766	4.87	.661825	7.12	44	.515102	4.77	.687357	7.08
45	9.498058	4.87	9.662252	7.10	45	9.515388	4.75	9.687782	7.07
46	.498350	4.88	.662678	7.12	46	.515673	4.77	.688206	7.08
47	.498643	4.87	.663105	7.10	47	.515959	4.75	.688631	7.07
48	.498935	4.85	.663531	7.12	48	.516244	4.75	.689055	7.07
49	.499226	4.87	.663958	7.10	49	.516529	4.75	.689479	7.08
50	9.499518	4.87	9.664384	7.10	50	9.516814	4.73	9.689904	7.07
51	.499810	4.85	.664810	7.12	51	.517098	4.75	.690328	7.07
52	.500101	4.87	.665237	7.10	52	.517383	4.75	.690752	7.08
53	.500393	4.85	.665663	7.10	53	.517668	4.73	.691177	7.07
54	.500684	4.85	.666089	7.10	54	.517952	4.73	.691601	7.07
55	9.500975	4.85	9.666515	7.12	55	9.518236	4.75	9.692025	7.07
56	.501266	4.85	.666942	7.10	56	.518521	4.73	.692449	7.07
57	.501557	4.85	.667368	7.10	57	.518805	4.73	.692873	7.08
58	.501848	4.85	.667794	7.10	58	.519089	4.73	.693298	7.07
59	.502139	4.83	.668220	7.10	59	.519373	4.73	.693722	7.07
60	9.502429		9.668646		60	9.519657		9.694145	

TABLE 57. — *Continued*

LOGARITHMIC VERSED SINES AND EXTERNAL SECANTS

48°				49°			
Vers.	D. 1″.	Exsec.	D. 1″.	M.	Vers.	D. 1″.	Exsec.	D. 1″.
9.519657	4.72	9.694146	7.07	0	9.536484	4.62	9.719541	7.05
.519940	4.73	.694570	7.07	1	.536761	4.62	.719964	7.03
.520224	4.72	.694994	7.07	2	.537038	4.62	.720386	7.05
.520507	4.73	.695418	7.07	3	.537315	4.62	.720809	7.03
.520791	4.72	.695842	7.07	4	.537592	4.62	.721231	7.03
9.521074	4.72	9.696266	7.05	5	9.537869	4.60	9.721653	7.05
.521357	4.72	.696689	7.07	6	.538145	4.62	.722076	7.03
.521640	4.72	.697113	7.07	7	.538422	4.60	.722498	7.05
.521923	4.72	.697537	7.07	8	.538698	4.60	.722921	7.03
.522206	4.70	.697961	7.07	9	.538974	4.62	.723343	7.03
9.522488	4.72	9.698385	7.07	10	9.539251	4.60	9.723765	7.05
.522771	4.72	.698809	7.05	11	.539527	4.60	.724188	7.03
.523054	4.70	.699232	7.07	12	.539803	4.60	.724610	7.03
.523336	4.70	.699656	7.07	13	.540079	4.58	.725032	7.03
.523618	4.70	.700080	7.05	14	.540354	4.60	.725454	7.05
9.523900	4.70	9.700503	7.07	15	9.540630	4.60	9.725877	7.03
.524182	4.70	.700927	7.05	16	.540906	4.58	.726299	7.03
.524464	4.70	.701350	7.07	17	.541181	4.58	.726721	7.03
.524746	4.70	.701774	7.07	18	.541456	4.60	.727143	7.03
.525028	4.68	.702198	7.05	19	.541732	4.58	.727565	7.05
9.525309	4.70	9.702621	7.07	20	9.542007	4.58	9.727988	7.03
.525591	4.68	.703045	7.05	21	.542282	4.58	.728410	7.03
.525872	4.68	.703468	7.05	22	.542557	4.58	.728832	7.03
.526153	4.70	.703891	7.07	23	.542832	4.57	.729254	7.03
.526435	4.68	.704315	7.05	24	.543106	4.58	.729676	7.03
9.526716	4.68	9.704738	7.07	25	9.543381	4.57	9.730098	7.03
.526997	4.67	.705162	7.05	26	.543655	4.58	.730520	7.03
.527277	4.68	.705585	7.05	27	.543930	4.57	.730942	7.03
.527558	4.68	.706008	7.05	28	.544204	4.57	.731364	7.03
.527839	4.67	.706431	7.07	29	.544478	4.57	.731786	7.03
9.528119	4.68	9.706855	7.05	30	9.544752	4.57	9.732208	7.03
.528400	4.67	.707278	7.05	31	.545026	4.57	.732630	7.03
.528680	4.67	.707701	7.05	32	.545300	4.57	.733052	7.03
.528960	4.67	.708124	7.05	33	.545574	4.57	.733474	7.03
.529240	4.67	.708547	7.07	34	.545848	4.55	.733896	7.02
9.529520	4.67	9.708971	7.05	35	9.546121	4.57	9.734317	7.03
.529800	4.67	.709394	7.05	36	.546395	4.55	.734739	7.03
.530080	4.65	.709817	7.05	37	.546668	4.55	.735161	7.03
.530359	4.67	.710240	7.05	38	.546941	4.55	.735583	7.03
.530639	4.65	.710663	7.05	39	.547214	4.55	.736005	7.03
9.530918	4.67	9.711086	7.05	40	9.547487	4.55	9.736427	7.02
.531198	4.65	.711509	7.05	41	.547760	4.55	.736848	7.03
.531477	4.65	.711932	7.05	42	.548033	4.55	.737270	7.03
.531756	4.65	.712355	7.05	43	.548306	4.55	.737692	7.03
.532035	4.65	.712778	7.03	44	.548579	4.53	.738114	7.02
9.532314	4.63	9.713200	7.05	45	9.548851	4.55	9.738535	7.03
.532592	4.65	.713623	7.05	46	.549124	4.53	.738957	7.03
.532871	4.65	.714046	7.05	47	.549396	4.53	.739379	7.02
.533150	4.63	.714469	7.05	48	.549668	4.53	.739800	7.03
.533428	4.63	.714892	7.05	49	.549940	4.53	.740222	7.03
9.533706	4.65	9.715315	7.03	50	9.550212	4.53	9.740644	7.02
.533985	4.63	.715737	7.05	51	.550484	4.53	.741065	7.03
.534263	4.63	.716160	7.05	52	.550756	4.53	.741487	7.02
.534541	4.63	.716583	7.03	53	.551028	4.52	.741908	7.03
.534819	4.63	.717005	7.05	54	.551299	4.53	.742330	7.02
9.535097	4.62	9.717428	7.05	55	9.551571	4.52	9.742751	7.03
.535374	4.63	.717851	7.03	56	.551842	4.52	.743173	7.03
.535652	4.62	.718273	7.05	57	.552113	4.52	.743595	7.02
.535929	4.63	.718696	7.03	58	.552384	4.53	.744016	7.03
.536207	4.62	.719118	7.05	59	.552656	4.52	.744438	7.02
9.536484		9.719541		60	9.552927		9.744859	

TABLE 57. — *Continued*

LOGARITHMIC VERSED SINES AND EXTERNAL SECANTS

50°					51°				
M.	Vers.	D. 1″.	Exsec.	D. 1″.	M.	Vers.	D. 1″.	Exsec.	D. 1″.
0	9.552927	4.50	9.744859	7.02	0	9.568999	4.42	9.770127	7.02
1	.553197	4.52	.745280	7.03	1	.569264	4.40	.770548	7.02
2	.553468	4.52	.745702	7.02	2	.569528	4.42	.770969	7.00
3	.553739	4.50	.746123	7.03	3	.569793	4.40	.771389	7.02
4	.554009	4.52	.746545	7.02	4	.570057	4.42	.771810	7.02
5	9.554280	4.50	9.746966	7.03	5	9.570322	4.40	9.772231	7.02
6	.554550	4.50	.747388	7.02	6	.570586	4.40	.772652	7.02
7	.554820	4.52	.747809	7.02	7	.570850	4.40	.773073	7.02
8	.555091	4.50	.748230	7.03	8	.571114	4.40	.773494	7.00
9	.555361	4.50	.748652	7.02	9	.571378	4.40	.773914	7.02
10	9.555631	4.48	9.749073	7.02	10	9.571642	4.40	9.774335	7.02
11	.555900	4.50	.749494	7.03	11	.571906	4.40	.774756	7.02
12	.556170	4.50	.749916	7.02	12	.572170	4.40	.775177	7.02
13	.556440	4.48	.750337	7.02	13	.572434	4.38	.775598	7.00
14	.556709	4.50	.750758	7.03	14	.572697	4.38	.776018	7.02
15	9.556979	4.48	9.751180	7.02	15	9.572960	4.40	9.776439	7.02
16	.557248	4.48	.751601	7.02	16	.573224	4.38	.776860	7.02
17	.557517	4.48	.752022	7.02	17	.573487	4.38	.777281	7.02
18	.557786	4.48	.752443	7.03	18	.573750	4.38	.777702	7.00
19	.558055	4.48	.752865	7.02	19	.574013	4.38	.778122	7.02
20	9.558324	4.48	9.753286	7.02	20	9.574276	4.38	9.778543	7.02
21	.558593	4.48	.753707	7.02	21	.574539	4.38	.778964	7.02
22	.558862	4.48	.754128	7.02	22	.574802	4.37	.779385	7.00
23	.559131	4.47	.754549	7.03	23	.575064	4.38	.779805	7.02
24	.559399	4.47	.754971	7.02	24	.575327	4.37	.780226	7.02
25	9.559667	4.48	9.755392	7.02	25	9.575589	4.38	9.780647	7.02
26	.559936	4.47	.755813	7.02	26	.575852	4.37	.781068	7.00
27	.560204	4.47	.756234	7.02	27	.576114	4.37	.781488	7.02
28	.560472	4.47	.756655	7.02	28	.576376	4.37	.781909	7.02
29	.560740	4.47	.757076	7.03	29	.576638	4.37	.782330	7.02
30	9.561008	4.47	9.757498	7.02	30	9.576900	4.37	9.782751	7.00
31	.561276	4.47	.757919	7.02	31	.577162	4.37	.783171	7.02
32	.561544	4.45	.758340	7.02	32	.577424	4.35	.783592	7.02
33	.561811	4.47	.758761	7.02	33	.577685	4.37	.784013	7.00
34	.562079	4.45	.759182	7.02	34	.577947	4.35	.784433	7.02
35	9.562346	4.45	9.759603	7.02	35	9.578208	4.37	9.784854	7.02
36	.562613	4.47	.760024	7.02	36	.578470	4.35	.785275	7.02
37	.562881	4.45	.760445	7.02	37	.578731	4.35	.785696	7.00
38	.563148	4.45	.760866	7.02	38	.578992	4.35	.786116	7.02
39	.563415	4.45	.761287	7.02	39	.579253	4.35	.786537	7.02
40	9.563682	4.43	9.761708	7.02	40	9.579514	4.35	9.786958	7.00
41	.563948	4.45	.762129	7.02	41	.579775	4.35	.787378	7.02
42	.564215	4.45	.762550	7.02	42	.580036	4.35	.787799	7.02
43	.564482	4.43	.762971	7.02	43	.580297	4.33	.788220	7.02
44	.564748	4.45	.763392	7.02	44	.580557	4.35	.788641	7.00
45	9.565015	4.43	9.763813	7.02	45	9.580818	4.33	9.789061	7.02
46	.565281	4.43	.764234	7.02	46	.581078	4.35	.789482	7.02
47	.565547	4.43	.764655	7.02	47	.581339	4.33	.789903	7.00
48	.565813	4.43	.765076	7.02	48	.581599	4.33	.790323	7.02
49	.566079	4.43	.765497	7.02	49	.581859	4.33	.790744	7.02
50	9.566345	4.43	9.765918	7.02	50	9.582119	4.33	9.791165	7.02
51	.566611	4.43	.766339	7.02	51	.582379	4.33	.791586	7.00
52	.566877	4.42	.766760	7.02	52	.582639	4.32	.792006	7.02
53	.567142	4.43	.767181	7.02	53	.582898	4.33	.792427	7.02
54	.567408	4.42	.767602	7.00	54	.583158	4.33	.792848	7.00
55	9.567673	4.42	9.768022	7.02	55	9.583418	4.32	9.793268	7.02
56	.567938	4.43	.768443	7.02	56	.583677	4.32	.793689	7.02
57	.568204	4.42	.768864	7.02	57	.583936	4.33	.794110	7.02
58	.568469	4.42	.769285	7.02	58	.584196	4.32	.794531	7.00
59	.568734	4.42	.769706	7.02	59	.584455	4.32	.794951	7.02
60	9.568999		9.770127		60	9.584714		9.795372	

TABLE 57. — *Continued*

LOGARITHMIC VERSED SINES AND EXTERNAL SECANTS

52°					53°				
M.	Vers.	D. 1″.	Exsec.	D. 1″.	M.	Vers.	D. 1″.	Exsec.	D. 1″.
0	9.584714	4.32	9.795372	7.02	0	9.600085	4.22	9.820622	7.02
1	.584973	4.32	.795793	7.00	1	.600338	4.22	.821043	7.02
2	.585232	4.32	.796213	7.02	2	.600591	4.23	.821464	7.02
3	.585491	4.30	.796634	7.02	3	.600845	4.22	.821885	7.02
4	.585749	4.32	.797055	7.02	4	.601098	4.22	.822306	7.02
5	9.586008	4.30	9.797476	7.00	5	9.601351	4.20	9.822727	7.02
6	.586266	4.32	.797896	7.02	6	.601603	4.22	.823148	7.02
7	.586525	4.30	.798317	7.02	7	.601856	4.22	.823569	7.02
8	.586783	4.30	.798738	7.00	8	.602109	4.22	.823990	7.02
9	.587041	4.30	.799158	7.02	9	.602362	4.20	.824411	7.03
10	9.587299	4.30	9.799579	7.02	10	9.602614	4.20	9.824833	7.02
11	.587557	4.30	.800000	7.02	11	.602866	4.22	.825254	7.02
12	.587815	4.30	.800421	7.00	12	.603119	4.20	.825675	7.02
13	.588073	4.30	.800841	7.02	13	.603371	4.20	.826096	7.02
14	.588331	4.28	.801262	7.02	14	.603623	4.20	.826517	7.02
15	9.588588	4.30	9.801683	7.02	15	9.603875	4.20	9.826938	7.03
16	.588846	4.28	.802104	7.00	16	.604127	4.20	.827360	7.02
17	.589103	4.30	.802524	7.02	17	.604379	4.20	.827781	7.02
18	.589361	4.28	.802945	7.02	18	.604631	4.20	.828202	7.02
19	.589618	4.28	.803366	7.02	19	.604883	4.18	.828623	7.02
20	9.589875	4.28	9.803787	7.00	20	9.605134	4.20	9.829044	7.03
21	.590132	4.28	.804207	7.02	21	.605386	4.18	.829466	7.02
22	.590389	4.28	.804628	7.02	22	.605637	4.18	.829887	7.02
23	.590646	4.28	.805049	7.02	23	.605888	4.20	.830308	7.02
24	.590903	4.28	.805470	7.02	24	.606140	4.18	.830729	7.03
25	9.591160	4.27	9.805891	7.00	25	9.606391	4.18	9.831151	7.02
26	.591416	4.28	.806311	7.02	26	.606642	4.18	.831572	7.02
27	.591673	4.27	.806732	7.02	27	.606893	4.18	.831993	7.03
28	.591929	4.27	.807153	7.02	28	.607144	4.17	.832415	7.02
29	.592185	4.28	.807574	7.02	29	.607394	4.18	.832836	7.02
30	9.592442	4.27	9.807995	7.00	30	9.607645	4.18	9.833257	7.03
31	.592698	4.27	.808415	7.02	31	.607896	4.17	.833679	7.02
32	.592954	4.27	.808836	7.02	32	.608146	4.18	.834100	7.03
33	.593210	4.27	.809257	7.02	33	.608397	4.17	.834522	7.02
34	.593466	4.25	.809678	7.02	34	.608647	4.17	.834943	7.02
35	9.593721	4.27	9.810099	7.02	35	9.608897	4.17	9.835364	7.03
36	.593977	4.27	.810520	7.00	36	.609147	4.17	.835786	7.02
37	.594233	4.25	.810940	7.02	37	.609397	4.17	.836207	7.03
38	.594488	4.25	.811361	7.02	38	.609647	4.17	.836629	7.02
39	.594743	4.27	.811782	7.02	39	.609897	4.17	.837050	7.03
40	9.594999	4.25	9.812203	7.02	40	9.610147	4.17	9.837472	7.02
41	.595254	4.25	.812624	7.02	41	.610397	4.15	.837893	7.03
42	.595509	4.25	.813045	7.02	42	.610646	4.17	.838315	7.02
43	.595764	4.25	.813466	7.00	43	.610896	4.15	.838736	7.03
44	.596019	4.25	.813886	7.02	44	.611145	4.15	.839158	7.02
45	9.596274	4.23	9.814307	7.02	45	9.611394	4.17	9.839579	7.03
46	.596528	4.25	.814728	7.02	46	.611644	4.15	.840001	7.03
47	.596783	4.25	.815149	7.02	47	.611893	4.15	.840423	7.02
48	.597038	4.23	.815570	7.02	48	.612142	4.15	.840844	7.03
49	.597292	4.23	.815991	7.02	49	.612391	4.15	.841266	7.02
50	9.597546	4.25	9.816412	7.02	50	9.612640	4.13	9.841687	7.03
51	.597801	4.23	.816833	7.02	51	.612888	4.15	.842109	7.03
52	.598055	4.23	.817254	7.02	52	.613137	4.15	.842531	7.03
53	.598309	4.23	.817675	7.02	53	.613386	4.13	.842953	7.02
54	.598563	4.23	.818096	7.02	54	.613634	4.15	.843374	7.03
55	9.598817	4.23	9.818517	7.02	55	9.613883	4.13	9.843796	7.03
56	.599071	4.22	.818938	7.02	56	.614131	4.13	.844218	7.02
57	.599324	4.23	.819359	7.02	57	.614379	4.13	.844639	7.03
58	.599578	4.22	.819780	7.02	58	.614627	4.15	.845061	7.03
59	.599831	4.23	.820201	7.02	59	.614876	4.13	.845483	7.03
60	9.600085		9.820622		60	9.615124		9.845905	

TABLE 57.—*Continued*

LOGARITHMIC VERSED SINES AND EXTERNAL SECANTS

54°					55°				
M.	Vers.	D. 1″.	Exsec.	D. 1″.	M.	Vers.	D. 1″.	Exsec.	D. 1″.
0	9.615124	4.12	9.845905	7.03	0	9.629841	4.05	9.871250	7.05
1	.615371	4.13	.846327	7.03	1	.630084	4.03	.871673	7.05
2	.615619	4.13	.846749	7.02	2	.630326	4.05	.872096	7.05
3	.615867	4.13	.847170	7.03	3	.630569	4.03	.872519	7.05
4	.616115	4.12	.847592	7.03	4	.630811	4.05	.872942	7.07
5	9.616362	4.13	9.848014	7.03	5	9.631054	4.03	9.873366	7.05
6	.616610	4.12	.848436	7.03	6	.631296	4.03	.873789	7.05
7	.616857	4.12	.848858	7.03	7	.631538	4.03	.874212	7.07
8	.617104	4.12	.849280	7.03	8	.631780	4.03	.874636	7.05
9	.617351	4.12	.849702	7.03	9	.632022	4.03	.875059	7.05
10	9.617598	4.12	9.850124	7.03	10	9.632264	4.02	9.875482	7.07
11	.617845	4.12	.850546	7.03	11	.632505	4.03	.875906	7.05
12	.618092	4.12	.850968	7.03	12	.632747	4.03	.876329	7.05
13	.618339	4.12	.851390	7.03	13	.632989	4.02	.876752	7.07
14	.618586	4.12	.851812	7.03	14	.633230	4.03	.877176	7.05
15	9.618833	4.10	9.852234	7.03	15	9.633472	4.02	9.877599	7.07
16	.619079	4.12	.852656	7.03	16	.633713	4.02	.878023	7.05
17	.619326	4.10	.853078	7.03	17	.633954	4.03	.878446	7.07
18	.619572	4.10	.853500	7.05	18	.634196	4.02	.878870	7.07
19	.619818	4.12	.853923	7.03	19	.634437	4.02	.879294	7.05
20	9.620065	4.10	9.854345	7.03	20	9.634678	4.02	9.879717	7.07
21	.620311	4.10	.854767	7.03	21	.634919	4.00	.880141	7.07
22	.620557	4.10	.855189	7.05	22	.635159	4.02	.880565	7.05
23	.620803	4.08	.855612	7.03	23	.635400	4.02	.880988	7.07
24	.621048	4.10	.856034	7.03	24	.635641	4.00	.881412	7.07
25	9.621294	4.10	9.856456	7.03	25	9.635881	4.02	9.881836	7.07
26	.621540	4.10	.856878	7.05	26	.636122	4.00	.882260	7.05
27	.621786	4.08	.857301	7.03	27	.636362	4.02	.882683	7.07
28	.622031	4.08	.857723	7.03	28	.636603	4.00	.883107	7.07
29	.622276	4.10	.858145	7.05	29	.636843	4.00	.883531	7.07
30	9.622522	4.08	9.858568	7.03	30	9.637083	4.00	9.883955	7.07
31	.622767	4.08	.858990	7.05	31	.637323	4.00	.884379	7.07
32	.623012	4.08	.859413	7.03	32	.637563	4.00	.884803	7.07
33	.623257	4.08	.859835	7.05	33	.637803	4.00	.885227	7.07
34	.623502	4.08	.860258	7.03	34	.638043	4.00	.885651	7.07
35	9.623747	4.08	9.860680	7.05	35	9.638283	3.98	9.886075	7.07
36	.623992	4.08	.861103	7.03	36	.638522	4.00	.886499	7.07
37	.624237	4.07	.861525	7.05	37	.638762	3.98	.886923	7.07
38	.624481	4.08	.861948	7.03	38	.639001	4.00	.887347	7.08
39	.624726	4.07	.862370	7.05	39	.639241	3.98	.887772	7.07
40	9.624970	4.08	9.862793	7.03	40	9.639480	3.98	9.888196	7.07
41	.625215	4.07	.863215	7.05	41	.639719	3.98	.888620	7.07
42	.625459	4.07	.863638	7.05	42	.639958	3.98	.889044	7.08
43	.625703	4.07	.864061	7.03	43	.640197	3.98	.889469	7.07
44	.625947	4.07	.864483	7.05	44	.640436	3.98	.889893	7.07
45	9.626191	4.07	9.864906	7.05	45	9.640675	3.98	9.890317	7.08
46	.626435	4.07	.865329	7.05	46	.640914	3.98	.890742	7.07
47	.626679	4.07	.865752	7.03	47	.641153	3.97	.891166	7.08
48	.626923	4.05	.866174	7.05	48	.641391	3.98	.891591	7.07
49	.627166	4.07	.866597	7.05	49	.641630	3.97	.892015	7.08
50	9.627410	4.07	9.867020	7.05	50	9.641868	3.98	9.892440	7.07
51	.627654	4.05	.867443	7.05	51	.642107	3.97	.892864	7.08
52	.627897	4.05	.867866	7.05	52	.642345	3.97	.893289	7.08
53	.628140	4.07	.868289	7.05	53	.642583	3.98	.893714	7.07
54	.628384	4.05	.868712	7.05	54	.642822	3.97	.894138	7.08
55	9.628627	4.05	9.869135	7.05	55	9.643060	3.97	9.894563	7.08
56	.628870	4.05	.869558	7.05	56	.643298	3.95	.894988	7.07
57	.629113	4.05	.869981	7.05	57	.643535	3.97	.895412	7.08
58	.629356	4.03	.870404	7.05	58	.643773	3.97	.895837	7.08
59	.629598	4.05	.870827	7.05	59	.644011	3.97	.896262	7.08
60	9.629841		9.871250		60	9.644249		9.896687	

TABLE 57.—*Continued*

LOGARITHMIC VERSED SINES AND EXTERNAL SECANTS

56°					57°				
M.	Vers.	D. 1″.	Exsec.	D. 1″.	M.	Vers.	D. 1″.	Exsec.	D. 1″.
0	9.644249	3.95	9.896687	7.08	0	9.658356	3.87	9.922247	7.12
1	.644486	3.97	.897112	7.08	1	.658588	3.88	.922674	7.13
2	.644724	3.95	897537	7.08	2	.658821	3.87	.923102	7.12
3	.644961	3.95	.897962	7.08	3	.659053	3.88	.923529	7.12
4	.645198	3.97	.898387	7.08	4	.659286	3.87	.923956	7.13
5	9.645436	3.95	9.898812	7.08	5	9.659518	3.87	9.924384	7.12
6	.645673	3.95	.899237	7.08	6	.659750	3.88	.924811	7.13
7	.645910	3.95	.899662	7.08	7	.659983	3.87	.925239	7.12
8	.646147	3.95	.900087	7.08	8	.660215	3.87	.925666	7.13
9	.646384	3.93	.900512	7.10	9	.660447	3.87	.926094	7.12
10	9.646620	3.95	9.900938	7.08	10	9.660679	3.85	9.926521	7.13
11	.646857	3.95	.901363	7.08	11	.660910	3.87	.926949	7.13
12	.647094	3.93	.901788	7.08	12	.661142	3.87	.927377	7.12
13	.647330	3.95	.902213	7.10	13	.661374	3.85	.927804	7.13
14	.647567	3.93	.902639	7.08	14	.661605	3.87	.928232	7.13
15	9.647803	3.93	9.903064	7.10	15	9.661837	3.85	9.928660	7.13
16	.648039	3.95	.903490	7.08	16	.662068	3.87	.929088	7.13
17	.648276	3.93	.903915	7.10	17	.662300	3.85	.929516	7.13
18	.648512	3.93	.904341	7.08	18	.662531	3.85	.929944	7.13
19	.648748	3.93	.904766	7.10	19	.662762	3.85	.930372	7.13
20	9.648984	3.93	9.905192	7.08	20	9.662993	3.85	9.930800	7.13
21	.649220	3.93	.905617	7.10	21	.663224	3.85	.931228	7.13
22	.649456	3.92	.906043	7.10	22	.663455	3.85	.931656	7.15
23	.649691	3.93	.906469	7.08	23	.663686	3.85	.932085	7.13
24	.649927	3.93	.906894	7.10	24	.663917	3.85	.932513	7.13
25	9.650163	3.92	9.907320	7.10	25	9.664148	3.83	9.932941	7.13
26	.650398	3.92	.907746	7.10	26	.664378	3.85	.933369	7.15
27	.650633	3.93	.908172	7.10	27	.664609	3.83	.933798	7.13
28	.650869	3.92	.908598	7.10	28	.664839	3.85	.934226	7.15
29	.651104	3.92	.909024	7.10	29	.665070	3.83	.934655	7.13
30	9.651339	3.92	9.909450	7.10	30	9.665300	3.83	9.935083	7.15
31	.651574	3.92	.909876	7.10	31	.665530	3.83	.935512	7.15
32	.651809	3.92	.910302	7.10	32	.665760	3.83	.935941	7.13
33	.652044	3.92	.910728	7.10	33	.665990	3.83	.936369	7.15
34	.652279	3.92	.911154	7.10	34	.666220	3.83	.936798	7.15
35	9.652514	3.90	9.911580	7.10	35	9.666450	3.83	9.937227	7.15
36	.652748	3.92	.912006	7.10	36	.666680	3.83	.937656	7.15
37	.652983	3.90	.912432	7.12	37	.666910	3.82	.938085	7.13
38	.653217	3.92	.912859	7.10	38	.667139	3.83	.938513	7.15
39	.653452	3.90	.913285	7.10	39	.667369	3.83	.938942	7.15
40	9.653686	3.90	9.913711	7.12	40	9.667599	3.82	9.939371	7.17
41	.653920	3.92	.914138	7.10	41	.667828	3.82	.939801	7.15
42	.654155	3.90	.914564	7.12	42	.668057	3.83	.940230	7.15
43	.654389	3.90	.914991	7.10	43	.668287	3.82	.940659	7.15
44	.654623	3.90	.915417	7.12	44	.668516	3.82	.941088	7.15
45	9.654857	3.88	9.915844	7.10	45	9.668745	3.82	9.941517	7.17
46	.655090	3.90	.916270	7.12	46	.668974	3.82	.941947	7.15
47	.655324	3.90	.916697	7.12	47	.669203	3.82	.942376	7.17
48	.655558	3.90	.917124	7.10	48	.669432	3.82	.942806	7.15
49	.655792	3.88	.917550	7.12	49	.669661	3.80	.943235	7.17
50	9.656025	3.88	9.917977	7.12	50	9.669889	3.82	9.943665	7.15
51	.656258	3.90	.918404	7.12	51	.670118	3.82	.944094	7.17
52	.656492	3.88	.918831	7.12	52	.670347	3.80	.944524	7.15
53	.656725	3.88	.919258	7.12	53	.670575	3.82	.944953	7.17
54	.656958	3.88	.919685	7.12	54	.670804	3.80	.945383	7.17
55	9.657191	3.88	9.920112	7.12	55	9.671032	3.80	9.945813	7.17
56	.657424	3.88	.920539	7.12	56	.671260	3.80	.946243	7.17
57	.657657	3.88	.920966	7.12	57	.671488	3.80	.946673	7.17
58	.657890	3.88	.921393	7.12	58	.671716	3.82	.947103	7.17
59	.658123	3.88	.921820	7.12	59	.671945	3.78	.947533	7.17
60	9.658356		9.922247		60	9.672172		9.947963	

TABLE 57.—*Continued*

LOGARITHMIC VERSED SINES AND EXTERNAL SECANTS

58°					59°				
M.	Vers.	D. 1″.	Exsec.	D. 1″.	M.	Vers.	D. 1″.	Exsec.	D. 1″.
0	9.672172	3.80	9.947963	7.17	0	9.685708	3.72	9.973868	7.23
1	.672400	3.80	.948393	7.17	1	.685931	3.72	.974302	7.23
2	.672628	3.80	.948823	7.17	2	.686154	3.72	.974736	7.22
3	.672856	3.78	.949253	7.17	3	.686377	3.72	.975169	7.23
4	.673083	3.80	.949683	7.18	4	.686600	3.72	.975603	7.23
5	9.673311	3.78	9.950114	7.17	5	9.686823	3.72	9.976037	7.23
6	.673538	3.80	.950544	7.18	6	.687046	3.72	.976471	7.23
7	.673766	3.78	.950975	7.17	7	.687269	3.72	.976905	7.23
8	.673993	3.78	.951405	7.18	8	.687492	3.70	.977339	7.23
9	.674220	3.80	.951836	7.17	9	.687714	3.72	.977773	7.23
10	9.674448	3.78	9.952266	7.18	10	9.687937	3.70	9.978207	7.23
11	.674675	3.78	.952697	7.18	11	.688159	3.72	.978641	7.23
12	.674902	3.78	.953128	7.17	12	.688382	3.70	.979075	7.25
13	.675129	3.78	.953558	7.18	13	.688604	3.70	.979510	7.23
14	.675356	3.77	.953989	7.18	14	.688826	3.70	.979944	7.25
15	9.675582	3.78	9.954420	7.18	15	9.689048	3.72	9.980379	7.23
16	.675809	3.78	.954851	7.18	16	.689271	3.70	.980813	7.25
17	.676036	3.77	.955282	7.18	17	.689493	3.70	.981248	7.23
18	.676262	3.78	.955713	7.18	18	.689715	3.70	.981682	7.25
19	.676489	3.77	.956144	7.18	19	.689937	3.68	.982117	7.25
20	9.676715	3.77	9.956575	7.18	20	9.690158	3.70	9.982552	7.25
21	.676941	3.78	.957006	7.20	21	.690380	3.70	.982987	7.25
22	.677168	3.77	.957438	7.18	22	.690602	3.68	.983422	7.25
23	.677394	3.77	.957869	7.18	23	.690823	3.70	.983857	7.25
24	.677620	3.77	.958300	7.20	24	.691045	3.68	.984292	7.25
25	9.677846	3.77	9.958732	7.18	25	9.691266	3.70	9.984727	7.25
26	.678072	3.77	.959163	7.20	26	.691488	3.68	.985162	7.25
27	.678298	3.75	.959595	7.18	27	.691709	3.68	.985597	7.27
28	.678523	3.77	.960026	7.20	28	.691930	3.68	.986033	7.25
29	.678749	3.77	.960458	7.20	29	.692151	3.68	.986468	7.27
30	9.678975	3.75	9.960890	7.18	30	9.692372	3.68	9.986904	7.25
31	.679200	3.77	.961321	7.20	31	.692593	3.68	.987339	7.27
32	.679426	3.75	.961753	7.20	32	.692814	3.68	.987775	7.25
33	.679651	3.75	.962185	7.20	33	.693035	3.68	.988210	7.27
34	.679876	3.77	.962617	7.20	34	.693256	3.68	.988646	7.27
35	9.680102	3.75	9.963049	7.20	35	9.693477	3.67	9.989082	7.27
36	.680327	3.75	.963481	7.20	36	.693697	3.68	.989518	7.27
37	.680552	3.75	.963913	7.20	37	.693918	3.67	.989954	7.27
38	.680777	3.75	.964345	7.22	38	.694138	3.68	.990390	7.27
39	.681002	3.75	.964778	7.20	39	.694359	3.67	.990826	7.27
40	9.681227	3.73	9.965210	7.20	40	9.694579	3.67	9.991262	7.27
41	.681451	3.75	.965642	7.22	41	.694799	3.67	.991698	7.27
42	.681676	3.75	.966075	7.20	42	.695019	3.68	.992134	7.28
43	.681901	3.73	.966507	7.22	43	.695240	3.67	.992571	7.27
44	.682125	3.75	.966940	7.20	44	.695460	3.67	.993007	7.28
45	9.682350	3.73	9.967372	7.22	45	9.695680	3.65	9.993444	7.27
46	.682574	3.73	.967805	7.22	46	.695899	3.67	.993880	7.28
47	.682798	3.75	.968238	7.20	47	.696119	3.67	.994317	7.28
48	.683023	3.73	.968670	7.22	48	.696339	3.67	.994754	7.28
49	.683247	3.73	.969103	7.22	49	.696559	3.65	.995191	7.27
50	9.683471	3.73	9.969536	7.22	50	9.696778	3.67	9.995627	7.28
51	.683695	3.73	.969969	7.22	51	.696998	3.65	.996064	7.28
52	.683919	3.73	.970402	7.22	52	.697217	3.67	.996501	7.28
53	.684143	3.73	.970835	7.22	53	.697437	3.65	.996938	7.30
54	.684367	3.72	.971268	7.22	54	.697656	3.65	.997376	7.28
55	9.684590	3.73	9.971701	7.23	55	9.697875	3.65	9.997813	7.28
56	.684814	3.72	.972135	7.22	56	.698094	3.65	.998250	7.28
57	.685037	3.73	.972568	7.22	57	.698313	3.65	.998687	7.30
58	.685261	3.72	.973001	7.23	58	.698532	3.65	.999125	7.28
59	.685484	3.73	.973435	7.22	59	.698751	3.65	.999562	7.30
60	9.685708		9.973868		60	9.698970		0.000000	

TABLE 57. — *Continued*

LOGARITHMIC VERSED SINES AND EXTERNAL SECANTS

60°					61°				
M.	Vers.	D. 1″.	Exsec.	D. 1″.	M.	Vers.	D. 1″.	Exsec.	D. 1″.
0	9.698970	3.65	0.000000	7.30	0	9.711968	3.57	0.026397	7.37
1	.699189	3.63	.000438	7.28	1	.712182	3.58	.026839	7.37
2	.699407	3.65	.000875	7.30	2	.712397	3.57	.027281	7.38
3	.699626	3.65	.001313	7.30	3	.712611	3.57	.027724	7.38
4	.699845	3.63	.001751	7.30	4	.712825	3.57	.028167	7.37
5	9.700063	3.65	0.002189	7.30	5	9.713039	3.57	0.028609	7.38
6	.700282	3.63	.002627	7.30	6	.713253	3.57	.029052	7.38
7	.700500	3.63	.003065	7.30	7	.713467	3.57	.029495	7.38
8	.700718	3.63	.003503	7.32	8	.713681	3.57	.029938	7.38
9	.700936	3.63	.003942	7.30	9	.713895	3.57	.030381	7.40
10	9.701154	3.63	0.004380	7.30	10	9.714109	3.57	0.030825	7.38
11	.701372	3.63	.004818	7.32	11	.714323	3.55	.031268	7.38
12	.701590	3.63	.005257	7.30	12	.714536	3.57	.031711	7.40
13	.701808	3.63	.005695	7.32	13	.714750	3.55	.032155	7.38
14	.702026	3.63	.006134	7.32	14	.714963	3.57	.032598	7.40
15	9.702244	3.63	0.006573	7.32	15	9.715177	3.55	0.033042	7.40
16	.702462	3.62	.007012	7.30	16	.715390	3.55	.033486	7.38
17	.702679	3.63	.007450	7.32	17	.715603	3.57	.033929	7.40
18	.702897	3.62	.007889	7.32	18	.715817	3.55	.034373	7.40
19	.703114	3.63	.008328	7.32	19	.716030	3.55	.034817	7.40
20	9.703332	3.62	0.008767	7.33	20	9.716243	3.55	0.035261	7.40
21	.703549	3.62	.009207	7.32	21	.716456	3.55	.035705	7.42
22	.703766	3.62	.009646	7.32	22	.716669	3.55	.036150	7.40
23	.703983	3.62	.010085	7.33	23	.716882	3.55	.036594	7.40
24	.704200	3.62	.010525	7.32	24	.717095	3.53	.037038	7.42
25	9.704417	3.62	0.010964	7.33	25	9.717307	3.55	0.037483	7.42
26	.704634	3.62	.011404	7.32	26	.717520	3.53	.037928	7.40
27	.704851	3.62	.011843	7.33	27	.717732	3.55	.038372	7.42
28	.705068	3.62	.012283	7.33	28	.717945	3.53	.038817	7.42
29	.705285	3.60	.012723	7.33	29	.718157	3.55	.039262	7.42
30	9.705501	3.62	0.013163	7.33	30	9.718370	3.53	0.039707	7.42
31	.705718	3.62	.013603	7.33	31	.718582	3.53	.040152	7.42
32	.705935	3.60	.014043	7.33	32	.718794	3.55	.040597	7.42
33	.706151	3.60	.014483	7.33	33	.719007	3.53	.041042	7.43
34	.706367	3.62	.014923	7.33	34	.719219	3.53	.041488	7.42
35	9.706584	3.60	0.015363	7.35	35	9.719431	3.53	0.041933	7.43
36	.706800	3.60	.015804	7.33	36	.719643	3.53	.042379	7.42
37	.707016	3.60	.016244	7.33	37	.719855	3.52	.042824	7.43
38	.707232	3.60	.016684	7.35	38	.720066	3.53	.043270	7.43
39	.707448	3.60	.017125	7.35	39	.720278	3.53	.043716	7.43
40	9.707664	3.60	0.017566	7.35	40	9.720490	3.52	0.044162	7.43
41	.707880	3.60	.018007	7.33	41	.720701	3.53	.044608	7.43
42	.708096	3.58	.018447	7.35	42	.720913	3.52	.045054	7.43
43	.708311	3.60	.018888	7.35	43	.721124	3.53	.045500	7.43
44	.708527	3.60	.019329	7.35	44	.721336	3.52	.045946	7.45
45	9.708743	3.58	0.019770	7.37	45	9.721547	3.52	0.046393	7.43
46	.708958	3.60	.020212	7.35	46	.721758	3.53	.046839	7.45
47	.709174	3.58	.020653	7.35	47	.721970	3.52	.047286	7.43
48	.709389	3.58	.021094	7.35	48	.722181	3.52	.047732	7.45
49	.709604	3.58	.021535	7.37	49	.722392	3.52	.048179	7.45
50	9.709819	3.60	0.021977	7.37	50	9.722603	3.52	0.048626	7.45
51	.710035	3.58	.022419	7.35	51	.722814	3.50	.049073	7.45
52	.710250	3.58	.022860	7.37	52	.723024	3.52	.049520	7.45
53	.710465	3.58	.023302	7.37	53	.723235	3.52	.049967	7.45
54	.710680	3.58	.023744	7.37	54	.723446	3.52	.050414	7.45
55	9.710895	3.57	0.024186	7.37	55	9.723657	3.50	0.050861	7.47
56	.711109	3.58	.024628	7.37	56	.723867	3.52	.051309	7.45
57	.711324	3.58	.025070	7.37	57	.724078	3.50	.051756	7.47
58	.711539	3.57	.025512	7.37	58	.724288	3.50	.052204	7.47
59	.711753	3.58	.025954	7.38	59	.724498	3.52	.052652	7.4
60	9.711968		0.026397		60	9.724709		0.053099	

TABLE 57.—*Continued*

LOGARITHMIC VERSED SINES AND EXTERNAL SECANTS

62°					63°				
M.	Vers.	D. 1″.	Exsec.	D. 1″.	M.	Vers.	D. 1″.	Exsec.	D. 1″.
0	9.724709	3.50	0.053099	7.47	0	9.737200	3.43	0.080153	7.58
1	.724919	3.50	.053547	7.47	1	.737406	3.43	.080608	7.57
2	.725129	3.50	.053995	7.47	2	.737612	3.43	.081062	7.57
3	.725339	3.50	.054443	7.48	3	.737818	3.43	.081516	7.58
4	.725549	3.50	.054892	7.47	4	.738024	3.43	.081971	7.57
5	9.725759	3.50	0.055340	7.47	5	9.738230	3.43	0.082425	7.58
6	.725969	3.50	.055788	7.48	6	.738436	3.43	.082880	7.58
7	.726179	3.48	.056237	7.47	7	.738642	3.42	.083335	7.58
8	.726388	3.50	.056685	7.48	8	.738847	3.43	.083790	7.58
9	.726598	3.50	.057134	7.48	9	.739053	3.42	.084245	7.58
10	9.726808	3.48	0.057583	7.48	10	9.739258	3.43	0.084700	7.58
11	.727017	3.50	.058032	7.48	11	.739464	3.42	.085155	7.60
12	.727227	3.48	.058481	7.48	12	.739669	3.43	.085611	7.58
13	.727436	3.48	.058930	7.48	13	.739875	3.42	.086066	7.60
14	.727645	3.50	.059379	7.48	14	.740080	3.42	.086522	7.58
15	9.727855	3.48	0.059828	7.50	15	9.740285	3.42	0.086977	7.60
16	.728064	3.48	.060278	7.48	16	.740490	3.42	.087433	7.60
17	.728273	3.48	.060727	7.50	17	.740695	3.42	.087889	7.60
18	.728482	3.48	.061177	7.48	18	.740900	3.42	.088345	7.60
19	.728691	3.48	.061626	7.50	19	.741105	3.42	.088801	7.62
20	9.728900	3.48	0.062076	7.50	20	9.741310	3.42	0.089258	7.60
21	.729109	3.47	.062526	7.50	21	.741515	3.40	.089714	7.62
22	.729317	3.48	.062976	7.50	22	.741719	3.42	.090171	7.60
23	.729526	3.48	.063426	7.50	23	.741924	3.42	.090627	7.62
24	.729735	3.47	.063876	7.52	24	.742129	3.40	.091084	7.62
25	9.729943	3.48	0.064327	7.50	25	9.742333	3.42	0.091541	7.62
26	.730152	3.47	.064777	7.50	26	.742538	3.40	.091998	7.62
27	.730360	3.48	.065227	7.52	27	.742742	3.40	.092455	7.62
28	.730569	3.47	.065678	7.52	28	.742946	3.40	.092912	7.63
29	.730777	3.47	.066129	7.52	29	.743150	3.42	.093370	7.62
30	9.730985	3.47	0.066580	7.50	30	9.743355	3.40	0.093827	7.63
31	.731193	3.47	.067030	7.53	31	.743559	3.40	.094285	7.63
32	.731401	3.47	.067482	7.52	32	.743763	3.40	.094743	7.62
33	.731609	3.47	.067933	7.52	33	.743967	3.40	.095200	7.63
34	.731817	3.47	.068384	7.52	34	.744171	3.40	.095658	7.63
35	9.732025	3.47	0.068835	7.53	35	9.744375	3.38	0.096116	7.65
36	.732233	3.47	.069287	7.52	36	.744578	3.40	.096575	7.63
37	.732441	3.45	.069738	7.53	37	.744782	3.40	.097033	7.63
38	.732648	3.47	.070190	7.53	38	.744986	3.38	.097491	7.65
39	.732856	3.47	.070642	7.52	39	.745189	3.40	.097950	7.63
40	9.733064	3.45	0.071093	7.53	40	9.745393	3.38	0.098408	7.65
41	.733271	3.45	.071545	7.55	41	.745596	3.40	.098867	7.65
42	.733478	3.47	.071998	7.53	42	.745800	3.38	.099326	7.65
43	.733686	3.45	.072450	7.53	43	.746003	3.38	.099785	7.65
44	.733893	3.45	.072902	7.53	44	.746206	3.38	.100244	7.67
45	9.734100	3.45	0.073354	7.55	45	9.746409	3.40	0.100704	7.65
46	.734307	3.47	.073807	7.55	46	.746613	3.38	.101163	7.67
47	.734515	3.43	.074260	7.53	47	.746816	3.38	.101623	7.65
48	.734721	3.45	.074712	7.55	48	.747019	3.38	.102082	7.67
49	.734928	3.45	.075165	7.55	49	.747222	3.37	.102542	7.67
50	9.735135	3.45	0.075618	7.55	50	9.747424	3.38	0.103002	7.67
51	.735342	3.45	.076071	7.55	51	.747627	3.38	.103462	7.67
52	.735549	3.43	.076524	7.55	52	.747830	3.38	.103922	7.67
53	.735755	3.45	.076977	7.57	53	.748033	3.37	.104382	7.68
54	.735962	3.45	.077431	7.55	54	.748235	3.38	.104843	7.67
55	9.736169	3.43	0.077884	7.57	55	9.748438	3.37	0.105303	7.68
56	.736375	3.43	.078338	7.57	56	.748640	3.38	.105764	7.67
57	.736581	3.45	.078792	7.55	57	.748843	3.37	.106224	7.68
58	.736788	3.43	.079245	7.57	58	.749045	3.37	.106685	7.68
59	.736994	3.43	.079699	7.57	59	.749247	3.37	.107146	7.68
60	9.737200		0.080153		60	9.749449		0.107607	

Table 57.—*Continued*

Logarithmic Versed Sines and External Secants

64°					65°				
M.	Vers.	D. 1″.	Exsec.	D. 1″.	M.	Vers.	D. 1″.	Exsec.	D. 1″.
0	9.749449	3.38	0.107607	7.70	0	9.761463	3.30	0.135515	7.82
1	.749652	3.37	.108069	7.68	1	.761661	3.32	.135984	7.83
2	.749854	3.37	.108530	7.70	2	.761860	3.30	.136454	7.82
3	.750056	3.37	.108992	7.68	3	.762058	3.30	.136923	7.83
4	.750258	3.35	.109453	7.70	4	.762256	3.30	.137393	7.83
5	9.750459	3.37	0.109915	7.70	5	9.762454	3.30	0.137863	7.83
6	.750661	3.37	.110377	7.70	6	.762652	3.30	.138333	7.83
7	.750863	3.37	.110839	7.70	7	.762850	3.28	.138803	7.83
8	.751065	3.35	.111301	7.70	8	.763047	3.30	.139273	7.85
9	.751266	3.37	.111763	7.72	9	.763245	3.30	.139744	7.83
10	9.751468	3.35	0.112226	7.70	10	9.763443	3.30	0.140214	7.85
11	.751669	3.37	.112688	7.72	11	.763641	3.28	.140685	7.85
12	.751871	3.35	.113151	7.72	12	.763838	3.30	.141156	7.85
13	.752072	3.35	.113614	7.72	13	.764036	3.28	.141627	7.85
14	.752273	3.37	.114077	7.72	14	.764233	3.28	.142098	7.85
15	9.752475	3.35	0.114540	7.72	15	9.764430	3.30	0.142569	7.87
16	.752676	3.35	.115003	7.72	16	.764628	3.28	.143041	7.85
17	.752877	3.35	.115466	7.72	17	.764825	3.28	.143512	7.87
18	.753078	3.35	.115929	7.73	18	.765022	3.28	.143984	7.87
19	.753279	3.35	.116393	7.73	19	.765219	3.28	.144456	7.87
20	9.753480	3.35	0.116857	7.73	20	9.765416	3.28	0.144928	7.87
21	.753681	3.33	.117321	7.73	21	.765613	3.28	.145400	7.87
22	.753881	3.35	.117785	7.73	22	.765810	3.28	.145872	7.88
23	.754082	3.35	.118249	7.73	23	.766007	3.28	.146345	7.88
24	.754283	3.33	0.118713	7.73	24	.766204	3.28	.146818	7.87
25	9.754483	3.35	.119177	7.75	25	9.766401	3.27	0.147290	7.88
26	.754684	3.33	.119642	7.73	26	.766597	3.28	.147763	7.88
27	.754884	3.35	.120106	7.75	27	.766794	3.28	.148236	7.90
28	.755085	3.33	.120571	7.75	28	.766991	3.27	.148710	7.88
29	.755285	3.33	.121036	7.75	29	.767187	3.28	.149183	7.90
30	9.755485	3.33	0.121501	7.75	30	9.767384	3.27	0.149657	7.88
31	.755685	3.35	.121966	7.75	31	.767580	3.27	.150130	7.90
32	.755886	3.33	.122431	7.77	32	.767776	3.27	.150604	7.90
33	.756086	3.33	.122897	7.75	33	.767972	3.28	.151078	7.90
34	.756286	3.33	.123362	7.77	34	.768169	3.27	.151552	7.92
35	9.756486	3.32	0.123828	7.77	35	9.768365	3.27	0.152027	7.90
36	.756685	3.33	.124294	7.77	36	.768561	3.27	.152501	7.92
37	.756885	3.33	.124760	7.77	37	.768757	3.27	.152976	7.90
38	.757085	3.33	.125226	7.77	38	.768953	3.27	.153450	7.92
39	.757285	3.32	.125692	7.77	39	.769149	3.25	.153925	7.92
40	9.757484	3.33	0.126158	7.78	40	9.769344	3.27	0.154400	7.93
41	.757684	3.32	.126625	7.78	41	.769540	3.27	.154876	7.92
42	.757883	3.33	.127092	7.77	42	.769736	3.25	.155351	7.92
43	.758083	3.32	.127558	7.78	43	.769931	3.27	.155826	7.93
44	.758282	3.32	.128025	7.78	44	.770127	3.27	.156302	7.93
45	9.758481	3.33	0.128492	7.80	45	9.770323	3.25	0.156778	7.93
46	.758681	3.32	.128960	7.78	46	.770518	3.25	.157254	7.93
47	.758880	3.32	.129427	7.78	47	.770713	3.27	.157730	7.93
48	.759079	3.32	.129894	7.80	48	.770909	3.25	.158206	7.95
49	.759278	3.32	.130362	7.80	49	.771104	3.25	.158683	7.93
50	9.759477	3.32	0.130830	7.80	50	9.771299	3.25	0.159159	7.95
51	.759676	3.32	.131298	7.80	51	.771494	3.25	.159636	7.95
52	.759875	3.30	.131766	7.80	52	.771689	3.25	.160113	7.95
53	.760073	3.32	.132234	7.80	53	.771884	3.25	.160590	7.95
54	.760272	3.32	.132702	7.80	54	.772079	3.25	.161067	7.97
55	9.760471	3.30	0.133170	7.82	55	9.772274	3.25	0.161545	7.95
56	.760669	3.32	.133639	7.82	56	.772469	3.25	.162022	7.97
57	.760868	3.30	.134108	7.82	57	.772664	3.23	.162500	7.97
58	.761066	3.32	.134577	7.82	58	.772858	3.25	.162978	7.97
59	.761265	3.30	.135046	7.82	59	.773053	3.25	.163456	7.97
60	9.761463		0.135515		60	9.773248		0.163934	

TABLE 57.—*Continued*

LOGARITHMIC VERSED SINES AND EXTERNAL SECANTS

66°					67°				
M.	Vers.	D. 1″.	Exsec.	D. 1″.	M.	Vers.	D. 1″.	Exsec.	D. 1″.
0	9.773248	3.23	0.163934	7.98	0	9.784809	3.18	0.192931	8.15
1	.773442	3.23	.164413	7.97	1	.785000	3.18	.193420	8.13
2	.773636	3.25	.164891	7.98	2	.785191	3.17	.193908	8.15
3	.773831	3.23	.165370	7.98	3	.785381	3.18	.194397	8.15
4	.774025	3.23	.165849	7.98	4	.785572	3.18	.194886	8.17
5	9.774219	3.25	0.166328	7.98	5	9.785763	3.17	0.195376	8.15
6	.774414	3.23	.166807	7.98	6	.785953	3.18	.195865	8.17
7	.774608	3.23	.167286	8.00	7	.786144	3.17	.196355	8.17
8	.774802	3.23	.167766	7.98	8	.786334	3.17	.196845	8.17
9	.774996	3.23	.168245	8.00	9	.786524	3.18	.197335	8.17
10	9.775190	3.23	0.168725	8.00	10	9.786715	3.17	0.197825	8.17
11	.775384	3.22	.169205	8.00	11	.786905	3.17	.198315	8.18
12	.775577	3.23	.169685	8.00	12	.787095	3.17	.198806	8.18
13	.775771	3.23	.170165	8.02	13	.787285	3.17	.199297	8.18
14	.775965	3.23	.170646	8.02	14	.787475	3.17	.199788	8.18
15	9.776159	3.22	0.171127	8.00	15	9.787665	3.17	0.200279	8.18
16	.776352	3.23	.171607	8.02	16	.787855	3.17	.200770	8.20
17	.776546	3.22	.172088	8.02	17	.788045	3.17	.201262	8.18
18	.776739	3.23	.172569	8.03	18	.788235	3.17	.201753	8.20
19	.776933	3.22	.173051	8.02	19	.788425	3.15	.202245	8.20
20	9.777126	3.22	0.173532	8.03	20	9.788614	3.17	0.202737	8.20
21	.777319	3.22	.174014	8.03	21	.788804	3.15	.203229	8.22
22	.777512	3.22	.174496	8.03	22	.788993	3.17	.203722	8.22
23	.777705	3.23	.174978	8.03	23	.789183	3.15	.204215	8.20
24	.777899	3.22	.175460	8.03	24	.789372	3.17	.204707	8.22
25	9.778092	3.22	0.175942	8.05	25	9.789562	3.15	0.205200	8.23
26	.778285	3.20	.176425	8.03	26	.789751	3.15	.205694	8.22
27	.778477	3.22	.176907	8.05	27	.789940	3.17	.206187	8.23
28	.778670	3.22	.177390	8.05	28	.790130	3.15	.206681	8.22
29	.778863	3.22	.177873	8.05	29	.790319	3.15	.207174	8.23
30	9.779056	3.20	0.178356	8.05	30	9.790508	3.15	0.207668	8.23
31	.779248	3.22	.178839	8.07	31	.790697	3.15	.208162	8.25
32	.779441	3.22	.179323	8.07	32	.790886	3.15	.208657	8.23
33	.779634	3.20	.179807	8.05	33	.791075	3.15	.209151	8.25
34	.779826	3.20	.180290	8.07	34	.791264	3.15	.209646	8.25
35	9.780018	3.22	0.180774	8.08	35	9.791453	3.13	0.210141	8.25
36	.780211	3.20	.181259	8.07	36	.791641	3.15	.210636	8.25
37	.780403	3.20	.181743	8.07	37	.791830	3.15	.211131	8.27
38	.780595	3.20	.182227	8.08	38	.792019	3.13	.211627	8.27
39	.780787	3.22	.182712	8.08	39	.792207	3.15	.212123	8.25
40	9.780980	3.20	0.183197	8.08	40	9.792396	3.13	0.212618	8.28
41	.781172	3.20	.183682	8.08	41	.792584	3.13	.213115	8.27
42	.781364	3.20	.184167	8.10	42	.792772	3.15	.213611	8.27
43	.781556	3.18	.184653	8.08	43	.792961	3.13	.214107	8.28
44	.781747	3.20	.185138	8.10	44	.793149	3.13	.214604	8.28
45	9.781939	3.20	0.185624	8.10	45	9.793337	3.13	0.215101	8.28
46	.782131	3.20	.186110	8.10	46	.793525	3.15	.215598	8.28
47	.782323	3.18	.186596	8.10	47	.793714	3.13	.216095	8.30
48	.782514	3.20	.187082	8.10	48	.793902	3.13	.216593	8.28
49	.782706	3.18	.187568	8.12	49	.794090	3.12	.217090	8.30
50	9.782897	3.20	0.188055	8.12	50	9.794277	3.13	0.217588	8.30
51	.783089	3.18	.188542	8.12	51	.794465	3.13	.218086	8.32
52	.783280	3.18	.189029	8.12	52	.794653	3.13	.218585	8.30
53	.783471	3.20	.189516	8.12	53	.794841	3.12	.219083	8.32
54	.783663	3.18	.190003	8.13	54	.795028	3.13	.219582	8.32
55	9.783854	3.18	0.190491	8.12	55	9.795216	3.13	0.220081	8.32
56	.784045	3.18	.190978	8.13	56	.795404	3.12	.220580	8.32
57	.784236	3.18	.191466	8.13	57	.795591	3.13	.221079	8.32
58	.784427	3.18	.191954	8.15	58	.795779	3.12	.221578	8.33
59	.784618	3.18	.192443	8.13	59	.795966	3.12	.222078	8.33
60	9.784809		0.192931		60	9.796153		0.222578	

Table 57.—*Continued*

LOGARITHMIC VERSED SINES AND EXTERNAL SECANTS

68°					69°				
M.	Vers.	D. 1″.	Exsec.	D. 1″.	M.	Vers.	D. 1″.	Exsec.	D. 1″.
0	9.796153	3.13	0.222578	8.33	0	9.807286	3.07	0.252957	8.55
1	.796341	3.12	.223078	8.33	1	.807470	3.07	.253470	8.55
2	.796528	3.12	.223578	8.35	2	.807654	3.05	.253983	8.57
3	.796715	3.12	.224079	8.33	3	.807837	3.07	.254497	8.55
4	.796902	3.12	.224579	8.35	4	.808021	3.05	.255010	8.57
5	9.797089	3.12	0.225080	8.35	5	9.808204	3.07	0.255524	8.58
6	.797276	3.12	.225581	8.37	6	.808388	3.05	.256039	8.57
7	.797463	3.12	.226083	8.35	7	.808571	3.07	.256553	8.58
8	.797650	3.12	.226584	8.37	8	.808755	3.05	.257068	8.57
9	.797837	3.10	.227086	8.37	9	.808938	3.05	.257582	8.60
10	9.798023	3.12	0.227588	8.37	10	9.809121	3.07	0.258098	8.58
11	.798210	3.12	.228090	8.37	11	.809305	3.05	.258613	8.60
12	.798397	3.10	.228592	8.38	12	.809488	3.05	.259129	8.58
13	.798583	3.12	.229095	8.38	13	.809671	3.05	.259644	8.60
14	.798770	3.10	.229598	8.38	14	.809854	3.05	.260160	8.62
15	9.798956	3.10	0.230101	8.38	15	9.810037	3.05	0.260677	8.60
16	.799142	3.12	.230604	8.38	16	.810220	3.05	.261193	8.62
17	.799329	3.10	.231107	8.40	17	.810403	3.03	.261710	8.62
18	.799515	3.10	.231611	8.40	18	.810585	3.05	.262227	8.62
19	.799701	3.10	.232115	8.40	19	.810768	3.05	.262744	8.63
20	9.799887	3.12	0.232619	8.40	20	9.810951	3.05	0.263262	8.62
21	.800074	3.10	.233123	8.40	21	.811134	3.03	.263779	8.63
22	.800260	3.10	.233627	8.42	22	.811316	3.05	.264297	8.63
23	.800446	3.08	.234132	8.42	23	.811499	3.03	.264815	8.65
24	.800631	3.10	.234637	8.42	24	.811681	3.05	.265334	8.65
25	9.800817	3.10	0.235142	8.42	25	9.811864	3.03	0.265853	8.63
26	.801003	3.10	.235647	8.43	26	.812046	3.03	.266371	8.67
27	.801189	3.10	.236153	8.42	27	.812228	3.03	.266891	8.65
28	.801375	3.08	.236658	8.43	28	.812410	3.05	.267410	8.67
29	.801560	3.10	.237164	8.43	29	.812593	3.03	.267930	8.65
30	9.801746	3.08	0.237670	8.45	30	9.812775	3.03	0.268449	8.68
31	.801931	3.10	.238177	8.43	31	.812957	3.03	.268970	8.67
32	.802117	3.08	.238683	8.45	32	.813139	3.03	.269490	8.68
33	.802302	3.08	.239190	8.45	33	.813321	3.03	.270011	8.67
34	.802487	3.10	.239697	8.45	34	.813503	3.03	.270531	8.68
35	9.802673	3.08	0.240204	8.47	35	9.813685	3.02	0.271052	8.70
36	.802858	3.08	.240712	8.45	36	.813866	3.03	.271574	8.68
37	.803043	3.08	.241219	8.47	37	.814048	3.03	.272095	8.70
38	.803228	3.08	.241727	8.47	38	.814230	3.02	.272617	8.70
39	.803413	3.08	.242235	8.48	39	.814411	3.03	.273139	8.72
40	9.803598	3.08	0.242744	8.47	40	9.814593	3.03	0.273662	8.70
41	.803783	3.08	.243252	8.48	41	.814775	3.02	.274184	8.72
42	.803968	3.08	.243761	8.48	42	.814956	3.02	.274707	8.72
43	.804153	3.08	.244270	8.48	43	.815137	3.03	.275230	8.72
44	.804338	3.07	.244779	8.50	44	.815319	3.02	.275753	8.73
45	9.804522	3.08	0.245289	8.48	45	9.815500	3.02	0.276277	8.73
46	.804707	3.08	.245798	8.50	46	.815681	3.02	.276801	8.73
47	.804892	3.07	.246308	8.50	47	.815862	3.03	.277325	8.73
48	.805076	3.08	.246818	8.52	48	.816044	3.02	.277849	8.75
49	.805261	3.07	.247329	8.50	49	.816225	3.02	.278374	8.75
50	9.805445	3.07	0.247839	8.52	50	9.816406	3.02	0.278899	8.75
51	.805629	3.08	.248350	8.52	51	.816587	3.00	.279424	8.75
52	.805814	3.07	.248861	8.52	52	.816767	3.02	.279949	8.77
53	.805998	3.07	.249372	8.52	53	.816948	3.02	.280475	8.75
54	.806182	3.07	.249883	8.53	54	.817129	3.02	.281000	8.78
55	9.806366	3.07	0.250395	8.53	55	9.817310	3.00	0.281527	8.77
56	.806550	3.07	.250907	8.53	56	.817490	3.02	.282053	8.78
57	.806734	3.07	.251419	8.55	57	.817671	3.02	.282580	8.77
58	.806918	3.07	.251932	8.53	58	.817852	3.00	.283106	8.80
59	.807102	3.07	.252444	8.55	59	.818032	3.02	.283634	8.78
60	9.807286		0.252957		60	9.818213		0.284161	

TABLE 57.—*Continued*

LOGARITHMIC VERSED SINES AND EXTERNAL SECANTS

70°					71°				
M.	Vers.	D. 1″.	Exsec.	D. 1″.	M.	Vers.	D. 1″.	Exsec.	D. 1″.
0	9.818213	3.00	0.284161	8.80	0	9.828938	2.95	0.316296	9.07
1	.818393	3.00	.284689	8.78	1	.829115	2.95	.316840	9.08
2	.818573	3.02	.285216	8.82	2	.829292	2.95	.317385	9.07
3	.818754	3.00	.285745	8.80	3	.829469	2.95	.317929	9.10
4	.818934	3.00	.286273	8.82	4	.829646	2.95	.318475	9.08
5	9.819114	3.00	0.286802	8.82	5	9.829823	2.95	0.319020	9.08
6	.819294	3.00	.287331	8.82	6	.830000	2.95	.319565	9.10
7	.819474	3.00	.287860	8.82	7	.830177	2.93	.320111	9.12
8	.819654	3.00	.288389	8.83	8	.830353	2.95	.320658	9.10
9	.819834	3.00	.288919	8.83	9	.830530	2.93	.321204	9.12
10	9.820014	3.00	0.289449	8.83	10	9.830706	2.95	0.321751	9.12
11	.820194	3.00	.289979	8.85	11	.830883	2.93	.322298	9.12
12	.820374	2.98	.290510	8.85	12	.831059	2.95	.322845	9.13
13	.820553	3.00	.291041	8.85	13	.831236	2.93	.323393	9.13
14	.820733	3.00	.291572	8.85	14	.831412	2.95	.323941	9.13
15	9.820913	2.98	0.292103	8.87	15	9.831589	2.93	0.324489	9.15
16	.821092	3.00	.292635	8.85	16	.831765	2.93	.325038	9.15
17	.821272	2.98	.293166	8.87	17	.831941	2.93	.325587	9.15
18	.821451	3.00	.293698	8.88	18	.832117	2.93	.326136	9.17
19	.821631	2.98	.294231	8.88	19	.832293	2.93	.326686	9.15
20	9.821810	2.98	0.294764	8.87	20	9.832469	2.93	0.327235	9.18
21	.821989	2.98	.295296	8.90	21	.832645	2.93	.327786	9.17
22	.822168	3.00	.295830	8.88	22	.832821	2.93	.328336	9.18
23	.822348	2.98	.296363	8.90	23	.832997	2.93	.328887	9.18
24	.822527	2.98	.296897	8.90	24	.833173	2.93	.329438	9.18
25	9.822706	2.98	0.297431	8.90	25	9.833349	2.93	0.329989	9.20
26	.822885	2.98	.297965	8.92	26	.833525	2.92	.330541	9.20
27	.823064	2.98	.298500	8.90	27	.833700	2.93	.331093	9.20
28	.823243	2.97	.299034	8.93	28	.833876	2.92	.331645	9.22
29	.823421	2.98	.299570	8.92	29	.834051	2.93	.332198	9.20
30	9.823600	2.98	0.300105	8.93	30	9.834227	2.92	0.332750	9.23
31	.823779	2.98	.300641	8.92	31	.834402	2.93	.333304	9.22
32	.823958	2.97	.301176	8.95	32	.834578	2.92	.333857	9.23
33	.824136	2.98	.301713	8.93	33	.834753	2.92	.334411	9.23
34	.824315	2.97	.302249	8.95	34	.834928	2.93	.334965	9.25
35	9.824493	2.98	0.302786	8.95	35	9.835104	2.92	0.335520	9.23
36	.824672	2.97	.303323	8.95	36	.835279	2.92	.336074	9.25
37	.824850	2.97	.303860	8.97	37	.835454	2.92	.336629	9.27
38	.825028	2.98	.304398	8.97	38	.835629	2.92	.337185	9.27
39	.825207	2.97	.304936	8.97	39	.835804	2.92	.337741	9.27
40	9.825385	2.97	0.305474	8.97	40	9.835979	2.92	0.338297	9.27
41	.825563	2.97	.306012	8.98	41	.836154	2.92	.338853	9.28
42	.825741	2.97	.306551	8.98	42	.836329	2.92	.339410	9.28
43	.825919	2.97	.307090	8.98	43	.836504	2.90	.339967	9.28
44	.826097	2.97	.307629	9.00	44	.836678	2.92	.340524	9.30
45	9.826275	2.97	0.308169	8.98	45	9.836853	2.92	0.341082	9.30
46	.826453	2.97	.308708	9.02	46	.837028	2.90	.341640	9.30
47	.826631	2.97	.309249	9.00	47	.837202	2.92	.342198	9.30
48	.826809	2.97	.309789	9.02	48	.837377	2.90	.342756	9.32
49	.826987	2.95	.310330	9.02	49	.837551	2.92	.343315	9.33
50	9.827164	2.97	0.310871	9.02	50	9.837726	2.90	0.343875	9.32
51	.827342	2.95	.311412	9.02	51	.837900	2.92	.344434	9.33
52	.827519	2.97	.311953	9.03	52	.838075	2.90	.344994	9.33
53	.827697	2.95	.312495	9.03	53	.838249	2.90	.345554	9.35
54	.827874	2.97	.313037	9.05	54	.838423	2.90	.346115	9.35
55	9.828052	2.95	0.313580	9.03	55	9.838597	2.90	0.346676	9.35
56	.828229	2.95	.314122	9.05	56	.838771	2.90	.347237	9.35
57	.828406	2.97	.314665	9.07	57	.838945	2.90	.347798	9.37
58	.828584	2.95	.315209	9.05	58	.839119	2.90	.348360	9.37
59	.828761	2.95	.315752	9.07	59	.839293	2.90	.348922	9.38
60	9.828938		0.316296		60	9.839467		0.349485	

TABLE 57.—*Continued*

LOGARITHMIC VERSED SINES AND EXTERNAL SECANTS

72°					73°				
M.	Vers.	D. 1″.	Exsec.	D. 1″.	M.	Vers.	D. 1″.	Exsec.	D. 1″.
0	9.839467	2.90	0.349485	9.38	0	9.849805	2.85	0.383870	9.73
1	.839641	2.90	.350048	9.38	1	.849976	2.85	.384454	9.73
2	.839815	2.90	.350611	9.40	2	.850147	2.83	.385038	9.75
3	.839989	2.88	.351175	9.38	3	.850317	2.85	.385623	9.77
4	.840162	2.90	.351738	9.42	4	.850488	2.83	.386209	9.75
5	9.840336	2.90	0.352303	9.40	5	9.850658	2.85	0.386794	9.77
6	.840510	2.88	.352867	9.42	6	.850829	2.83	.387380	9.78
7	.840683	2.90	.353432	9.42	7	.850999	2.83	.387967	9.78
8	.840857	2.88	.353997	9.43	8	.851169	2.85	.388554	9.78
9	.841030	2.90	.354563	9.43	9	.851340	2.83	.389141	9.78
10	9.841204	2.88	0.355129	9.43	10	9.851510	2.83	0.389728	9.80
11	.841377	2.88	.355695	9.43	11	.851680	2.83	.390316	9.82
12	.841550	2.88	.356261	9.45	12	.851850	2.83	.390905	9.80
13	.841723	2.88	.356828	9.45	13	.852020	2.83	.391493	9.82
14	.841896	2.90	.357395	9.47	14	.852190	2.83	.392082	9.83
15	9.842070	2.88	0.357963	9.47	15	9.852360	2.83	0.392672	9.83
16	.842243	2.88	.358531	9.47	16	.852530	2.83	.393262	9.83
17	.842416	2.88	.359099	9.48	17	.852700	2.83	.393852	9.85
18	.842589	2.88	.359668	9.48	18	.852870	2.83	.394443	9.85
19	.842762	2.87	.360237	9.48	19	.853040	2.82	.395034	9.85
20	9.842934	2.88	0.360806	9.50	20	9.853209	2.83	0.395625	9.87
21	.843107	2.88	.361376	9.50	21	.853379	2.83	.396217	9.87
22	.843280	2.88	.361946	9.50	22	.853549	2.82	.396809	9.88
23	.843453	2.87	.362516	9.52	23	.853718	2.83	.397402	9.88
24	.843625	2.88	.363087	9.52	24	.853888	2.82	.397995	9.90
25	9.843798	2.87	0.363658	9.52	25	9.854057	2.83	0.398589	9.88
26	.843970	2.88	.364229	9.53	26	.854227	2.82	.399182	9.92
27	.844143	2.87	.364801	9.53	27	.854396	2.82	.399777	9.90
28	.844315	2.88	.365373	9.53	28	.854565	2.83	.400371	9.92
29	.844488	2.87	.365945	9.55	29	.854735	2.82	.400966	9.93
30	9.844660	2.87	0.366518	9.55	30	9.854904	2.82	0.401562	9.93
31	.844832	2.87	.367091	9.57	31	.855073	2.82	.402158	9.93
32	.845004	2.88	.367665	9.57	32	.855242	2.82	.402754	9.95
33	.845177	2.87	.368239	9.57	33	.855411	2.82	.403351	9.95
34	.845349	2.87	.368813	9.57	34	.855580	2.82	.403948	9.95
35	9.845521	2.87	0.369387	9.58	35	9.855749	2.82	0.404545	9.97
36	.845693	2.87	.369962	9.60	36	.855918	2.82	.405143	9.98
37	.845865	2.87	.370538	9.58	37	.856087	2.80	.405742	9.97
38	.846037	2.85	.371113	9.60	38	.856255	2.82	.406340	9.98
39	.846208	2.87	.371689	9.62	39	.856424	2.82	.406939	10.00
40	9.846380	2.87	0.372266	9.60	40	9.856593	2.82	0.407539	10.00
41	.846552	2.87	.372842	9.62	41	.856762	2.80	.408139	10.00
42	.846724	2.85	.373419	9.63	42	.856930	2.82	.408739	10.02
43	.846895	2.87	.373997	9.63	43	.857099	2.80	.409340	10.02
44	.847067	2.85	.374575	9.63	44	.857267	2.82	.409941	10.03
45	9.847238	2.87	0.375153	9.63	45	9.857436	2.80	0.410543	10.03
46	.847410	2.85	.375731	9.65	46	.857604	2.80	.411145	10.03
47	.847581	2.87	.376310	9.67	47	.857772	2.82	.411747	10.05
48	.847753	2.85	.376890	9.65	48	.857941	2.80	.412350	10.07
49	.847924	2.85	.377469	9.67	49	.858109	2.80	.412954	10.05
50	9.848095	2.87	0.378049	9.68	50	9.858277	2.80	0.413557	10.07
51	.848267	2.85	.378630	9.67	51	.858445	2.80	.414161	10.08
52	.848438	2.85	.379210	9.70	52	.858613	2.80	.414766	10.08
53	.848609	2.85	.379792	9.68	53	.858781	2.80	.415371	10.08
54	.848780	2.85	.380373	9.70	54	.858949	2.80	.415976	10.10
55	9.848951	2.85	0.380955	9.70	55	9.859117	2.80	0.416582	10.12
56	.849122	2.85	.381537	9.72	56	.859285	2.80	.417189	10.10
57	.849293	2.85	.382120	9.72	57	.859453	2.80	.417795	10.12
58	.849464	2.83	.382703	9.72	58	.859621	2.78	.418402	10.12
59	.849634	2.85	.383286	9.73	59	.859788	2.80	.419010	10.1
60	9.849805		0.383870		60	9.859956		0.419618	

TABLE 57.—*Continued*

LOGARITHMIC VERSED SINES AND EXTERNAL SECANTS

74°					75°				
M.	Vers.	D. 1″.	Exsec.	D. 1″.	M.	Vers.	D. 1″.	Exsec.	D. 1″.
0	9.859956	2.80	0.419618	10.13	0	9.869924	2.75	0.456928	10.60
1	.860124	2.78	.420226	10.15	1	.870089	2.73	.457564	10.62
2	.860291	2.80	.420835	10.17	2	.870253	2.75	.458201	10.63
3	.860459	2.78	.421445	10.15	3	.870418	2.73	.458839	10.62
4	.860626	2.80	.422054	10.17	4	.870582	2.75	.459476	10.65
5	9.860794	2.78	0.422664	10.18	5	9.870747	2.73	0.460115	10.65
6	.860961	2.78	.423275	10.18	6	.870911	2.75	.460754	10.65
7	.861128	2.80	.423886	10.20	7	.871076	2.73	.461393	10.67
8	.861296	2.78	.424498	10.20	8	.871240	2.73	.462033	10.67
9	.861463	2.78	.425110	10.20	9	.871404	2.73	.462673	10.68
10	9.861630	2.78	0.425722	10.22	10	9.871568	2.73	0.463314	10.70
11	.861797	2.78	.426335	10.22	11	.871732	2.73	.463956	10.70
12	.861964	2.78	.426948	10.23	12	.871896	2.73	.464598	10.70
13	.862131	2.78	.427562	10.23	13	.872060	2.73	.465240	10.72
14	.862298	2.78	.428176	10.23	14	.872224	2.73	.465883	10.73
15	9.862465	2.78	0.428790	10.27	15	9.872388	2.73	0.466527	10.73
16	.862632	2.78	.429406	10.25	16	.872552	2.73	.467171	10.73
17	.862799	2.77	.430021	10.27	17	.872716	2.73	.467815	10.75
18	.862965	2.78	.430637	10.27	18	.872880	2.72	.468460	10.77
19	.863132	2.78	.431253	10.28	19	.873043	2.73	.469106	10.77
20	9.863299	2.77	0.431870	10.30	20	9.873207	2.73	0.469752	10.77
21	.863465	2.78	.432488	10.28	21	.873371	2.72	.470398	10.78
22	.863632	2.78	.433105	10.32	22	.873534	2.73	.471045	10.80
23	.863799	2.77	.433724	10.30	23	.873698	2.72	.471693	10.80
24	.863965	2.77	.434342	10.32	24	.873861	2.73	.472341	10.82
25	9.864131	2.78	0.434961	10.33	25	9.874025	2.72	0.472990	10.82
26	.864298	2.77	.435581	10.33	26	.874188	2.72	.473639	10.83
27	.864464	2.77	.436201	10.33	27	.874351	2.73	.474289	10.83
28	.864630	2.78	.436821	10.35	28	.874515	2.72	.474939	10.85
29	.864797	2.77	.437442	10.37	29	.874678	2.72	.475590	10.87
30	9.864963	2.77	0.438064	10.37	30	9.874841	2.72	0.476242	10.85
31	.865129	2.77	.438686	10.37	31	.875004	2.72	.476893	10.88
32	.865295	2.77	.439308	10.38	32	.875167	2.72	.477546	10.88
33	.865461	2.77	.439931	10.38	33	.875330	2.72	.478199	10.88
34	.865627	2.77	.440554	10.40	34	.875493	2.72	.478852	10.90
35	9.865793	2.77	0.441178	10.40	35	9.875656	2.72	0.479506	10.92
36	.865959	2.75	.441802	10.42	36	.875819	2.72	.480161	10.92
37	.866124	2.77	.442427	10.42	37	.875982	2.72	.480816	10.93
38	.866290	2.77	.443052	10.43	38	.876145	2.72	.481472	10.93
39	.866456	2.77	.443678	10.43	39	.876308	2.70	.482128	10.95
40	9.866622	2.75	0.444304	10.45	40	9.876470	2.72	0.482785	10.95
41	.866787	2.77	.444931	10.45	41	.876633	2.72	.483442	10.97
42	.866953	2.75	.445558	10.45	42	.876796	2.70	.484100	10.98
43	.867118	2.77	.446185	10.47	43	.876958	2.72	.484759	10.98
44	.867284	2.75	.446813	10.48	44	.877121	2.70	.485418	10.98
45	9.867449	2.75	0.447442	10.48	45	9.877283	2.70	0.486077	11.02
46	.867614	2.77	.448071	10.48	46	.877445	2.72	.486738	11.00
47	.867780	2.75	.448700	10.50	47	.877608	2.70	.487398	11.02
48	.867945	2.75	.449330	10.52	48	.877770	2.70	.488059	11.03
49	.868110	2.75	.449961	10.52	49	.877932	2.72	.488721	11.05
50	9.868275	2.75	0.450592	10.52	50	9.878095	2.70	0.489384	11.05
51	.868440	2.77	.451223	10.53	51	.878257	2.70	.490047	11.05
52	.868606	2.75	.451855	10.53	52	.878419	2.70	.490710	11.07
53	.868771	2.75	.452487	10.55	53	.878581	2.70	.491374	11.08
54	.868936	2.73	.453120	10.57	54	.878743	2.70	.492039	11.08
55	9.869100	2.75	0.453754	10.57	55	9.878905	2.70	0.492704	11.10
56	.869265	2.75	.454388	10.57	56	.879067	2.70	.493370	11.10
57	.869430	2.75	.455022	10.58	57	.879229	2.68	.494036	11.12
58	.869595	2.75	.455657	10.58	58	.879390	2.70	.494703	11.13
59	.869760	2.73	.456292	10.60	59	.879552	2.70	.495371	11.13
60	9.869924		0.456928		60	9.879714		0.496039	

TABLE 57.—*Continued*

LOGARITHMIC VERSED SINES AND EXTERNAL SECANTS

76°					77°				
M.	Vers.	D. 1″.	Exsec.	D. 1″.	M.	Vers.	D. 1″.	Exsec.	D. 1″.
0	9.879714	2.70	0.496039	11.13	0	9.889329	2.65	0.537241	11.77
1	.879876	2.68	.496707	11.17	1	.889488	2.65	.537947	11.78
2	.880037	2.70	.497377	11.17	2	.889647	2.63	.538654	11.80
3	.880199	2.68	.498047	11.17	3	.889805	2.65	.539362	11.82
4	.880360	2.70	.498717	11.18	4	.889964	2.65	.540071	11.82
5	9.880522	2.68	0.499388	11.20	5	9.890123	2.63	0.540780	11.83
6	.880683	2.70	.500060	11.20	6	.890281	2.65	.541490	11.83
7	.880845	2.68	.500732	11.22	7	.890440	2.63	.542200	11.85
8	.881006	2.68	.501405	11.22	8	.890598	2.65	.542911	11.87
9	.881167	2.68	.502078	11.23	9	.890757	2.63	.543623	11.88
10	9.881328	2.70	0.502752	11.23	10	9.890915	2.63	0.544336	11.88
11	.881490	2.68	.503426	11.27	11	.891073	2.65	.545049	11.90
12	.881651	2.68	.504102	11.25	12	.891232	2.63	.545763	11.90
13	.881812	2.68	.504777	11.28	13	.891390	2.63	.546477	11.93
14	.881973	2.68	.505454	11.28	14	.891548	2.63	.547193	11.93
15	9.882134	2.68	0.506131	11.28	15	9.891706	2.63	0.547909	11.95
16	.882295	2.68	.506808	11.30	16	.891864	2.63	.548626	11.95
17	.882456	2.68	.507486	11.32	17	.892022	2.63	.549343	11.97
18	.882617	2.67	.508165	11.32	18	.892180	2.63	.550061	11.98
19	.882777	2.68	.508844	11.33	19	.892338	2.63	.550780	12.00
20	9.882938	2.68	0.509524	11.35	20	9.892496	2.63	0.551500	12.00
21	.883099	2.68	.510205	11.35	21	.892654	2.63	.552220	12.02
22	.883260	2.67	.510886	11.37	22	.892812	2.62	.552941	12.03
23	.883420	2.68	.511568	11.37	23	.892969	2.63	.553663	12.03
24	.883581	2.67	.512250	11.38	24	.893127	2.63	.554385	12.07
25	9.883741	2.68	0.512933	11.40	25	9.893285	2.62	0.555109	12.07
26	.883902	2.67	.513617	11.40	26	.893442	2.63	.555833	12.07
27	.884062	2.68	.514301	11.42	27	.893600	2.63	.556557	12.10
28	.884223	2.67	.514986	11.43	28	.893758	2.62	.557283	12.10
29	.884383	2.67	.515672	11.43	29	.893915	2.62	.558009	12.12
30	9.884543	2.67	0.516358	11.45	30	9.894072	2.63	0.558736	12.12
31	.884703	2.68	.517045	11.45	31	.894230	2.62	.559463	12.15
32	.884864	2.67	.517732	11.47	32	.894387	2.62	.560192	12.15
33	.885024	2.67	.518420	11.48	33	.894544	2.63	.560921	12.17
34	.885184	2.67	.519109	11.48	34	.894702	2.62	.561651	12.17
35	9.885344	2.67	0.519798	11.50	35	9.894859	2.62	0.562381	12.20
36	.885504	2.67	.520488	11.52	36	.895016	2.62	.563113	12.20
37	.885664	2.67	.521179	11.52	37	.895173	2.62	.563845	12.20
38	.885824	2.65	.521870	11.53	38	.895330	2.62	.564577	12.23
39	.885983	2.67	.522562	11.53	39	.895487	2.62	.565311	12.23
40	9.886143	2.67	0.523254	11.55	40	9.895644	2.62	0.566045	12.27
41	.886303	2.67	.523947	11.57	41	.895801	2.62	.566781	12.25
42	.886463	2.65	.524641	11.57	42	.895958	2.62	.567516	12.28
43	.886622	2.67	.525335	11.58	43	.896115	2.62	.568253	12.28
44	.886782	2.65	.526030	11.60	44	.896272	2.60	.568990	12.32
45	9.886941	2.67	0.526726	11.62	45	9.896428	2.62	0.569729	12.32
46	.887101	2.65	.527423	11.62	46	.896585	2.62	.570468	12.32
47	.887260	2.67	.528120	11.62	47	.896742	2.60	.571207	12.35
48	.887420	2.65	.528817	11.65	48	.896898	2.62	.571948	12.35
49	.887579	2.67	.529516	11.65	49	.897055	2.60	.572689	12.37
50	9.887739	2.65	0.530215	11.65	50	9.897211	2.62	0.573431	12.38
51	.887898	2.65	.530914	11.67	51	.897368	2.60	.574174	12.38
52	.888057	2.65	.531614	11.68	52	.897524	2.60	.574917	12.42
53	.888216	2.65	.532315	11.70	53	.897680	2.62	.575662	12.42
54	.888375	2.65	.533017	11.70	54	.897837	2.60	.576407	12.43
55	9.888534	2.65	0.533719	11.72	55	9.897993	2.60	0.577153	12.45
56	.888693	2.65	.534422	11.73	56	.898149	2.60	.577900	12.45
57	.888852	2.65	.535126	11.73	57	.898305	2.60	.578647	12.48
58	.889011	2.65	.535830	11.75	58	.898461	2.62	.579396	12.48
59	.889170	2.65	.536535	11.77	59	.898618	2.60	.580145	12.50
60	9.889329		0.537241		60	9.898774		0.580895	

TABLE 57.—*Continued*

LOGARITHMIC VERSED SINES AND EXTERNAL SECANTS

78°					79°				
M.	Vers.	D. 1″.	Exsec.	D. 1″.	M.	Vers.	D. 1″.	Exsec.	D. 1″.
0	9.898774	2.60	0.580895	12.50	0	9.908051	2.55	0.627452	13.40
1	.898930	2.60	.581645	12.53	1	.908204	2.55	.628256	13.40
2	.899086	2.58	.582397	12.53	2	.908357	2.57	.629060	13.43
3	.899241	2.60	.583149	12.57	3	.908511	2.55	.629866	13.45
4	.899397	2.60	.583903	12.57	4	.908664	2.55	.630673	13.45
5	9.899553	2.60	0.584657	12.57	5	9.908817	2.55	0.631480	13.48
6	.899709	2.60	.585411	12.60	6	.908970	2.55	.632289	13.48
7	.899865	2.58	.586167	12.60	7	.909123	2.55	.633098	13.52
8	.900020	2.60	.586923	12.63	8	.909276	2.53	.633909	13.52
9	.900176	2.58	.587681	12.63	9	.909428	2.55	.634720	13.55
10	9.900331	2.60	0.588439	12.65	10	9.909581	2.55	0.635533	13.55
11	.900487	2.58	.589198	12.65	11	.909734	2.55	.636346	13.58
12	.900642	2.60	.589957	12.68	12	.909887	2.53	.637161	13.58
13	.900798	2.58	.590718	12.68	13	.910039	2.55	.637976	13.60
14	.900953	2.58	.591479	12.72	14	.910192	2.55	.638792	13.63
15	9.901108	2.60	0.592242	12.72	15	9.910345	2.53	0.639610	13.63
16	.901264	2.58	.593005	12.73	16	.910497	2.55	.640428	13.67
17	.901419	2.58	.593769	12.73	17	.910650	2.53	.641248	13.67
18	.901574	2.58	.594533	12.77	18	.910802	2.55	.642068	13.70
19	.901729	2.58	.595299	12.78	19	.910955	2.53	.642890	13.72
20	9.901884	2.60	0.596066	12.78	20	9.911107	2.53	0.643713	13.72
21	.902040	2.58	.596833	12.80	21	.911259	2.55	.644536	13.75
22	.902195	2.58	.597601	12.82	22	.911412	2.53	.645361	13.75
23	.902350	2.57	.598370	12.83	23	.911564	2.53	.646186	13.78
24	.902504	2.58	.599140	12.85	24	.911716	2.53	.647013	13.80
25	9.902659	2.58	0.599911	12.85	25	9.911868	2.53	0.647841	13.82
26	.902814	2.58	.600682	12.88	26	.912020	2.53	.648670	13.82
27	.902969	2.58	.601455	12.88	27	.912172	2.53	.649499	13.85
28	.903124	2.57	.602228	12.92	28	.912324	2.53	.650330	13.87
29	.903278	2.58	.603003	12.92	29	.912476	2.53	.651162	13.88
30	9.903433	2.58	0.603778	12.93	30	9.912628	2.53	0.651995	13.90
31	.903588	2.57	.604554	12.95	31	.912780	2.53	.652829	13.92
32	.903742	2.58	.605331	12.95	32	.912932	2.53	.653664	13.95
33	.903897	2.57	.606108	12.98	33	.913084	2.52	.654501	13.95
34	.904051	2.58	.606887	13.00	34	.913235	2.53	.655338	13.97
35	9.904206	2.57	0.607667	13.00	35	9.913387	2.53	0.656176	14.00
36	.904360	2.57	.608447	13.02	36	.913539	2.52	.657016	14.00
37	.904514	2.57	.609228	13.03	37	.913690	2.53	.657856	14.03
38	.904668	2.58	.610010	13.07	38	.913842	2.52	.658698	14.03
39	.904823	2.57	.610794	13.07	39	.913993	2.53	.659540	14.07
40	9.904977	2.57	0.611578	13.08	40	9.914145	2.52	0.660384	14.08
41	.905131	2.57	.612363	13.08	41	.914296	2.53	.661229	14.10
42	.905285	2.57	.613148	13.12	42	.914448	2.52	.662075	14.12
43	.905439	2.57	.613935	13.13	43	.914599	2.52	.662922	14.13
44	.905593	2.57	.614723	13.13	44	.914750	2.53	.663770	14.15
45	9.905747	2.57	0.615511	13.17	45	9.914902	2.52	0.664619	14.18
46	.905901	2.57	.616301	13.17	46	.915053	2.52	.665470	14.18
47	.906055	2.57	.617091	13.20	47	.915204	2.52	.666321	14.22
48	.906209	2.57	.617883	13.20	48	.915355	2.52	.667174	14.23
49	.906363	2.55	.618675	13.22	49	.915506	2.52	.668028	14.25
50	9.906516	2.57	0.619468	13.23	50	9.915657	2.52	0.668883	14.27
51	.906670	2.57	.620262	13.25	51	.915808	2.52	.669739	14.28
52	.906824	2.55	.621057	13.27	52	.915959	2.52	.670596	14.30
53	.906977	2.57	.621853	13.28	53	.916110	2.52	.671454	14.33
54	.907131	2.55	.622650	13.30	54	.916261	2.52	.672314	14.33
55	9.907284	2.57	0.623448	13.32	55	9.916412	2.50	0.673174	14.37
56	.907438	2.55	.624247	13.33	56	.916562	2.52	.674036	14.38
57	.907591	2.55	.625047	13.35	57	.916713	2.52	.674899	14.40
58	.907744	2.57	.625848	13.37	58	.916864	2.50	.675763	14.42
59	.907898	2.55	.626650	13.37	59	.917014	2.52	.676628	14.45
60	9.908051		0.627452		60	9.917165		0.677495	

TABLE 57.—*Continued*

LOGARITHMIC VERSED SINES AND EXTERNAL SECANTS

80°					81°				
M.	Vers.	D. 1″.	Exsec.	D. 1″.	M.	Vers.	D. 1″.	Exsec.	D. 1″.
0	9.917165	2.52	0.677495	14.45	0	9.926119	2.47	0.731786	15.78
1	.917316	2.50	.678362	14.48	1	.926267	2.47	.732733	15.78
2	.917466	2.50	.679231	14.50	2	.926415	2.45	.733680	15.83
3	.917616	2.52	.680101	14.52	3	.926562	2.47	.734630	15.83
4	.917767	2.50	.680972	14.55	4	.926710	2.47	.735580	15.87
5	9.917917	2.52	0.681845	14.55	5	9.926858	2.47	0.736532	15.90
6	.918068	2.50	.682718	14.58	6	.927006	2.45	.737486	15.92
7	.918218	2.50	.683593	14.60	7	.927153	2.47	.738441	15.95
8	.918368	2.50	.684469	14.62	8	.927301	2.45	.739398	15.97
9	.918518	2.50	.685346	14.63	9	.927448	2.47	.740356	16.00
10	9.918668	2.50	0.686224	14.67	10	9.927596	2.45	0.741316	16.02
11	.918818	2.50	.687104	14.68	11	.927743	2.47	.742277	16.03
12	.918968	2.50	.687985	14.70	12	.927891	2.45	.743239	16.08
13	.919118	2.50	.688867	14.72	13	.928038	2.45	.744204	16.08
14	.919268	2.50	.689750	14.73	14	.928185	2.47	.745169	16.13
15	9.919418	2.50	0.690634	14.77	15	9.928333	2.45	0.746137	16.13
16	.919568	2.50	.691520	14.78	16	.928480	2.45	.747105	16.18
17	.919718	2.50	.692407	14.80	17	.928627	2.45	.748076	16.20
18	.919868	2.50	.693295	14.83	18	.928774	2.45	.749048	16.22
19	.920018	2.48	.694185	14.83	19	.928921	2.45	.750021	16.25
20	9.920167	2.50	0.695075	14.87	20	9.929068	2.45	0.750996	16.28
21	.920317	2.48	.695967	14.90	21	.929215	2.45	.751973	16.30
22	.920466	2.50	.696861	14.90	22	.929362	2.45	.752951	16.33
23	.920616	2.50	.697755	14.93	23	.929509	2.45	.753931	16.35
24	.920766	2.48	.698651	14.95	24	.929656	2.45	.754912	16.38
25	9.920915	2.48	0.699548	14.97	25	9.929803	2.45	0.755895	16.42
26	.921064	2.50	.700446	15.00	26	.929950	2.45	.756880	16.43
27	.921214	2.48	.701346	15.02	27	.930097	2.43	.757866	16.47
28	.921363	2.48	.702247	15.03	28	.930243	2.45	.758854	16.50
29	.921512	2.50	.703149	15.05	29	.930390	2.45	.759844	16.52
30	9.921662	2.48	0.704052	15.08	30	9.930537	2.43	0.760835	16.53
31	.921811	2.48	.704957	15.10	31	.930683	2.45	.761827	16.58
32	.921960	2.48	.705863	15.13	32	.930830	2.43	.762822	16.60
33	.922109	2.48	.706771	15.15	33	.930976	2.45	.763818	16.62
34	.922258	2.48	.707680	15.17	34	.931123	2.43	.764815	16.67
35	9.922407	2.48	0.708590	15.18	35	9.931269	2.45	0.765815	16.68
36	.922556	2.48	.709501	15.22	36	.931416	2.43	.766816	16.72
37	.922705	2.48	.710414	15.23	37	.931562	2.43	.767819	16.73
38	.922854	2.48	.711328	15.25	38	.931708	2.45	.768823	16.77
39	.923003	2.48	.712243	15.28	39	.931855	2.43	.769829	16.80
40	9.923152	2.48	0.713160	15.30	40	9.932001	2.43	0.770837	16.82
41	.923301	2.47	.714078	15.33	41	.932147	2.43	.771846	16.87
42	.923449	2.48	.714998	15.35	42	.932293	2.43	.772858	16.87
43	.923598	2.48	.715919	15.37	43	.932439	2.43	.773870	16.92
44	.923747	2.47	.716841	15.38	44	.932585	2.43	.774885	16.95
45	9.923895	2.48	0.717764	15.42	45	9.932731	2.43	0.775902	16.97
46	.924044	2.47	.718689	15.45	46	.932877	2.43	.776920	17.00
47	.924192	2.48	.719616	15.45	47	.933023	2.43	.777940	17.02
48	.924341	2.47	.720543	15.48	48	.933169	2.43	.778961	17.07
49	.924489	2.47	.721472	15.52	49	.933315	2.42	.779985	17.08
50	9.924637	2.48	0.722403	15.53	50	9.933460	2.43	0.781010	17.12
51	.924786	2.47	.723335	15.55	51	.933606	2.43	.782037	17.13
52	.924934	2.47	.724268	15.58	52	.933752	2.42	.783065	17.18
53	.925082	2.48	.725203	15.60	53	.933897	2.43	.784096	17.20
54	.925231	2.47	.726139	15.63	54	.934043	2.43	.785128	17.23
55	9.925379	2.47	0.727077	15.65	55	9.934189	2.42	0.786162	17.27
56	.925527	2.47	.728016	15.67	56	.934334	2.43	.787198	17.30
57	.925675	2.47	.728956	15.70	57	.934480	2.42	.788236	17.33
58	.925823	2.47	.729898	15.73	58	.934625	2.42	.789276	17.35
59	.925971	2.47	.730842	15.73	59	.934770	2.43	.790317	17.40
60	9.926119		0.731786		60	9.934916		0.791361	

TABLE 57.—*Continued*

LOGARITHMIC VERSED SINES AND EXTERNAL SECANTS

82°					83°				
M.	Vers.	D. 1″.	Exsec.	D. 1″.	M.	Vers.	D. 1″.	Exsec.	D. 1″.
0	9.934916	2.42	0.791361	17.42	0	9.943559	2.38	0.857665	19.55
1	.935061	2.42	.792406	17.45	1	.943702	2.38	.858838	19.58
2	.935206	2.43	.793453	17.48	2	.943845	2.37	.860013	19.63
3	.935352	2.42	.794502	17.50	3	.943987	2.38	.861191	19.67
4	.935497	2.42	.795552	17.55	4	.944130	2.38	.862371	19.72
5	9.935642	2.42	0.796605	17.58	5	9.944273	2.37	0.863554	19.75
6	.935787	2.42	.797660	17.60	6	.944415	2.38	.864739	19.80
7	.935932	2.42	.798716	17.63	7	.944558	2.37	.865927	19.83
8	.936077	2.42	.799774	17.68	8	.944700	2.38	.867117	19.88
9	.936222	2.42	.800835	17.70	9	.944843	2.37	.868310	19.92
10	9.936367	2.42	0.801897	17.73	10	9.944985	2.37	0.869505	19.97
11	.936512	2.42	.802961	17.77	11	.945127	2.38	.870703	20.00
12	.936657	2.40	.804027	17.80	12	.945270	2.37	.871903	20.05
13	.936801	2.42	.805095	17.83	13	.945412	2.37	.873106	20.10
14	.936946	2.42	.806165	17.87	14	.945554	2.37	.874312	20.13
15	9.937091	2.42	0.807237	17.90	15	9.945696	2.37	0.875520	20.18
16	.937236	2.40	.808311	17.93	16	.945838	2.38	.876731	20.23
17	.937380	2.42	.809387	17.97	17	.945981	2.37	.877945	20.27
18	.937525	2.40	.810465	18.00	18	.946123	2.37	.879161	20.30
19	.937669	2.42	.811545	18.03	19	.946265	2.37	.880379	20.37
20	9.937814	2.40	0.812627	18.07	20	9.946407	2.37	0.881601	20.40
21	.937958	2.42	.813711	18.10	21	.946549	2.35	.882825	20.45
22	.938103	2.40	.814797	18.13	22	.946690	2.37	.884052	20.48
23	.938247	2.40	.815885	18.17	23	.946832	2.37	.885281	20.55
24	.938391	2.42	.816975	18.20	24	.946974	2.37	.886514	20.58
25	9.938536	2.40	0.818067	18.23	25	9.947116	2.37	0.887749	20.62
26	.938680	2.40	.819161	18.27	26	.947258	2.35	.888986	20.68
27	.938824	2.40	.820257	18.32	27	.947399	2.37	.890227	20.72
28	.938968	2.40	.821356	18.33	28	.947541	2.37	.891470	20.77
29	.939112	2.42	.822456	18.38	29	.947683	2.35	.892716	20.82
30	9.939257	2.40	0.823559	18.42	30	9.947824	2.37	0.893965	20.87
31	.939401	2.40	.824664	18.43	31	.947966	2.35	.895217	20.92
32	.939545	2.38	.825770	18.48	32	.948107	2.37	.896472	20.95
33	.939688	2.40	.826879	18.52	33	.948249	2.35	.897729	21.00
34	.939832	2.40	.827990	18.57	34	.948390	2.35	.898989	21.07
35	9.939976	2.40	0.829104	18.58	35	9.948531	2.37	0.900253	21.10
36	.940120	2.40	.830219	18.63	36	.948673	2.35	.901519	21.15
37	.940264	2.40	.831337	18.65	37	.948814	2.35	.902788	21.20
38	.940408	2.38	.832456	18.70	38	.948955	2.35	.904060	21.25
39	.940551	2.40	.833578	18.75	39	.949096	2.35	.905335	21.30
40	9.940695	2.40	0.834703	18.77	40	9.949237	2.37	0.906613	21.33
41	.940839	2.38	.835829	18.80	41	.949379	2.35	.907893	21.40
42	.940982	2.40	.836957	18.85	42	.949520	2.35	.909177	21.45
43	.941126	2.38	.838088	18.88	43	.949661	2.35	.910464	21.50
44	.941269	2.40	.839221	18.93	44	.949802	2.35	.911754	21.55
45	9.941413	2.38	0.840357	18.95	45	9.949943	2.33	0.913047	21.60
46	.941556	2.38	.841494	19.00	46	.950083	2.35	.914343	21.65
47	.941699	2.40	.842634	19.03	47	.950224	2.35	.915642	21.70
48	.941843	2.38	.843776	19.08	48	.950365	2.35	.916944	21.75
49	.941986	2.38	.844921	19.12	49	.950506	2.35	.918249	21.82
50	9.942129	2.38	0.846068	19.15	50	9.950647	2.33	0.919558	21.85
51	.942272	2.38	.847217	19.18	51	.950787	2.35	.920869	21.92
52	.942415	2.40	.848368	19.23	52	.950928	2.35	.922184	21.97
53	.942559	2.38	.849522	19.27	53	.951069	2.33	.923502	22.02
54	.942702	2.38	.850678	19.30	54	.951209	2.35	.924823	22.07
55	9.942845	2.38	0.851836	19.35	55	9.951350	2.33	0.926147	22.13
56	.942988	2.38	.852997	19.40	56	.951490	2.35	.927475	22.17
57	.943131	2.37	.854161	19.42	57	.951631	2.33	.928805	22.23
58	.943273	2.38	.855326	19.47	58	.951771	2.33	.930139	22.30
59	.943416	2.38	.856494	19.52	59	.951911	2.35	.931477	22.33
60	9.943559		0.857665		60	9.952052		0.932817	

TABLE 57. — *Continued*

LOGARITHMIC VERSED SINES AND EXTERNAL SECANTS

84°					85°				
M.	Vers.	D. 1″.	Exsec.	D. 1″.	M.	Vers.	D. 1″.	Exsec.	D. 1″.
0	9.952052	2.33	0.932817	22.40	0	9.960397	2.30	1.020101	26.40
1	.952192	2.33	.934161	22.45	1	.960535	2.28	.021685	26.48
2	.952332	2.35	.935508	22.52	2	.960672	2.30	.023274	26.57
3	.952473	2.33	.936859	22.57	3	.960810	2.30	.024868	26.65
4	.952613	2.33	.938213	22.62	4	.960948	2.30	.026467	26.73
5	9.952753	2.33	0.939570	22.68	5	9.961086	2.28	1.028071	26.80
6	.952893	2.33	.940931	22.75	6	.961223	2.30	.029679	26.90
7	.953033	2.33	.942296	22.78	7	.961361	2.28	.031293	26.98
8	.953173	2.33	.943663	22.85	8	.961498	2.30	.032912	27.07
9	.953313	2.33	.945034	22.92	9	.961636	2.28	.034536	27.13
10	9.953453	2.33	0.946409	22.97	10	9.961773	2.30	1.036164	27.23
11	.953593	2.32	.947787	23.03	11	.961911	2.28	.037798	27.33
12	.953732	2.33	.949169	23.08	12	.962048	2.30	.039438	27.40
13	.953872	2.33	.950554	23.15	13	.962186	2.28	.041082	27.50
14	.954012	2.33	.951943	23.22	14	.962323	2.28	.042732	27.58
15	9.954152	2.32	0.953336	23.27	15	9.962460	2.28	1.044387	27.67
16	.954291	2.33	.954732	23.33	16	.962597	2.30	.046047	27.77
17	.954431	2.33	.956132	23.38	17	.962735	2.28	.047713	27.85
18	.954571	2.32	.957535	23.45	18	.962872	2.28	.049384	27.93
19	.954710	2.33	.958942	23.52	19	.963009	2.28	.051060	28.03
20	9.954850	2.32	0.960353	23.57	20	9.963146	2.28	1.052742	28.13
21	.954989	2.33	.961767	23.65	21	.963283	2.28	.054430	28.22
22	.955129	2.32	.963186	23.70	22	.963420	2.28	.056123	28.30
23	.955268	2.32	.964608	23.77	23	.963557	2.28	.057821	28.40
24	.955407	2.33	.966034	23.82	24	.963694	2.28	.059525	28.50
25	9.955547	2.32	0.967463	23.90	25	9.963831	2.28	1.061235	28.60
26	.955686	2.32	.968897	23.95	26	.963968	2.27	.062951	28.68
27	.955825	2.32	.970334	24.02	27	.964104	2.28	.064672	28.78
28	.955964	2.32	.971775	24.10	28	.964241	2.28	.066399	28.88
29	.956103	2.33	.973221	24.15	29	.964378	2.28	.068132	28.98
30	9.956243	2.32	0.974670	24.22	30	9.964515	2.27	1.069871	29.08
31	.956382	2.32	.976123	24.28	31	.964651	2.28	.071616	29.18
32	.956521	2.32	.977580	24.35	32	.964788	2.27	.073367	29.28
33	.956660	2.32	.979041	24.42	33	.964924	2.28	.075124	29.38
34	.956799	2.30	.980506	24.48	34	.965061	2.27	.076887	29.48
35	9.956937	2.32	0.981975	24.55	35	9.965197	2.28	1.078656	29.58
36	.957076	2.32	.983448	24.63	36	.965334	2.27	.080431	29.68
37	.957215	2.32	.984926	24.68	37	.965470	2.28	.082212	29.80
38	.957354	2.32	.986407	24.77	38	.965607	2.27	.084000	29.90
39	.957493	2.30	.987893	24.83	39	.965743	2.27	.085794	30.00
40	9.957631	2.32	0.989383	24.90	40	9.965879	2.28	1.087594	30.12
41	.957770	2.32	.990877	24.97	41	.966016	2.27	.089401	30.22
42	.957909	2.30	.992375	25.03	42	.966152	2.27	.091214	30.32
43	.958047	2.32	.993877	25.12	43	.966288	2.27	.093033	30.43
44	.958186	2.30	.995384	25.18	44	.966424	2.27	.094859	30.55
45	9.958324	2.32	0.996895	25.27	45	9.966560	2.27	1.096692	30.67
46	.958463	2.30	.998411	25.33	46	.966696	2.27	.098532	30.77
47	.958601	2.30	.999931	25.40	47	.966832	2.27	.100378	30.87
48	.958739	2.32	1.001455	25.48	48	.966968	2.27	.102230	31.00
49	.958878	2.30	.002984	25.55	49	.967104	2.27	.104090	31.12
50	9.959016	2.30	1.004517	25.63	50	9.967240	2.27	1.105957	31.22
51	.959154	2.30	.006055	25.70	51	.967376	2.27	.107830	31.35
52	.959292	2.32	.007597	25.78	52	.967512	2.25	.109711	31.45
53	.959431	2.30	.009144	25.85	53	.967647	2.27	.111598	31.58
54	.959569	2.30	.010695	25.93	54	.967783	2.27	.113493	31.68
55	9.959707	2.30	1.012251	26.00	55	9.967919	2.25	1.115394	31.82
56	.959845	2.30	.013811	26.10	56	.968054	2.27	.117303	31.93
57	.959983	2.30	.015377	26.17	57	.968190	2.27	.119219	32.07
58	.960121	2.30	.016947	26.23	58	.968326	2.25	.121143	32.18
59	.960259	2.30	.018521	26.33	59	.968461	2.27	.123074	32.38
60	9.960397		1.020101		60	9.968597		1.125012	

TABLE 57.—*Continued*

LOGARITHMIC VERSED SINES AND EXTERNAL SECANTS

86°					87°				
M.	Vers.	D. 1″.	Exsec.	D. 1″.	M.	Vers.	D. 1″.	Exsec.	D. 1″.
0	9.968597	2.25	1.125012	32.43	0	9.976654	2.23	1.257854	42.52
1	.968732	2.27	.126958	32.55	1	.976788	2.22	.260405	42.73
2	.968868	2.25	.128911	32.70	2	.976921	2.22	.262969	42.95
3	.969003	2.25	.130873	32.80	3	.977054	2.22	.265546	43.20
4	.969138	2.27	.132841	32.95	4	.977187	2.22	.268138	43.42
5	9.969274	2.25	1.134818	33.07	5	9.977320	2.20	1.270743	43.67
6	.969409	2.25	.136802	33.22	6	.977452	2.22	.273363	43.88
7	.969544	2.25	.138795	33.33	7	.977585	2.22	.275996	44.15
8	.969679	2.25	.140795	33.47	8	.977718	2.22	.278645	44.38
9	.969814	2.25	.142803	33.62	9	.977851	2.22	.281308	44.63
10	9.969949	2.25	1.144820	33.73	10	9.977984	2.20	1.283986	44.88
11	.970084	2.25	.146844	33.88	11	.978116	2.22	.286679	45.13
12	.970219	2.25	.148877	34.02	12	.978249	2.22	.289387	45.38
13	.970354	2.25	.150918	34.17	13	.978382	2.20	.292110	45.65
14	.970489	2.25	.152968	34.30	14	.978514	2.22	.294849	45.92
15	9.970624	2.25	1.155026	34.43	15	9.978647	2.20	1.297604	46.17
16	.970759	2.25	.157092	34.60	16	.978779	2.22	.300374	46.45
17	.970894	2.25	.159168	34.73	17	.978912	2.20	.303161	46.72
18	.971029	2.25	.161252	34.87	18	.979044	2.22	.305964	47.00
19	.971164	2.23	.163344	35.03	19	.979177	2.20	.308784	47.27
20	9.971298	2.25	1.165446	35.17	20	9.979309	2.22	1.311620	47.55
21	.971433	2.25	.167556	35.33	21	.979442	2.20	.314473	47.83
22	.971568	2.23	.169676	35.48	22	.979574	2.20	.317343	48.13
23	.971702	2.25	.171805	35.63	23	.979706	2.20	.320231	48.43
24	.971837	2.23	.173943	35.78	24	.979838	2.20	.323137	48.72
25	9.971971	2.25	1.176090	35.93	25	9.979970	2.22	1.326060	49.02
26	.972106	2.23	.178246	36.10	26	.980103	2.20	.329001	49.33
27	.972240	2.23	.180412	36.27	27	.980235	2.20	.331961	49.63
28	.972374	2.25	.182588	36.42	28	.980367	2.20	.334939	49.93
29	.972509	2.23	.184773	36.58	29	.980499	2.20	.337935	50.27
30	9.972643	2.23	1.186968	36.75	30	9.980631	2.20	1.340951	50.58
31	.972777	2.25	.189173	36.90	31	.980763	2.20	.343986	50.92
32	.972912	2.23	.191387	37.08	32	.980895	2.18	.347041	51.23
33	.973046	2.23	.193612	37.25	33	.981026	2.20	.350115	51.58
34	.973180	2.23	.195847	37.42	34	.981158	2.20	.353210	51.92
35	9.973314	2.23	1.198092	37.58	35	9.981290	2.20	1.356325	52.25
36	.973448	2.23	.200347	37.77	36	.981422	2.20	.359460	52.62
37	.973582	2.23	.202613	37.93	37	.981554	2.18	.362617	52.95
38	.973716	2.23	.204889	38.12	38	.981685	2.20	.365794	53.32
39	.973850	2.23	.207176	38.28	39	.981817	2.20	.368993	53.68
40	9.973984	2.23	1.209473	38.47	40	9.981949	2.18	1.372214	54.07
41	.974118	2.23	.211781	38.67	41	.982080	2.20	.375458	54.42
42	.974252	2.23	.214101	38.83	42	.982212	2.18	.378723	54.80
43	.974386	2.22	.216431	39.03	43	.982343	2.20	.382011	55.20
44	.974519	2.23	.218773	39.20	44	.982475	2.18	.385323	55.58
45	9.974653	2.23	1.221125	39.42	45	9.982606	2.18	1.388658	55.97
46	.974787	2.22	.223490	39.58	46	.982737	2.20	.392016	56.38
47	.974920	2.23	.225865	39.80	47	.982869	2.18	.395399	56.80
48	.975054	2.23	.228253	39.98	48	.983000	2.18	.398807	57.20
49	.975188	2.22	.230652	40.18	49	.983131	2.18	.402239	57.62
50	9.975321	2.23	1.233063	40.38	50	9.983262	2.20	1.405696	58.07
51	.975455	2.22	.235486	40.58	51	.983394	2.18	.409180	58.48
52	.975588	2.23	.237921	40.78	52	.983525	2.18	.412689	58.93
53	.975722	2.22	.240368	41.00	53	.983656	2.18	.416225	59.38
54	.975855	2.22	.242828	41.20	54	.983787	2.18	.419788	59.83
55	9.975988	2.23	1.245300	41.42	55	9.983918	2.18	1.423378	60.28
56	.976122	2.22	.247785	41.63	56	.984049	2.18	.426995	60.77
57	.976255	2.22	.250283	41.83	57	.984180	2.18	.430641	61.25
58	.976388	2.22	.252793	42.07	58	.984311	2.18	.434316	61.73
59	.976521	2.22	.255317	42.28	59	.984442	2.18	.438020	62.22
60	9.976654		1.257854		60	9.984573		1.441753	

Table 57. — *Continued*

Logarithmic Versed Sines and External Secants

88°					89°				
M.	Vers.	D. 1″.	Exsec.	D. 1″.	M.	Vers.	D. 1″.	Exsec.	D. 1″.
0	9.984573	2.17	1.441753	62.73	0	9.992354	2.13	1.750498	123.78
1	.984703	2.18	.445517	63.23	1	.992482	2.15	.757925	125.87
2	.984834	2.18	.449311	63.77	2	.992611	2.13	.765477	128.02
3	.984965	2.18	.453137	64.28	3	.992739	2.15	.773158	130.25
4	.985096	2.17	.456994	64.82	4	.992868	2.13	.780973	132.55
5	9.985226	2.18	1.460883	65.37	5	9.992996	2.13	1.788926	134.93
6	.985357	2.17	.464805	65.93	6	.993124	2.15	.797022	137.43
7	.985487	2.18	.468761	66.50	7	.993253	2.13	.805268	140.00
8	.985618	2.17	.472751	67.07	8	.993381	2.13	.813668	142.68
9	.985748	2.18	.476775	67.65	9	.993509	2.13	.822229	145.45
10	9.985879	2.17	1.480834	68.25	10	9.993637	2.13	1.830956	148.37
11	.986009	2.18	.484929	68.87	11	.993765	2.15	.839858	151.37
12	.986140	2.17	.489061	69.48	12	.993894	2.13	.848940	154.52
13	.986270	2.17	.493230	70.12	13	.994022	2.13	.858211	157.80
14	.986400	2.18	.497437	70.77	14	.994150	2.13	.867679	161.20
15	9.986531	2.17	1.501683	71.42	15	9.994278	2.13	1.877351	164.80
16	.986661	2.17	.505968	72.08	16	.994406	2.13	.887239	168.52
17	.986791	2.17	.510293	72.77	17	.994534	2.13	.897350	172.45
18	.986921	2.17	.514659	73.45	18	.994662	2.12	.907697	176.55
19	.987051	2.17	.519066	74.17	19	.994789	2.13	.918290	180.85
20	9.987181	2.17	1.523516	74.90	20	9.994917	2.13	1.929141	185.38
21	.987311	2.17	.528010	75.63	21	.995045	2.13	.940264	190.13
22	.987441	2.17	.532548	76.38	22	.995173	2.13	.951672	195.15
23	.987571	2.17	.537131	77.15	23	.995301	2.12	.963381	200.45
24	.987701	2.17	.541760	77.95	24	.995428	2.13	.975408	206.02
25	9.987831	2.17	1.546437	78.73	25	9.995556	2.12	1.987769	211.93
26	.987961	2.17	.551161	79.57	26	.995683	2.13	2.000485	218.22
27	.988091	2.17	.555935	80.40	27	.995811	2.13	.013578	224.85
28	.988221	2.15	.560759	81.25	28	.995939	2.12	.027069	231.92
29	.988350	2.17	.565634	82.12	29	.996066	2.12	.040984	239.47
30	9.988480	2.17	1.570561	83.02	30	9.996193	2.13	2.055352	247.50
31	.988610	2.15	.575542	83.93	31	.996321	2.12	.070202	256.12
32	.988739	2.17	.580578	84.87	32	.996448	2.13	.085569	265.35
33	.988869	2.15	.585670	85.82	33	.996576	2.12	.101490	275.30
34	.988998	2.17	.590819	86.80	34	.996703	2.12	.118008	286.00
35	9.989128	2.15	1.596027	87.80	35	9.996830	2.12	2.135168	297.60
36	.989257	2.17	.601295	88.83	36	.996957	2.13	.153024	310.17
37	.989387	2.15	.606625	89.88	37	.997085	2.12	.171634	323.87
38	.989516	2.17	.612018	90.95	38	.997212	2.12	.191066	338.83
39	.989646	2.15	.617475	92.05	39	.997339	2.12	.211396	355.27
40	9.989775	2.15	1.622998	93.18	40	9.997466	2.12	2.232712	373.40
41	.989904	2.17	.628589	94.35	41	.997593	2.12	.255116	393.45
42	.990034	2.15	.634250	95.53	42	.997720	2.12	.278723	415.85
43	.990163	2.15	.639982	96.77	43	.997847	2.12	.303674	440.92
44	.990292	2.15	.645788	98.00	44	.997974	2.12	.330129	469.27
45	9.990421	2.15	1.651668	99.30	45	9.998101	2.12	2.358285	501.50
46	.990550	2.15	.657626	100.62	46	.998228	2.12	.388375	538.52
47	.990679	2.15	.663663	101.97	47	.998355	2.10	.420686	581.48
48	.990808	2.15	.669781	103.38	48	.998481	2.12	.455575	631.92
49	.990937	2.15	.675984	104.80	49	.998608	2.12	.493490	691.98
50	9.991066	2.15	1.682272	106.28	50	9.998735	2.12	2.535009	764.73
51	.991195	2.15	.688649	107.80	51	.998862	2.10	.580893	854.65
52	.991324	2.15	.695117	109.37	52	.998988	2.12	.632172	968.65
53	.991453	2.15	.701679	110.98	53	.999115	2.10	.690291	1117.88
54	.991582	2.13	.708338	112.65	54	.999241	2.12	.757364	1321.80
55	9.991710	2.15	1.715097	114.35	55	9.999368	2.10	2.836672	1617.21
56	.991839	2.15	.721958	116.12	56	.999494	2.12	.933708	2084.43
57	.991968	2.13	.728925	117.95	57	.999621	2.10	3.058774	2935.95
58	.992096	2.15	.736002	119.83	58	.999747	2.12	.234991	5019.28
59	.992225	2.15	.743192	121.77	59	.999874	2.10	.536148	
60	9.992354		1.750498		60	0.000000		∞	

TABLE 58

AUXILIARY; VERSED SINES AND EXTERNAL SECANTS OF SMALL ANGLES

M.	0° S.	0° Vers.	0° Exsec.	1° S.	1° Vers.	1° Exsec.	2° S.	2° Vers.	2° Exsec.	M.
		9.07			9.07			9.07		
0	0	0120	0120	3600	0109	0175	7200	0076	0340	0
1	60	0120	0120	3660	0108	0177	7260	0075	0344	1
2	120	0120	0120	3720	0108	0179	7320	0074	0348	2
3	180	0120	0120	3780	0108	0181	7380	0073	0351	3
4	240	0120	0120	3840	0107	0182	7440	0073	0355	4
5	300	0120	0120	3900	0107	0184	7500	0072	0359	5
6	360	0120	0120	3960	0106	0186	7560	0071	0363	6
7	420	0120	0120	4020	0106	0188	7620	0070	0367	7
8	480	0120	0121	4080	0106	0191	7680	0070	0371	8
9	540	0119	0121	4140	0105	0193	7740	0069	0375	9
10	600	0119	0121	4200	0105	0195	7800	0068	0379	10
11	660	0119	0122	4260	0104	0197	7860	0067	0383	11
12	720	0119	0122	4320	0104	0199	7920	0066	0387	12
13	780	0119	0122	4380	0103	0201	7980	0066	0391	13
14	840	0119	0123	4440	0103	0204	8040	0065	0395	14
15	900	0119	0123	4500	0103	0206	8100	0064	0399	15
16	960	0119	0124	4560	0102	0208	8160	0063	0403	16
17	1020	0119	0124	4620	0102	0211	8220	0062	0407	17
18	1080	0119	0125	4680	0101	0213	8280	0061	0411	18
19	1140	0119	0125	4740	0101	0215	8340	0061	0416	19
20	1200	0119	0126	4800	0100	0218	8400	0060	0420	20
21	1260	0118	0126	4860	0100	0220	8460	0059	0424	21
22	1320	0118	0127	4920	0099	0223	8520	0058	0429	22
23	1380	0118	0128	4980	0099	0225	8580	0057	0433	23
24	1440	0118	0129	5040	0098	0228	8640	0056	0437	24
25	1500	0118	0129	5100	0098	0230	8700	0055	0442	25
26	1560	0118	0130	5160	0097	0233	8760	0054	0446	26
27	1620	0118	0131	5220	0097	0236	8820	0054	0451	27
28	1680	0117	0132	5280	0096	0238	8880	0053	0455	28
29	1740	0117	0133	5340	0095	0241	8940	0052	0460	29
30	1800	0117	0134	5400	0095	0244	9000	0051	0464	30
31	1860	0117	0134	5460	0094	0247	9060	0050	0469	31
32	1920	0117	0135	5520	0094	0249	9120	0049	0474	32
33	1980	0116	0136	5580	0093	0252	9180	0048	0478	33
34	2040	0116	0137	5640	0093	0255	9240	0047	0483	34
35	2100	0116	0138	5700	0092	0258	9300	0046	0488	35
36	2160	0116	0140	5760	0092	0261	9360	0045	0493	36
37	2220	0116	0141	5820	0091	0264	9420	0044	0497	37
38	2280	0115	0142	5880	0090	0267	9480	0043	0502	38
39	2340	0115	0143	5940	0090	0270	9540	0042	0507	39
40	2400	0115	0144	6000	0089	0273	9600	0041	0512	40
41	2460	0115	0145	6060	0088	0276	9660	0040	0517	41
42	2520	0114	0147	6120	0088	0279	9720	0039	0522	42
43	2580	0114	0148	6180	0087	0282	9780	0038	0527	43
44	2640	0114	0149	6240	0087	0285	9840	0037	0532	44
45	2700	0114	0151	6300	0086	0289	9900	0036	0537	45
46	2760	0113	0152	6360	0085	0292	9960	0035	0542	46
47	2820	0113	0154	6420	0085	0295	10020	0034	0547	47
48	2880	0113	0155	6480	0084	0298	10080	0033	0552	48
49	2940	0112	0157	6540	0083	0302	10140	0032	0557	49
50	3000	0112	0158	6600	0083	0305	10200	0031	0562	50
51	3060	0112	0160	6660	0082	0308	10260	0030	0568	51
52	3120	0111	0161	6720	0081	0312	10320	0029	0573	52
53	3180	0111	0163	6780	0081	0315	10380	0028	0578	53
54	3240	0111	0164	6840	0080	0319	10440	0027	0584	54
55	3300	0110	0166	6900	0079	0322	10500	0026	0589	55
56	3360	0110	0168	6960	0079	0326	10560	0025	0594	56
57	3420	0110	0169	7020	0078	0329	10620	0024	0600	57
58	3480	0109	0171	7080	0077	0333	10680	0023	0605	58
59	3540	0109	0173	7140	0076	0337	10740	0022	0611	59
M.	S.	Vers.	Exsec.	S.	Vers.	Exsec.	S.	Vers.	Exsec.	M.

TABLE 58. — *Continued*

AUXILIARY; VERSED SINES AND EXTERNAL SECANTS OF SMALL ANGLES

M.	3° S.	3° Vers.	3° Exsec.	4° S.	4° Vers.	4° Exsec.	5° S.	5° Vers.	5° Exsec.	M.
		9.07			9.06	9.07		9.06	9.07	
0	10800	0021	0616	14400	9943	1003	18000	9844	1500	0
1	10860	0019	0622	14460	9942	1010	18060	9842	1509	1
2	10920	0018	0627	14520	9940	1017	18120	9840	1518	2
3	10980	0017	0633	14580	9939	1025	18180	9839	1528	3
4	11040	0016	0638	14640	9937	1032	18240	9837	1537	4
5	11100	0015	0644	14700	9936	1040	18300	9835	1546	5
6	11160	0014	0650	14760	9934	1047	18360	9833	1556	6
7	11220	0013	0655	14820	9933	1055	18420	9831	1565	7
8	11280	0011	0661	14880	9931	1062	18480	9829	1575	8
9	11340	0010	0667	14940	9930	1070	18540	9827	1585	9
10	11400	0009	0673	15000	9928	1078	18600	9825	1594	10
11	11460	0008	0679	15060	9927	1085	18660	9824	1603	11
12	11520	0007	0685	15120	9925	1093	18720	9822	1613	12
13	11580	0006	0690	15180	9924	1101	18780	9820	1622	13
14	11640	0004	0696	15240	9922	1109	18840	9818	1632	14
15	11700	0003	0702	15300	9921	1116	18900	9816	1642	15
16	11760	0002	0708	15360	9919	1124	18960	9814	1651	16
17	11820	0001	0714	15420	9917	1132	19020	9812	1661	17
18	11880	0000	0720	15480	9916	1140	19080	9810	1671	18
19	11940	*9998	0727	15540	9914	1148	19140	9808	1681	19
20	12000	9997	0733	15600	9913	1156	19200	9806	1690	20
21	12060	9996	0739	15660	9911	1164	19260	9804	1700	21
22	12120	9995	0745	15720	9910	1172	19320	9802	1710	22
23	12180	9994	0751	15780	9908	1180	19380	9800	1720	23
24	12240	9992	0757	15840	9906	1188	19440	9798	1730	24
25	12300	9991	0764	15900	9905	1196	19500	9796	1740	25
26	12360	9990	0770	15960	9903	1204	19560	9794	1750	26
27	12420	9989	0776	16020	9901	1213	19620	9792	1760	27
28	12480	9987	0783	16080	9900	1221	19680	9790	1770	28
29	12540	9986	0789	16140	9898	1229	19740	9788	1780	29
30	12600	9985	0795	16200	9896	1237	19800	9786	1790	30
31	12660	9983	0802	16260	9895	1246	19860	9784	1800	31
32	12720	9982	0808	16320	9893	1254	19920	9782	1811	32
33	12780	9981	0815	16380	9891	1262	19980	9780	1821	33
34	12840	9979	0821	16440	9890	1271	20040	9778	1831	34
35	12900	9978	0828	16500	9888	1279	20100	9776	1841	35
36	12960	9977	0835	16560	9886	1288	20160	9774	1852	36
37	13020	9976	0841	16620	9885	1296	20220	9772	1862	37
38	13080	9974	0848	16680	9883	1305	20280	9770	1872	38
39	13140	9973	0855	16740	9881	1313	20340	9768	1883	39
40	13200	9972	0861	16800	9880	1322	20400	9766	1893	40
41	13260	9970	0868	16860	9878	1330	20460	9764	1904	41
42	13320	9969	0875	16920	9876	1339	20520	9762	1914	42
43	13380	9967	0882	16980	9874	1348	20580	9759	1925	43
44	13440	9966	0889	17040	9873	1356	20640	9757	1935	44
45	13500	9965	0896	17100	9871	1365	20700	9755	1946	45
46	13560	9963	0902	17160	9869	1374	20760	9753	1956	46
47	13620	9962	0909	17220	9867	1383	20820	9751	1967	47
48	13680	9961	0916	17280	9866	1392	20880	9749	1978	48
49	13740	9959	0923	17340	9864	1400	20940	9747	1988	49
50	13800	9958	0930	17400	9862	1409	21000	9745	1999	50
51	13860	9956	0938	17460	9860	1418	21060	9742	2010	51
52	13920	9955	0945	17520	9859	1427	21120	9740	2021	52
53	13980	9953	0952	17580	9857	1436	21180	9738	2032	53
54	14040	9952	0959	17640	9855	1445	21240	9736	2043	54
55	14100	9951	0966	17700	9853	1454	21300	9734	2053	55
56	14160	9949	0973	17760	9851	1463	21360	9732	2064	56
57	14220	9948	0981	17820	9850	1472	21420	9729	2075	57
58	14280	9946	0988	17880	9848	1482	21480	9727	2086	58
59	14340	9945	0995	17940	9846	1491	21540	9725	2097	59
		9.06*								
M.	S.	Vers.	Exsec.	S.	Vers.	Exsec.	S.	Vers.	Exsec.	M.

TABLE 59

NATURAL SINES AND COSINES

M.	0° Sin.	0° Cos.	1° Sin.	1° Cos.	2° Sin.	2° Cos.	3° Sin.	3° Cos.	4° Sin.	4° Cos.	
0	.00000	1.0000	01745	.99985	.03490	.99939	.05234	.99863	.06976	.99756	60
1	029	000	774	984	519	938	263	861	.07005	754	59
2	058	000	803	984	548	937	292	860	034	752	58
3	087	000	832	983	577	936	321	858	063	750	57
4	116	000	862	983	606	935	350	857	092	748	56
5	.00145	1.0000	.01891	.99982	.03635	.99934	.05379	.99855	.07121	.99746	55
6	175	000	920	982	664	933	408	854	150	744	54
7	204	000	949	981	693	932	437	852	179	742	53
8	233	000	978	980	723	931	466	851	208	740	52
9	262	000	.02007	980	752	930	495	849	237	738	51
10	.00291	1.0000	.02036	.99979	.03781	.99929	.05524	.99847	.07266	.99736	50
11	320	.99999	065	979	810	927	553	846	295	734	49
12	349	999	094	978	839	926	582	844	324	731	48
13	378	999	123	977	868	925	611	842	353	729	47
14	407	999	152	977	897	924	640	841	382	727	46
15	.00436	.99999	.02181	.99976	.03926	.99923	.05669	.99839	.07411	.99725	45
16	465	999	211	976	955	922	698	838	440	723	44
17	495	999	240	975	984	921	727	836	469	721	43
18	524	999	269	974	.04013	919	756	834	498	719	42
19	553	998	298	974	042	918	785	833	527	716	41
20	.00582	.99998	.02327	.99973	.04071	.99917	.05814	.99831	.07556	.99714	40
21	611	998	356	972	100	916	844	829	585	712	39
22	640	998	385	972	129	915	873	827	614	710	38
23	669	998	414	971	159	913	902	826	643	708	37
24	698	998	443	970	188	912	931	824	672	705	36
25	.00727	.99997	.02472	.99969	.04217	.99911	.05960	.99822	.07701	.99703	35
26	756	997	501	969	246	910	989	821	730	701	34
27	785	997	530	968	275	909	.06018	819	759	699	33
28	814	997	560	967	304	907	047	817	788	696	32
29	844	996	589	966	333	906	076	815	817	694	31
30	.00873	.99996	.02618	.99966	.04362	.99905	.06105	.99813	.07846	.99692	30
31	902	996	647	965	391	904	134	812	875	689	29
32	931	996	676	964	420	902	163	810	904	687	28
33	960	995	705	963	449	901	192	808	933	685	27
34	989	995	734	963	478	900	221	806	962	683	26
35	.01018	.99995	.02763	.99962	.04507	.99898	.06250	.99804	.07991	.99680	25
36	047	995	792	961	536	897	279	803	.08020	678	24
37	076	994	821	960	565	896	308	801	049	676	23
38	105	994	850	959	594	894	337	799	078	673	22
39	134	994	879	959	623	893	366	797	107	671	21
40	.01164	.99993	.02908	.99958	.04653	.99892	.06395	.99795	.08136	.99668	20
41	193	993	938	957	682	890	424	793	165	666	19
42	222	993	967	956	711	889	453	792	194	664	18
43	251	992	996	955	740	888	482	790	223	661	17
44	280	992	.03025	954	769	886	511	788	252	659	16
45	.01309	.99991	.03054	.99953	.04798	.99885	.06540	.99786	.08281	.99657	15
46	338	991	083	952	827	883	569	784	310	654	14
47	367	991	112	952	856	882	598	782	339	652	13
48	396	990	141	951	885	881	627	780	368	649	12
49	425	990	170	950	914	879	656	778	397	647	11
50	.01454	.99989	.03199	.99949	.04943	.99878	.06685	.99776	.08426	.99644	10
51	483	989	228	948	972	876	714	774	455	642	9
52	513	989	257	947	.05001	875	743	772	484	639	8
53	542	988	286	946	030	873	773	770	513	637	7
54	571	988	316	945	059	872	802	768	542	635	6
55	.01600	.99987	.03345	.99944	.05088	.99870	.06831	.99766	.08571	.99632	5
56	629	987	374	943	117	869	860	764	600	630	4
57	658	986	403	942	146	867	889	762	629	627	3
58	687	986	432	941	175	866	918	760	658	625	2
59	716	985	461	940	205	864	947	758	687	622	1
60	.01745	.99985	.03490	.99939	.05234	.99863	.06976	.99756	.08716	.99619	0
	Cos.	Sin.	Cos.	Sin.	Cos.	Sin.	Cos.	Sin.	Cos.	Sin.	M.
	89°		88°		87°		86°		85°		

TABLE 59. — *Continued*

NATURAL SINES AND COSINES

M.	5° Sin.	5° Cos.	6° Sin.	6° Cos.	7° Sin.	7° Cos.	8° Sin.	8° Cos.	9° Sin.	9° Cos.	
0	.08716	.99619	.10453	.99452	.12187	.99255	.13917	.99027	.15643	.98769	60
1	745	617	482	449	216	251	946	023	672	764	59
2	774	614	511	446	245	248	975	019	701	760	58
3	803	612	540	443	274	244	.14004	015	730	755	57
4	831	609	569	440	302	240	033	011	758	751	56
5	.08860	.99607	.10597	.99437	.12331	.99237	.14061	.99006	.15787	.98746	55
6	889	604	626	434	360	233	090	002	816	741	54
7	918	602	655	431	389	230	119	.98998	845	737	53
8	947	599	684	428	418	226	148	994	873	732	52
9	976	596	713	424	447	222	177	990	902	728	51
10	.09005	.99594	.10742	.99421	.12476	.99219	.14205	.98986	.15931	.98723	50
11	034	591	771	418	504	215	234	982	959	718	49
12	063	588	800	415	533	211	263	978	988	714	48
13	092	586	829	412	562	208	292	973	.16017	709	47
14	121	583	858	409	591	204	320	969	046	704	46
15	.09150	.99580	.10887	.99406	.12620	.99200	.14349	.98965	.16074	.98700	45
16	179	578	916	402	649	197	378	961	103	695	44
17	208	575	945	399	678	193	407	957	132	690	43
18	237	572	973	396	706	189	436	953	160	686	42
19	266	570	.11002	393	735	186	464	948	189	681	41
20	.09295	.99567	.11031	.99390	.12764	.99182	.14493	.98944	.16218	.98676	40
21	324	564	060	386	793	178	522	940	246	671	39
22	353	562	089	383	822	175	551	936	275	667	38
23	382	559	118	380	851	171	580	931	304	662	37
24	411	556	147	377	880	167	608	927	333	657	36
25	.09440	.99553	.11176	.99374	.12908	.99163	.14637	.98923	.16361	.98652	35
26	469	551	205	370	937	160	666	919	390	648	34
27	498	548	234	367	966	156	695	914	419	643	33
28	527	545	263	364	995	152	723	910	447	638	32
29	556	542	291	360	.13024	148	752	906	476	633	31
30	.09585	.99540	.11320	.99357	.13053	.99144	.14781	.98902	.16505	.98629	30
31	614	537	349	354	081	141	810	897	533	624	29
32	642	534	378	351	110	137	838	893	562	619	28
33	671	531	407	347	139	133	867	889	591	614	27
34	700	528	436	344	168	129	896	884	620	609	26
35	.09729	.99526	.11465	.99341	.13197	.99125	.14925	.98880	.16648	.98604	25
36	758	523	494	337	226	122	954	876	677	600	24
37	787	520	523	334	254	118	982	871	706	595	23
38	816	517	552	331	283	114	.15011	867	734	590	22
39	845	514	580	327	312	110	040	863	763	585	21
40	.09874	.99511	.11609	.99324	.13341	.99106	.15069	.98858	.16792	.98580	20
41	903	508	638	320	370	102	097	854	820	575	19
42	932	506	667	317	399	098	126	849	849	570	18
43	961	503	696	314	427	094	155	845	878	565	17
44	990	500	725	310	456	091	184	841	906	561	16
45	.10019	.99497	.11754	.99307	.13485	.99087	.15212	.98836	.16935	.98556	15
46	048	494	783	303	514	083	241	832	964	551	14
47	077	491	812	300	543	079	270	827	992	546	13
48	106	488	840	297	572	075	299	823	.17021	541	12
49	135	485	869	293	600	071	327	818	050	536	11
50	.10164	.99482	.11898	.99290	.13629	.99067	.15356	.98814	.17078	.98531	10
51	192	479	927	286	658	063	385	809	107	526	9
52	221	476	956	283	687	059	414	805	136	521	8
53	250	473	985	279	716	055	442	800	164	516	7
54	279	470	.12014	276	744	051	471	796	193	511	6
55	.10308	.99467	.12043	.99272	.13773	.99047	.15500	.98791	.17222	.98506	5
56	337	464	071	269	802	043	529	787	250	501	4
57	366	461	100	265	831	039	557	782	279	496	3
58	395	458	129	262	860	035	586	778	308	491	2
59	424	455	158	258	889	031	615	773	336	486	1
60	.10453	.99452	.12187	.99255	.13917	.99027	.15643	.98769	.17365	.98481	0
	Cos.	Sin.	Cos.	Sin.	Cos.	Sin.	Cos.	Sin.	Cos.	Sin	
	84°		83°		82°		81°		80°		

TABLE 59.—*Continued*

NATURAL SINES AND COSINES

M.	10° Sin.	10° Cos.	11° Sin.	11° Cos.	12° Sin.	12° Cos.	13° Sin.	13° Cos.	14° Sin.	14° Cos.	
0	.17365	.98481	.19081	.98163	.20791	.97815	.22495	.97437	.24192	.97030	60
1	393	476	109	157	820	809	523	430	220	023	59
2	422	471	138	152	848	803	552	424	249	015	58
3	451	466	167	146	877	797	580	417	277	008	57
4	479	461	195	140	905	791	608	411	305	001	56
5	.17508	.98455	.19224	.98135	.20933	.97784	.22637	.97404	.24333	.96994	55
6	537	450	252	129	962	778	665	398	362	987	54
7	565	445	281	124	990	772	693	391	390	980	53
8	594	440	309	118	.21019	766	722	384	418	973	52
9	623	435	338	112	047	760	750	378	446	966	51
10	.17651	.98430	.19366	.98107	.21076	.97754	.22778	.97371	.24474	.96959	50
11	680	425	395	101	104	748	807	365	503	952	49
12	708	420	423	096	132	742	835	358	531	945	48
13	737	414	452	090	161	735	863	351	559	937	47
14	766	409	481	084	189	729	892	345	587	930	46
15	.17794	.98404	.19509	.98079	.21218	.97723	.22920	.97338	.24615	.96923	45
16	823	399	538	073	246	717	948	331	644	916	44
17	852	394	566	067	275	711	977	325	672	909	43
18	880	389	595	061	303	705	.23005	318	700	902	42
19	909	383	623	056	331	698	033	311	728	894	41
20	.17937	.98378	.19652	.98050	.21360	.97692	.23062	.97304	.24756	.96887	40
21	966	373	680	044	388	686	090	298	784	880	39
22	995	368	709	039	417	680	118	291	813	873	38
23	.18023	362	737	033	445	673	146	284	841	866	37
24	052	357	766	027	474	667	175	278	869	858	36
25	.18081	.98352	.19794	.98021	.21502	.97661	.23203	.97271	.24897	.96851	35
26	109	347	823	016	530	655	231	264	925	844	34
27	138	341	851	010	559	648	260	257	954	837	33
28	166	336	880	004	587	642	288	251	982	829	32
29	195	331	908	.97998	616	636	316	244	.25010	822	31
30	.18224	.98325	.19937	.97992	.21644	.97630	.23345	.97237	.25038	.96815	30
31	252	320	965	987	672	623	373	230	066	807	29
32	281	315	994	981	701	617	401	223	094	800	28
33	309	310	.20022	975	729	611	429	217	122	793	27
34	338	304	051	969	758	604	458	210	151	786	26
35	.18367	.98299	.20079	.97963	.21786	.97598	.23486	.97203	.25179	.96778	25
36	395	294	108	958	814	592	514	196	207	771	24
37	424	288	136	952	843	585	542	189	235	764	23
38	452	283	165	946	871	579	571	182	263	756	22
39	481	277	193	940	899	573	599	176	291	749	21
40	.18509	.98272	.20222	.97934	.21928	.97566	.23627	.97169	.25320	.96742	20
41	538	267	250	928	956	560	656	162	348	734	19
42	567	261	279	922	985	553	684	155	376	727	18
43	595	256	307	916	.22013	547	712	148	404	719	17
44	624	250	336	910	041	541	740	141	432	712	16
45	.18652	.98245	.20364	.97905	.22070	.97534	.23769	.97134	.25460	.96705	15
46	681	240	393	899	098	528	797	127	488	697	14
47	710	234	421	893	126	521	825	120	516	690	13
48	738	229	450	887	155	515	853	113	545	682	12
49	767	223	478	881	183	508	882	106	573	675	11
50	.18795	.98218	.20507	.97875	.22212	.97502	.23910	.97100	.25601	.96667	10
51	824	212	535	869	240	496	938	093	629	660	9
52	852	207	563	863	268	489	966	086	657	653	8
53	881	201	592	857	297	483	995	079	685	645	7
54	910	196	620	851	325	476	.24023	072	713	638	6
55	.18938	.98190	.20649	.97845	.22353	.97470	.24051	.97065	.25741	.96630	5
56	967	185	677	839	382	463	079	058	769	623	4
57	995	179	706	833	410	457	108	051	798	615	3
58	.19024	174	734	827	438	450	136	044	826	608	2
59	052	168	763	821	467	444	164	037	854	600	1
60	.19081	.98163	.20791	.97815	.22495	.97437	.24192	.97030	.25882	.96593	0
	Cos.	Sin.	Cos.	Sin.	Cos.	Sin.	Cos.	Sin.	Cos.	Sin.	M.
	79°		78°		77°		76°		75°		

TABLE 59. — *Continued*

NATURAL SINES AND COSINES

M.	15° Sin.	15° Cos.	16° Sin.	16° Cos.	17° Sin.	17° Cos.	18° Sin.	18° Cos.	19° Sin.	19° Cos.	
0	.25882	.96593	.27564	.96126	.29237	.95630	.30902	.95106	.32557	.94552	60
1	910	585	592	118	265	622	929	097	584	542	59
2	938	578	620	110	293	613	957	088	612	533	58
3	966	570	648	102	321	605	985	079	639	523	57
4	994	562	676	094	348	596	.31012	070	667	514	56
5	.26022	.96555	.27704	.96086	.29376	.95588	.31040	.95061	.32694	.94504	55
6	050	547	731	078	404	579	068	052	722	495	54
7	079	540	759	070	432	571	095	043	749	485	53
8	107	532	787	062	460	562	123	033	777	476	52
9	135	524	815	054	487	554	151	024	804	466	51
10	.26163	.96517	.27843	.96046	.29515	.95545	.31178	.95015	.32832	.94457	50
11	191	509	871	037	543	536	206	006	859	447	49
12	219	502	899	029	571	528	233	.94997	887	438	48
13	247	494	927	021	599	519	261	988	914	428	47
14	275	486	955	013	626	511	289	979	942	418	46
15	.26303	.96479	.27983	.96005	.29654	.95502	.31316	.94970	.32969	.94409	45
16	331	471	.28011	.95997	682	493	344	961	997	399	44
17	359	463	039	989	710	485	372	952	.33024	390	43
18	387	456	067	981	737	476	399	943	051	380	42
19	415	448	095	972	765	467	427	933	079	370	41
20	.26443	.96440	.28123	.95964	.29793	.95459	.31454	.94924	.33106	.94361	40
21	471	433	150	956	821	450	482	915	134	351	39
22	500	425	178	948	849	441	510	906	161	342	38
23	528	417	206	940	876	433	537	897	189	332	37
24	556	410	234	931	904	424	565	888	216	322	36
25	.26584	.96402	.28262	.95923	.29932	.95415	.31593	.94878	.33244	.94313	35
26	612	394	290	915	960	407	620	869	271	303	34
27	640	386	318	907	987	398	648	860	298	293	33
28	668	379	346	898	.30015	389	675	851	326	284	32
29	696	371	374	890	043	380	703	842	353	274	31
30	.26724	.96363	.28402	.95882	.30071	.95372	.31730	.94832	.33381	.94264	30
31	752	355	429	874	098	363	758	823	408	254	29
32	780	347	457	865	126	354	786	814	436	245	28
33	808	340	485	857	154	345	813	805	463	235	27
34	836	332	513	849	182	337	841	795	490	225	26
35	.26864	.96324	.28541	.95841	.30209	.95328	.31868	.94786	.33518	.94215	25
36	892	316	569	832	237	319	896	777	545	206	24
37	920	308	597	824	265	310	923	768	573	196	23
38	948	301	625	816	292	301	951	758	600	186	22
39	976	293	652	807	320	293	979	749	627	176	21
40	.27004	.96285	.28680	.95799	.30348	.95284	.32006	.94740	.33655	.94167	20
41	032	277	708	791	376	275	034	730	682	157	19
42	060	269	736	782	403	266	061	721	710	147	18
43	088	261	764	774	431	257	089	712	737	137	17
44	116	253	792	766	459	248	116	702	764	127	16
45	.27144	.96246	.28820	.95757	.30486	.95240	.32144	.94693	.33792	.94118	15
46	172	238	847	749	514	231	171	684	819	108	14
47	200	230	875	740	542	222	199	674	846	098	13
48	228	222	903	732	570	213	227	665	874	088	12
49	256	214	931	724	597	204	254	656	901	078	11
50	.27284	.96206	.28959	.95715	.30625	.95195	.32282	.94646	.33929	.94068	10
51	312	198	987	707	653	186	309	637	956	058	9
52	340	190	.29015	698	680	177	337	627	983	049	8
53	368	182	042	690	708	168	364	618	.34011	039	7
54	396	174	070	681	736	159	392	609	038	029	6
55	.27424	.96166	.29098	.95673	.30763	.95150	.32419	.94599	.34065	.94019	5
56	452	158	126	664	791	142	447	590	093	009	4
57	480	150	154	656	819	133	474	580	120	.93999	3
58	508	142	182	647	846	124	502	571	147	989	2
59	536	134	209	639	874	115	529	561	175	979	1
60	.27564	.96126	.29237	.95630	.30902	.95106	.32557	.94552	.34202	.93969	0
	Cos.	Sin.	Cos.	Sin.	Cos.	Sin.	Cos.	Sin.	Cos.	Sin.	M.
	74°		73°		72°		71°		70°		

TABLE 59.—*Continued*

NATURAL SINES AND COSINES

M.	20° Sin.	20° Cos.	21° Sin.	21° Cos.	22° Sin.	22° Cos.	23° Sin.	23° Cos.	24° Sin.	24° Cos.	
0	.34202	.93969	.35837	.93358	.37461	.92718	.39073	.92050	.40674	.91355	60
1	229	959	864	348	488	707	100	039	700	343	59
2	257	949	891	337	515	697	127	028	727	331	58
3	284	939	918	327	542	686	153	016	753	319	57
4	311	929	945	316	569	675	180	005	780	307	56
5	.34339	.93919	.35973	.93306	.37595	.92664	.39207	.91994	.40806	.91295	55
6	366	909	.36000	295	622	653	234	982	833	283	54
7	393	899	027	285	649	642	260	971	860	272	53
8	421	889	054	274	676	631	287	959	886	260	52
9	448	879	081	264	703	620	314	948	913	248	51
10	.34475	.93869	.36108	.93253	.37730	.92609	.39341	.91936	.40939	.91236	50
11	503	859	135	243	757	598	367	925	966	224	49
12	530	849	162	232	784	587	394	914	992	212	48
13	557	839	190	222	811	576	421	902	.41019	200	47
14	584	829	217	211	838	565	448	891	045	188	46
15	.34612	.93819	.36244	.93201	.37865	.92554	.39474	.91879	.41072	.91176	45
16	639	809	271	190	892	543	501	868	098	164	44
17	666	799	298	180	919	532	528	856	125	152	43
18	694	789	325	169	946	521	555	845	151	140	42
19	721	779	352	159	973	510	581	833	178	128	41
20	.34748	.93769	.36379	.93148	.37999	.92499	.39608	.91822	.41204	.91116	40
21	775	759	406	137	.38026	488	635	810	231	104	39
22	803	748	434	127	053	477	661	799	257	092	38
23	830	738	461	116	080	466	688	787	284	080	37
24	857	728	488	106	107	455	715	775	310	068	36
25	.34884	.93718	.36515	.93095	.38134	.92444	.39741	.91764	.41337	.91056	35
26	912	708	542	084	161	432	768	752	363	044	34
27	939	698	569	074	188	421	795	741	390	032	33
28	966	688	596	063	215	410	822	729	416	020	32
29	993	677	623	052	241	399	848	718	443	008	31
30	.35021	.93667	.36650	.93042	.38268	.92388	.39875	.91706	.41469	.90996	30
31	048	657	677	031	295	377	902	694	496	984	29
32	075	647	704	020	322	366	928	683	522	972	28
33	102	637	731	010	349	355	955	671	549	960	27
34	130	626	758	.92999	376	343	982	660	575	948	26
35	.35157	.93616	.36785	.92988	.38403	.92332	.40008	.91648	.41602	.90936	25
36	184	606	812	978	430	321	035	636	628	924	24
37	211	596	839	967	456	310	062	625	655	911	23
38	239	585	867	956	483	299	088	613	681	899	22
39	266	575	894	945	510	287	115	601	707	887	21
40	.35293	.93565	.36921	.92935	.38537	.92276	.40141	.91590	.41734	.90875	20
41	320	555	948	924	564	265	168	578	760	863	19
42	347	544	975	913	591	254	195	566	787	851	18
43	375	534	.37002	902	617	243	221	555	813	839	17
44	402	524	029	892	644	231	248	543	840	826	16
45	.35429	.93514	.37056	.92881	.38671	.92220	.40275	.91531	.41866	.90814	15
46	456	503	083	870	698	209	301	519	892	802	14
47	484	493	110	859	725	198	328	508	919	790	13
48	511	483	137	849	752	186	355	496	945	778	12
49	538	472	164	838	778	175	381	484	972	766	11
50	.35565	.93462	.37191	.92827	.38805	.92164	.40408	.91472	.41998	.90753	10
51	592	452	218	816	832	152	434	461	.42024	741	9
52	619	441	245	805	859	141	461	449	051	729	8
53	647	431	272	794	886	130	488	437	077	717	7
54	674	420	299	784	912	119	514	425	104	704	6
55	.35701	.93410	.37326	.92773	.38939	.92107	.40541	.91414	.42130	.90692	5
56	728	400	353	762	966	096	567	402	156	680	4
57	755	389	380	751	993	085	594	390	183	668	3
58	782	379	407	740	.39020	073	621	378	209	655	2
59	810	368	434	729	046	062	647	366	235	643	1
60	.35837	.93358	.37461	.92718	.39073	.92050	.40674	.91355	.42262	.90631	0
	Cos.	Sin.	Cos.	Sin.	Cos.	Sin.	Cos.	Sin.	Cos.	Sin.	
	69°		68°		67°		66°		65°		M.

TABLE 59.—*Continued*

NATURAL SINES AND COSINES

25°		26°		27°		28°		29°		
Sin.	Cos.	Sin.	Cos.	Sin.	Cos.	Sin.	Cos.	Sin.	Cos.	
.42262	.90631	.43837	.89879	.45399	.89101	.46947	.88295	.48481	.87462	60
288	618	863	867	425	087	973	281	506	448	59
315	606	889	854	451	074	999	267	532	434	58
341	594	916	841	477	061	.47024	254	557	420	57
367	582	942	828	503	048	050	240	583	406	56
.42394	.90569	.43968	.89816	.45529	.89035	.47076	.88226	.48608	.87391	55
420	557	994	803	554	021	101	213	634	377	54
446	545	.44020	790	580	008	127	199	659	363	53
473	532	046	777	606	.88995	153	185	684	349	52
499	520	072	764	632	981	178	172	710	335	51
.42525	.90507	.44098	.89752	.45658	.88968	.47204	.88158	.48735	.87321	50
552	495	124	739	684	955	229	144	761	306	49
578	483	151	726	710	942	255	130	786	292	48
604	470	177	713	736	928	281	117	811	278	47
631	458	203	700	762	915	306	103	837	264	46
.42657	.90446	.44229	.89687	.45787	.88902	.47332	.88089	.48862	.87250	45
683	433	255	674	813	888	358	075	888	235	44
709	421	281	662	839	875	383	062	913	221	43
736	408	307	649	865	862	409	048	938	207	42
762	396	333	636	891	848	434	034	964	193	41
.42788	.90383	.44359	.89623	.45917	.88835	.47460	.88020	.48989	.87178	40
815	371	385	610	942	822	486	006	.49014	164	39
841	358	411	597	968	808	511	.87993	040	150	38
867	346	437	584	994	795	537	979	065	136	37
894	334	464	571	.46020	782	562	965	090	121	36
.42920	.90321	.44490	.89558	.46046	.88768	.47588	.87951	.49116	.87107	35
946	309	516	545	072	755	614	937	141	093	34
972	296	542	532	097	741	639	923	166	079	33
999	284	568	519	123	728	665	909	192	064	32
.43025	271	594	506	149	715	690	896	217	050	31
.43051	.90259	.44620	.89493	.46175	.88701	.47716	.87882	.49242	.87036	30
077	246	646	480	201	688	741	868	268	021	29
104	233	672	467	226	674	767	854	293	007	28
130	221	698	454	252	661	793	840	318	.86993	27
156	208	724	441	278	647	818	826	344	978	26
.43182	.90196	.44750	.89428	.46304	.88634	.47844	.87812	.49369	.86964	25
209	183	776	415	330	620	869	798	394	949	24
235	171	802	402	355	607	895	784	419	935	23
261	158	828	389	381	593	920	770	445	921	22
287	146	854	376	407	580	946	756	470	906	21
.43313	.90133	.44880	.89363	.46433	.88566	.47971	.87743	.49495	.86892	20
340	120	906	350	458	553	997	729	521	878	19
366	108	932	337	484	539	.48022	715	546	863	18
392	095	958	324	510	526	048	701	571	849	17
418	082	984	311	536	512	073	687	596	834	16
.43445	.90070	.45010	.89298	.46561	.88499	.48099	.87673	.49622	.86820	15
471	057	036	285	587	485	124	659	647	805	14
497	045	062	272	613	472	150	645	672	791	13
523	032	088	259	639	458	175	631	697	777	12
549	019	114	245	664	445	201	617	723	762	11
.43575	.90007	.45140	.89232	.46690	.88431	.48226	.87603	.49748	.86748	10
602	.89994	166	219	716	417	252	589	773	733	9
628	981	192	206	742	404	277	575	798	719	8
654	968	218	193	767	390	303	561	824	704	7
680	956	243	180	793	377	328	546	849	690	6
.43706	.89943	.45269	.89167	.46819	.88363	.48354	.87532	.49874	.86675	5
733	930	295	153	844	349	379	518	899	661	4
759	918	321	140	870	336	405	504	924	646	3
785	905	347	127	896	322	430	490	950	632	2
811	892	373	114	921	308	456	476	975	617	1
.43837	.89879	.45399	.89101	.46947	.88295	.48481	.87462	.50000	.86603	0
Cos.	Sin.	Cos.	Sin.	Cos.	Sin.	Cos.	Sin.	Cos.	Sin.	M.
64°		63°		62°		61°		60°		

TABLE 59.—*Continued*

NATURAL SINES AND COSINES

M.	30° Sin.	30° Cos.	31° Sin.	31° Cos.	32° Sin.	32° Cos.	33° Sin.	33° Cos.	34° Sin.	34° Cos.	
0	.50000	.86603	.51504	.85717	.52992	.84805	.54464	.83867	.55919	.82904	60
1	025	588	529	702	.53017	789	488	851	943	887	59
2	050	573	554	687	041	774	513	835	968	871	58
3	076	559	579	672	066	759	537	819	992	855	57
4	101	544	604	657	091	743	561	804	.56016	839	56
5	.50126	.86530	.51628	.85642	.53115	.84728	.54586	.83788	.56040	.82822	55
6	151	515	653	627	140	712	610	772	064	806	54
7	176	501	678	612	164	697	635	756	088	790	53
8	201	486	703	597	189	681	659	740	112	773	52
9	227	471	728	582	214	666	683	724	136	757	51
10	.50252	.86457	.51753	.85567	.53238	.84650	.54708	.83708	.56160	.82741	50
11	277	442	778	551	263	635	732	692	184	724	49
12	302	427	803	536	288	619	756	676	208	708	48
13	327	413	828	521	312	604	781	660	232	692	47
14	352	398	852	506	337	588	805	645	256	675	46
15	.50377	.86384	.51877	.85491	.53361	.84573	.54829	.83629	.56280	.82659	45
16	403	369	902	476	386	557	854	613	305	643	44
17	428	354	927	461	411	542	878	597	329	626	43
18	453	340	952	446	435	526	902	581	353	610	42
19	478	325	977	431	460	511	927	565	377	593	41
20	.50503	.86310	.52002	.85416	.53484	.84495	.54951	.83549	.56401	.82577	40
21	528	295	026	401	509	480	975	533	425	561	39
22	553	281	051	385	534	464	999	517	449	544	38
23	578	266	076	370	558	448	.55024	501	473	528	37
24	603	251	101	355	583	433	048	485	497	511	36
25	.50628	.86237	.52126	.85340	.53607	.84417	.55072	.83469	.56521	.82495	35
26	654	222	151	325	632	402	097	453	545	478	34
27	679	207	175	310	656	386	121	437	569	462	33
28	704	192	200	294	681	370	145	421	593	446	32
29	729	178	225	279	705	355	169	405	617	429	31
30	.50754	.86163	.52250	.85264	.53730	.84339	.55194	.83389	.56641	.82413	30
31	779	148	275	249	754	324	218	373	665	396	29
32	804	133	299	234	779	308	242	356	689	380	28
33	829	119	324	218	804	292	266	340	713	363	27
34	854	104	349	203	828	277	291	324	736	347	26
35	.50879	.86089	.52374	.85188	.53853	.84261	.55315	.83308	.56760	.82330	25
36	904	074	399	173	877	245	339	292	784	314	24
37	929	059	423	157	902	230	363	276	808	297	23
38	954	045	448	142	926	214	388	260	832	281	22
39	979	030	473	127	951	198	412	244	856	264	21
40	.51004	.86015	.52498	.85112	.53975	.84182	.55436	.83228	.56880	.82248	20
41	029	000	522	096	.54000	167	460	212	904	231	19
42	054	.85985	547	081	024	151	484	195	928	214	18
43	079	970	572	066	049	135	509	179	952	198	17
44	104	956	597	051	073	120	533	163	976	181	16
45	.51129	.85941	.52621	.85035	.54097	.84104	.55557	.83147	.57000	.82165	15
46	154	926	646	020	122	088	581	131	024	148	14
47	179	911	671	005	146	072	605	115	047	132	13
48	204	896	696	.84989	171	057	630	098	071	115	12
49	229	881	720	974	195	041	654	082	095	098	11
50	.51254	.85866	.52745	.84959	.54220	.84025	.55678	.83066	.57119	.82082	10
51	279	851	770	943	244	009	702	050	143	065	9
52	304	836	794	928	269	.83994	726	034	167	048	8
53	329	821	819	913	293	978	750	017	191	032	7
54	354	806	844	897	317	962	775	001	215	015	6
55	.51379	.85792	.52869	.84882	.54342	.83946	.55799	.82985	.57238	.81999	5
56	404	777	893	866	366	930	823	969	262	982	4
57	429	762	918	851	391	915	847	953	286	965	3
58	454	747	943	836	415	899	871	936	310	949	2
59	479	732	967	820	440	883	895	920	334	932	1
60	.51504	.85717	.52992	.84805	.54464	.83867	.55919	.82904	.57358	.81915	0
	Cos.	Sin.	Cos.	Sin.	Cos.	Sin.	Cos.	Sin.	Cos.	Sin.	M.
	59°		58°		57°		56°		55°		

TABLE 59. — *Continued*

NATURAL SINES AND COSINES

M.	35° Sin.	35° Cos.	36° Sin.	36° Cos.	37° Sin.	37° Cos.	38° Sin.	38° Cos.	39° Sin.	39° Cos.	
0	.57358	.81915	.58779	.80902	.60182	.79864	.61566	.78801	.62932	.77715	60
1	381	899	802	885	205	846	589	783	955	696	59
2	405	882	826	867	228	829	612	765	977	678	58
3	429	865	849	850	251	811	635	747	.63000	660	57
4	453	848	873	833	274	793	658	729	022	641	56
5	.57477	.81832	.58896	.80816	.60298	.79776	.61681	.78711	.63045	.77623	55
6	501	815	920	799	321	758	704	694	068	605	54
7	524	798	943	782	344	741	726	676	090	586	53
8	548	782	967	765	367	723	749	658	113	568	52
9	572	765	990	748	390	706	772	640	135	550	51
10	.57596	.81748	.59014	.80730	.60414	.79688	.61795	.78622	.63158	.77531	50
11	619	731	037	713	437	671	818	604	180	513	49
12	643	714	061	696	460	653	841	586	203	494	48
13	667	698	084	679	483	635	864	568	225	476	47
14	691	681	108	662	506	618	887	550	248	458	46
15	.57715	.81664	.59131	.80644	.60529	.79600	.61909	.78532	.63271	.77439	45
16	738	647	154	627	553	583	932	514	293	421	44
17	762	631	178	610	576	565	955	496	316	402	43
18	786	614	201	593	599	547	978	478	338	384	42
19	810	597	225	576	622	530	.62001	460	361	366	41
20	.57833	.81580	.59248	.80558	.60645	.79512	.62024	.78442	.63383	.77347	40
21	857	563	272	541	668	494	046	424	406	329	39
22	881	546	295	524	691	477	069	405	428	310	38
23	904	530	318	507	714	459	092	387	451	292	37
24	928	513	342	489	738	441	115	369	473	273	36
25	.57952	.81496	.59365	.80472	.60761	.79424	.62138	.78351	.63496	.77255	35
26	976	479	389	455	784	406	160	333	518	236	34
27	999	462	412	438	807	388	183	315	540	218	33
28	.58023	445	436	420	830	371	206	297	563	199	32
29	047	428	459	403	853	353	229	279	585	181	31
30	.58070	.81412	.59482	.80386	.60876	.79335	.62251	.78261	.63608	.77162	30
31	094	395	506	368	899	318	274	243	630	144	29
32	118	378	529	351	922	300	297	225	653	125	28
33	141	361	552	334	945	282	320	206	675	107	27
34	165	344	576	316	968	264	342	188	698	088	26
35	.58189	.81327	.59599	.80299	.60991	.79247	.62365	.78170	.63720	.77070	25
36	212	310	622	282	.61015	229	388	152	742	051	24
37	236	293	646	264	038	211	411	134	765	033	23
38	260	276	669	247	061	193	433	116	787	014	22
39	283	259	693	230	084	176	456	098	810	.76996	21
40	.58307	.81242	.59716	.80212	.61107	.79158	.62479	.78079	.63832	.76977	20
41	330	225	739	195	130	140	502	061	854	959	19
42	354	208	763	178	153	122	524	043	877	940	18
43	378	191	786	160	176	105	547	025	899	921	17
44	401	174	809	143	199	087	570	007	922	903	16
45	.58425	.81157	.59832	.80125	.61222	.79069	.62592	.77988	.63944	.76884	15
46	449	140	856	108	245	051	615	970	966	866	14
47	472	123	879	091	268	033	638	952	989	847	13
48	496	106	902	073	291	016	660	934	.64011	828	12
49	519	089	926	056	314	.78998	683	916	033	810	11
50	.58543	.81072	.59949	.80038	.61337	.78980	.62706	.77897	.64056	.76791	10
51	567	055	972	021	360	962	728	879	078	772	9
52	590	038	995	003	383	944	751	861	100	754	8
53	614	021	.60019	.79986	406	926	774	843	123	735	7
54	637	004	042	968	429	908	796	824	145	717	6
55	.58661	.80987	.60065	.79951	.61451	.78891	.62819	.77806	.64167	.76698	5
56	684	970	089	934	474	873	842	788	190	679	4
57	708	953	112	916	497	855	864	769	212	661	3
58	731	936	135	899	520	837	887	751	234	642	2
59	755	919	158	881	543	819	909	733	256	623	1
60	.58779	.80902	.60182	.79864	.61566	.78801	.62932	.77715	.64279	.76604	0
	Cos.	Sin.	Cos.	Sin.	Cos.	Sin.	Cos.	Sin.	Cos.	Sin.	M
	54°		53°		52°		51°		50°		

TABLE 59.—*Continued*

NATURAL SINES AND COSINES

M.	40° Sin.	40° Cos.	41° Sin.	41° Cos.	42° Sin.	42° Cos.	43° Sin.	43° Cos.	44° Sin.	44° Cos.	
0	.64279	.76604	.65606	.75471	.66913	.74314	.68200	.73135	.69466	.71934	60
1	301	586	628	452	935	295	221	116	487	914	59
2	323	567	650	433	956	276	242	096	508	894	58
3	346	548	672	414	978	256	264	076	529	873	57
4	368	530	694	395	999	237	285	056	549	853	56
5	.64390	.76511	.65716	.75375	.67021	.74217	.68306	.73036	.69570	.71833	55
6	412	492	738	356	043	198	327	016	591	813	54
7	435	473	759	337	064	178	349	.72996	612	792	53
8	457	455	781	318	086	159	370	976	633	772	52
9	479	436	803	299	107	139	391	957	654	752	51
10	.64501	.76417	.65825	.75280	.67129	.74120	.68412	.72937	.69675	.71732	50
11	524	398	847	261	151	100	434	917	696	711	49
12	546	380	869	241	172	080	455	897	717	691	48
13	568	361	891	222	194	061	476	877	737	671	47
14	590	342	913	203	215	041	497	857	758	650	46
15	.64612	.76323	.65935	.75184	.67237	.74022	.68518	.72837	.69779	.71630	45
16	635	304	956	165	258	002	539	817	800	610	44
17	657	286	978	146	280	.73983	561	797	821	590	43
18	679	267	.66000	126	301	963	582	777	842	569	42
19	701	248	022	107	323	944	603	757	862	549	41
20	.64723	.76229	.66044	.75088	.67344	.73924	.68624	.72737	.69883	.71529	40
21	746	210	066	069	366	904	645	717	904	508	39
22	768	192	088	050	387	885	666	697	925	488	38
23	790	173	109	030	409	865	688	677	946	468	37
24	812	154	131	011	430	846	709	657	966	447	36
25	.64834	.76135	.66153	.74992	.67452	.73826	.68730	.72637	.69987	.71427	35
26	856	116	175	973	473	806	751	617	.70008	407	34
27	878	097	197	953	495	787	772	597	029	386	33
28	901	078	218	934	516	767	793	577	049	366	32
29	923	059	240	915	538	747	814	557	070	345	31
30	.64945	.76041	.66262	.74896	.67559	.73728	.68835	.72537	.70091	.71325	30
31	967	022	284	876	580	708	857	517	112	305	29
32	989	003	306	857	602	688	878	497	132	284	28
33	.65011	.75984	327	838	623	669	899	477	153	264	27
34	033	965	349	818	645	649	920	457	174	243	26
35	.65055	.75946	.66371	.74799	.67666	.73629	.68941	.72437	.70195	.71223	25
36	077	927	393	780	688	610	962	417	215	203	24
37	100	908	414	760	709	590	983	397	236	182	23
38	122	889	436	741	730	570	.69004	377	257	162	22
39	144	870	458	722	752	551	025	357	277	141	21
40	.65166	.75851	.66480	.74703	.67773	.73531	.69046	.72337	.70298	.71121	20
41	188	832	501	683	795	511	067	317	319	100	19
42	210	813	523	664	816	491	088	297	339	080	18
43	232	794	545	644	837	472	109	277	360	059	17
44	254	775	566	625	859	452	130	257	381	039	16
45	.65276	.75756	.66588	.74606	.67880	.73432	.69151	.72236	.70401	.71019	15
46	298	738	610	586	901	413	172	216	422	.70998	14
47	320	719	632	567	923	393	193	196	443	978	13
48	342	700	653	548	944	373	214	176	463	957	12
49	364	680	675	528	965	353	235	156	484	937	11
50	.65386	.75661	.66697	.74509	.67987	.73333	.69256	.72136	.70505	.70916	10
51	408	642	718	489	.68008	314	277	116	525	896	9
52	430	623	740	470	029	294	298	095	546	875	8
53	452	604	762	451	051	274	319	075	567	855	7
54	474	585	783	431	072	254	340	055	587	834	6
55	.65496	.75566	.66805	.74412	.68093	.73234	.69361	.72035	.70608	.70813	5
56	518	547	827	392	115	215	382	015	628	793	4
57	540	528	848	373	136	195	403	.71995	649	772	3
58	562	509	870	353	157	175	424	974	670	752	2
59	584	490	891	334	179	155	445	954	690	731	1
60	.65606	.75471	.66913	.74314	.68200	.73135	.69466	.71934	.70711	.70711	0
	Cos.	Sin.	Cos.	Sin.	Cos.	Sin.	Cos.	Sin.	Cos.	Sin.	M.
	49°		48°		47°		46°		45°		

TABLE 60

NATURAL TANGENTS AND COTANGENTS

M.	0° Tan.	0° Cot.	1° Tan.	1° Cot.	2° Tan.	2° Cot.	3° Tan.	3° Cot.	
0	.00000	∞	.01746	57.2900	.03492	28.6363	.05241	19.0811	60
1	029	3437.75	775	56.3506	521	.3994	270	18.9755	59
2	058	1718.87	804	55.4415	550	.1664	299	.8711	58
3	087	1145.92	833	54.5613	579	27.9372	328	.7678	57
4	116	859.436	862	53.7086	609	.7117	357	.6656	56
5	.00145	687.549	.01891	52.8821	.03638	27.4899	.05387	18.5645	55
6	175	572.957	920	52.0807	667	.2715	416	.4645	54
7	204	491.106	949	51.3032	696	.0566	445	.3655	53
8	233	429.718	978	50.5485	725	26.8450	474	.2677	52
9	262	381.971	.02007	49.8157	754	.6367	503	.1708	51
10	.00291	343.774	.02036	49.1039	.03783	26.4316	.05533	18.0750	50
11	320	312.521	066	48.4121	812	.2296	562	17.9802	49
12	349	286.478	095	47.7395	842	.0307	591	.8863	48
13	378	264.441	124	47.0853	871	25.8348	620	.7934	47
14	407	245.552	153	46.4489	900	.6418	649	.7015	46
15	.00436	229.182	.02182	45.8294	.03929	25.4517	.05678	17.6106	45
16	465	214.858	211	45.2261	958	.2644	708	.5205	44
17	495	202.219	240	44.6386	987	.0798	737	.4314	43
18	524	190.984	269	44.0661	.04016	24.8978	766	.3432	42
19	553	180.932	298	43.5081	046	.7185	795	.2558	41
20	.00582	171.885	.02328	42.9641	.04075	24.5418	.05824	17.1693	40
21	611	163.700	357	42.4335	104	.3675	854	.0837	39
22	640	156.259	386	41.9158	133	.1957	883	16.9990	38
23	669	149.465	415	41.4106	162	.0263	912	.9150	37
24	698	143.237	444	40.9174	191	23.8593	941	.8319	36
25	.00727	137.507	.02473	40.4358	.04220	23.6945	.05970	16.7496	35
26	756	132.219	502	39.9655	250	.5321	999	.6681	34
27	785	127.321	531	39.5059	279	.3718	.06029	.5874	33
28	815	122.774	560	39.0568	308	.2137	058	.5075	32
29	844	118.540	589	38.6177	337	.0577	087	.4283	31
30	.00873	114.589	.02619	38.1885	.04366	22.9038	.06116	16.3499	30
31	902	110.892	648	37.7686	395	.7519	145	.2722	29
32	931	107.426	677	37.3579	424	.6020	175	.1952	28
33	960	104.171	706	36.9560	454	.4541	204	.1190	27
34	989	101.107	735	36.5627	483	.3081	233	.0435	26
35	.01018	98.2179	.02764	36.1776	.04512	22.1640	.06262	15.9687	25
36	047	95.4895	793	35.8006	541	.0217	291	.8945	24
37	076	92.9085	822	35.4313	570	21.8813	321	.8211	23
38	105	90.4633	851	35.0695	599	.7426	350	.7483	22
39	135	88.1436	881	34.7151	628	.6056	379	.6762	21
40	.01164	85.9398	.02910	34.3678	.04658	21.4704	.06408	15.6048	20
41	193	83.8435	939	34.0273	687	.3369	438	.5340	19
42	222	81.8470	968	33.6935	716	.2049	467	.4638	18
43	251	79.9434	997	33.3662	745	.0747	496	.3943	17
44	280	78.1263	.03026	33.0452	774	20.9460	525	.3254	16
45	.01309	76.3900	.03055	32.7303	.04803	20.8188	.06554	15.2571	15
46	338	74.7292	084	32.4213	833	.6932	584	.1893	14
47	367	73.1390	114	32.1181	862	.5691	613	.1222	13
48	396	71.6151	143	31.8205	891	.4465	642	.0557	12
49	425	70.1533	172	31.5284	920	.3253	671	14.9898	11
50	.01455	68.7501	.03201	31.2416	.04949	20.2056	.06700	14.9244	10
51	484	67.4019	230	30.9599	978	.0872	730	.8596	9
52	513	66.1055	259	30.6833	.05007	19.9702	759	.7954	8
53	542	64.8580	288	30.4116	037	.8546	788	.7317	7
54	571	63.6567	317	30.1446	066	.7403	817	.6685	6
55	.01600	62.4992	.03346	29.8823	.05095	19.6273	.06847	14.6059	5
56	629	61.3829	376	29.6245	124	.5156	876	.5438	4
57	658	60.3058	405	29.3711	153	.4051	905	.4823	3
58	687	59.2659	434	29.1220	182	.2959	934	.4212	2
59	716	58.2612	463	28.8771	212	.1879	963	.3607	1
60	.01746	57.2900	.03492	28.6363	.05241	19.0811	.06993	14.3007	0
	Cot.	Tan.	Cot.	Tan.	Cot.	Tan.	Cot.	Tan.	
	89°		88°		87°		86°		

TABLE 60. — *Continued*

NATURAL TANGENTS AND COTANGENTS

M.	4° Tan.	4° Cot.	5° Tan.	5° Cot.	6° Tan.	6° Cot.	7° Tan.	7° Cot.	
0	.06993	14.3007	.08749	11.4301	.10510	9.51436	.12278	8.14435	60
1	.07022	.2411	778	.3919	540	.48781	308	.12481	59
2	051	.1821	807	.3540	569	.46141	338	.10536	58
3	080	.1235	837	.3163	599	.43515	367	.08600	57
4	110	.0655	866	.2789	628	.40904	397	.06674	56
5	.07139	14.0079	.08895	11.2417	.10657	9.38307	.12426	8.04756	55
6	168	13.9507	925	.2048	687	.35724	456	.02848	54
7	197	.8940	954	.1681	716	.33155	485	.00948	53
8	227	.8378	983	.1316	746	.30599	515	7.99058	52
9	256	.7821	.09013	.0954	775	.28058	544	.97176	51
10	.07285	13.7267	.09042	11.0594	.10805	9.25530	.12574	7.95302	50
11	314	.6719	071	.0237	834	.23016	603	.93438	49
12	344	.6174	101	10.9882	863	.20516	633	.91582	48
13	373	.5634	130	.9529	893	.18028	662	.89734	47
14	402	.5098	159	.9178	922	.15554	692	.87895	46
15	.07431	13.4566	.09189	10.8829	.10952	9.13093	.12722	7.86064	45
16	461	.4039	218	.8483	981	.10646	751	.84242	44
17	490	.3515	247	.8139	.11011	.08211	781	.82428	43
18	519	.2996	277	.7797	040	.05789	810	.80622	42
19	548	.2480	306	.7457	070	.03379	840	.78825	41
20	.07578	13.1969	.09335	10.7119	.11099	9.00983	.12869	7.77035	40
21	607	.1461	365	.6783	128	8.98598	899	.75254	39
22	636	.0958	394	.6450	158	.96227	929	.73480	38
23	665	.0458	423	.6118	187	.93867	958	.71715	37
24	695	12.9962	453	.5789	217	.91520	988	.69957	36
25	.07724	12.9469	.09482	10.5462	.11246	8.89185	.13017	7.68208	35
26	753	.8981	511	.5136	276	.86862	047	.66466	34
27	782	.8496	541	.4813	305	.84551	076	.64732	33
28	812	.8014	570	.4491	335	.82252	106	.63005	32
29	841	.7536	600	.4172	364	.79964	136	.61287	31
30	.07870	12.7062	.09629	10.3854	.11394	8.77689	.13165	7.59575	30
31	899	.6591	658	.3538	423	.75425	195	.57872	29
32	929	.6124	688	.3224	452	.73172	224	.56176	28
33	958	.5660	717	.2913	482	.70931	254	.54487	27
34	987	.5199	746	.2602	511	.68701	284	.52806	26
35	.08017	12.4742	.09776	10.2294	.11541	8.66482	.13313	7.51132	25
36	046	.4288	805	.1988	570	.64275	343	.49465	24
37	075	.3838	834	.1683	600	.62078	372	.47806	23
38	104	.3390	864	.1381	629	.59893	402	.46154	22
39	134	.2946	893	.1080	659	.57718	432	.44509	21
40	.08163	12.2505	.09923	10.0780	.11688	8.55555	.13461	7.42871	20
41	192	.2067	952	.0483	718	.53402	491	.41240	19
42	221	.1632	981	.0187	747	.51259	521	.39616	18
43	251	.1201	.10011	9.98931	777	.49128	550	.37999	17
44	280	.0772	040	.96007	806	.47007	580	.36389	16
45	.08309	12.0346	.10069	9.93101	.11836	8.44896	.13609	7.34786	15
46	339	11.9923	099	.90211	865	.42795	639	.33190	14
47	368	.9504	128	.87338	895	.40705	669	.31600	13
48	397	.9087	158	.84482	924	.38625	698	.30018	12
49	427	.8673	187	.81641	954	.36555	728	.28442	11
50	.08456	11.8262	.10216	9.78817	.11983	8.34496	.13758	7.26873	10
51	485	.7853	246	.76009	.12013	.32446	787	.25310	9
52	514	.7448	275	.73217	042	.30406	817	.23754	8
53	544	.7045	305	.70441	072	.28376	846	.22204	7
54	573	.6645	334	.67680	101	.26355	876	.20661	6
55	.08602	11.6248	.10363	9.64935	.12131	8.24345	.13906	7.19125	5
56	632	.5853	393	.62205	160	.22344	935	.17594	4
57	661	.5461	422	.59490	190	.20352	965	.16071	3
58	690	.5072	452	.56791	219	.18370	995	.14553	2
59	720	.4685	481	.54106	249	.16398	.14024	.13042	1
60	.08749	11.4301	.10510	9.51436	.12278	8.14435	.14054	7.11537	0
	Cot.	Tan.	Cot.	Tan.	Cot.	Tan.	Cot.	Tan.	M.
	85°		84°		83°		82°		

TABLE 60. — *Continued*

NATURAL TANGENTS AND COTANGENTS

M.	8° Tan.	8° Cot.	9° Tan.	9° Cot.	10° Tan.	10° Cot.	11° Tan.	11° Cot.	
0	.14054	7.11537	.15838	6.31375	.17633	5.67128	.19438	5.14455	60
1	084	.10038	868	.30189	663	.66165	468	.13658	59
2	113	.08546	898	.29007	693	.65205	498	.12862	58
3	143	.07059	928	.27829	723	.64248	529	.12069	57
4	173	.05579	958	.26655	753	.63295	559	.11279	56
5	.14202	7.04105	.15988	6.25486	.17783	5.62344	.19589	5.10490	55
6	232	.02637	.16017	.24321	813	.61397	619	.09704	54
7	262	.01174	047	.23160	843	.60452	649	.08921	53
8	291	6.99718	077	.22003	873	.59511	680	.08139	52
9	321	.98268	107	.20851	903	.58573	710	.07360	51
10	.14351	6.96823	.16137	6.19703	.17933	5.57638	.19740	5.06584	50
11	381	.95385	167	.18559	963	.56706	770	.05809	49
12	410	.93952	196	.17419	993	.55777	801	.05037	48
13	440	.92525	226	.16283	.18023	.54851	831	.04267	47
14	470	.91104	256	.15151	053	.53927	861	.03499	46
15	.14499	6.89688	.16286	6.14023	.18083	5.53007	.19891	5.02734	45
16	529	.88278	316	.12899	113	.52090	921	.01971	44
17	559	.86874	346	.11779	143	.51176	952	.01210	43
18	588	.85475	376	.10664	173	.50264	982	.00451	42
19	618	.84082	405	.09552	203	.49356	.20012	4.99695	41
20	.14648	6.82694	.16435	6.08444	.18233	5.48451	.20042	4.98940	40
21	678	.81312	465	.07340	263	.47548	073	.98188	39
22	707	.79936	495	.06240	293	.46648	103	.97438	38
23	737	.78564	525	.05143	323	.45751	133	.96690	37
24	767	.77199	555	.04051	353	.44857	164	.95945	36
25	.14796	6.75838	.16585	6.02962	.18384	5.43966	.20194	4.95201	35
26	826	.74483	615	.01878	414	.43077	224	.94460	34
27	856	.73133	645	.00797	444	.42192	254	.93721	33
28	886	.71789	674	5.99720	474	.41309	285	.92984	32
29	915	.70450	704	.98646	504	.40429	315	.92249	31
30	.14945	6.69116	.16734	5.97576	.18534	5.39552	.20345	4.91516	30
31	975	.67787	764	.96510	564	.38677	376	.90785	29
32	.15005	.66463	794	.95448	594	.37805	406	.90056	28
33	034	.65144	824	.94390	624	.36936	436	.89330	27
34	064	.63831	854	.93335	654	.36070	466	.88605	26
35	.15094	6.62523	.16884	5.92283	.18684	5.35206	.20497	4.87882	25
36	124	.61219	914	.91236	714	.34345	527	.87162	24
37	153	.59921	944	.90191	745	.33487	557	.86444	23
38	183	.58627	974	.89151	775	.32631	588	.85727	22
39	213	.57339	.17004	.88114	805	.31778	618	.85013	21
40	.15243	6.56055	.17033	5.87080	.18835	5.30928	.20648	4.84300	20
41	272	.54777	063	.86051	865	.30080	679	.83590	19
42	302	.53503	093	.85024	895	.29235	709	.82882	18
43	332	.52234	123	.84001	925	.28393	739	.82175	17
44	362	.50970	153	.82982	955	.27553	770	.81471	16
45	.15391	6.49710	.17183	5.81966	.18986	5.26715	.20800	4.80769	15
46	421	.48456	213	.80953	.19016	.25880	830	.80068	14
47	451	.47206	243	.79944	046	.25048	861	.79370	13
48	481	.45961	273	.78938	076	.24218	891	.78673	12
49	511	.44720	303	.77936	106	.23391	921	.77978	11
50	.15540	6.43484	.17333	5.76937	.19136	5.22566	.20952	4.77286	10
51	570	.42253	363	.75941	166	.21744	982	.76595	9
52	600	.41026	393	.74949	197	.20925	.21013	.75906	8
53	630	.39804	423	.73960	227	.20107	043	.75219	7
54	660	.38587	453	.72974	257	.19293	073	.74534	6
55	.15689	6.37374	.17483	5.71992	.19287	5.18480	.21104	4.73851	5
56	719	.36165	513	.71013	317	.17671	134	.73170	4
57	749	.34961	543	.70037	347	.16863	164	.72490	3
58	779	.33761	573	.69064	378	.16058	195	.71813	2
59	809	.32566	603	.68094	408	.15256	225	.71137	1
60	.15838	6.31375	.17633	5.67128	.19438	5.14455	.21256	4.70463	0
	Cot.	Tan.	Cot.	Tan.	Cot.	Tan.	Cot.	Tan.	M.
	81°		80°		79°		78°		

TABLE 60.—*Continued*

NATURAL TANGENTS AND COTANGENTS

M.	12° Tan.	12° Cot.	13° Tan.	13° Cot.	14° Tan.	14° Cot.	15° Tan.	15° Cot.	
0	.21256	4.70463	.23087	4.33148	.24933	4.01078	.26795	3.73205	60
1	286	.69791	117	.32573	964	.00582	826	.72771	59
2	316	.69121	148	.32001	995	.00086	857	.72338	58
3	347	.68452	179	.31430	.25026	3.99592	888	.71907	57
4	377	.67786	209	.30860	056	.99099	920	.71476	56
5	.21408	4.67121	.23240	4.30291	.25087	3.98607	.26951	3.71046	55
6	438	.66458	271	.29724	118	.98117	982	.70616	54
7	469	.65797	301	.29159	149	.97627	.27013	.70188	53
8	499	.65138	332	.28595	180	.97139	044	.69761	52
9	529	.64480	363	.28032	211	.96651	076	.69335	51
10	.21560	4.63825	.23393	4.27471	.25242	3.96165	.27107	3.68909	50
11	590	.63171	424	.26911	273	.95680	138	.68485	49
12	621	.62518	455	.26352	304	.95196	169	.68061	48
13	651	.61868	485	.25795	335	.94713	201	.67638	47
14	682	.61219	516	.25239	366	.94232	232	.67217	46
15	.21712	4.60572	.23547	4.24685	.25397	3.93751	.27263	3.66796	45
16	743	.59927	578	.24132	428	.93271	294	.66376	44
17	773	.59283	608	.23580	459	.92793	326	.65957	43
18	804	.58641	639	.23030	490	.92316	357	.65538	42
19	834	.58001	670	.22481	521	.91839	388	.65121	41
20	.21864	4.57363	.23700	4.21933	.25552	3.91364	.27419	3.64705	40
21	895	.56726	731	.21387	583	.90890	451	.64289	39
22	925	.56091	762	.20842	614	.90417	482	.63874	38
23	956	.55458	793	.20298	645	.89945	513	.63461	37
24	986	.54826	823	.19756	676	.89474	545	.63048	36
25	.22017	4.54196	.23854	4.19215	.25707	3.89004	.27576	3.62636	35
26	047	.53568	885	.18675	738	.88536	607	.62224	34
27	078	.52941	916	.18137	769	.88068	638	.61814	33
28	108	.52316	946	.17600	800	.87601	670	.61405	32
29	139	.51693	977	.17064	831	.87136	701	.60996	31
30	.22169	4.51071	.24008	4.16530	.25862	3.86671	.27732	3.60588	30
31	200	.50451	039	.15997	893	.86208	764	.60181	29
32	231	.49832	069	.15465	924	.85745	795	.59775	28
33	261	.49215	100	.14934	955	.85284	826	.59370	27
34	292	.48600	131	.14405	986	.84824	858	.58966	26
35	.22322	4.47986	.24162	4.13877	.26017	3.84364	.27889	3.58562	25
36	353	.47374	193	.13350	048	.83906	921	.58160	24
37	383	.46764	223	.12825	079	.83449	952	.57758	23
38	414	.46155	254	.12301	110	.82992	983	.57357	22
39	444	.45548	285	.11778	141	.82537	.28015	.56957	21
40	.22475	4.44942	.24316	4.11256	.26172	3.82083	.28046	3.56557	20
41	505	.44338	347	.10736	203	.81630	077	.56159	19
42	536	.43735	377	.10216	235	.81177	109	.55761	18
43	567	.43134	408	.09699	266	.80726	140	.55364	17
44	597	.42534	439	.09182	297	.80276	172	.54968	16
45	.22628	4.41936	.24470	4.08666	.26328	3.79827	.28203	3.54573	15
46	658	.41340	501	.08152	359	.79378	234	.54179	14
47	689	.40745	532	.07639	390	.78931	266	.53785	13
48	719	.40152	562	.07127	421	.78485	297	.53393	12
49	750	.39560	593	.06616	452	.78040	329	.53001	11
50	.22781	4.38969	.24624	4.06107	.26483	3.77595	.28360	3.52609	10
51	811	.38381	655	.05599	515	.77152	391	.52219	9
52	842	.37793	686	.05092	546	.76709	423	.51829	8
53	872	.37207	717	.04586	577	.76268	454	.51441	7
54	903	.36623	747	.04081	608	.75828	486	.51053	6
55	.22934	4.36040	.24778	4.03578	.26639	3.75388	.28517	3.50666	5
56	964	.35459	809	.03076	670	.74950	549	.50279	4
57	995	.34879	840	.02574	701	.74512	580	.49894	3
58	.23026	.34300	871	.02074	733	.74075	612	.49509	2
59	056	.33723	902	.01576	764	.73640	643	.49125	1
60	.23087	4.33148	.24933	4.01078	.26795	3.73205	.28675	3.48741	0
	Cot.	Tan.	Cot.	Tan.	Cot.	Tan.	Cot.	Tan.	M.
	77°		76°		75°		74°		

TABLE 60.—*Continued*

NATURAL TANGENTS AND COTANGENTS

M.	16° Tan.	16° Cot.	17° Tan.	17° Cot.	18° Tan.	18° Cot.	19° Tan.	19° Cot.	
0	.28675	3.48741	.30573	3.27085	.32492	3.07768	.34433	2.90421	60
1	706	.48359	605	.26745	524	.07464	465	.90147	59
2	738	.47977	637	.26406	556	.07160	498	.89873	58
3	769	.47596	669	.26067	588	.06857	530	.89600	57
4	801	.47216	700	.25729	621	.06554	563	.89327	56
5	.28832	3.46837	.30732	3.25392	.32653	3.06252	.34596	2.89055	55
6	864	.46458	764	.25055	685	.05950	628	.88783	54
7	895	.46080	796	.24719	717	.05649	661	.88511	53
8	927	.45703	828	.24383	749	.05349	693	.88240	52
9	958	.45327	860	.24049	782	.05049	726	.87970	51
10	.28990	3.44951	.30891	3.23714	.32814	3.04749	.34758	2.87700	50
11	.29021	.44576	923	.23381	846	.04450	791	.87430	49
12	053	.44202	955	.23048	878	.04152	824	.87161	48
13	084	.43829	987	.22715	911	.03854	856	.86892	47
14	116	.43456	.31019	.22384	943	.03556	889	.86624	46
15	.29147	3.43084	.31051	3.22053	.32975	3.03260	.34922	2.86356	45
16	179	.42713	083	.21722	.33007	.02963	954	.86089	44
17	210	.42343	115	.21392	040	.02667	987	.85822	43
18	242	.41973	147	.21063	072	.02372	.35020	.85555	42
19	274	.41604	178	.20734	104	.02077	052	.85289	41
20	.29305	3.41236	.31210	3.20406	.33136	3.01783	.35085	2.85023	40
21	337	.40869	242	.20079	169	.01489	118	.84758	39
22	368	.40502	274	.19752	201	.01196	150	.84494	38
23	400	.40136	306	.19426	233	.00903	183	.84229	37
24	432	.39771	338	.19100	266	.00611	216	.83965	36
25	.29463	3.39406	.31370	3.18775	.33298	3.00319	.35248	2.83702	35
26	495	.39042	402	.18451	330	.00028	281	.83439	34
27	526	.38679	434	.18127	363	2.99738	314	.83176	33
28	558	.38317	466	.17804	395	.99447	346	.82914	32
29	590	.37955	498	.17481	427	.99158	379	.82653	31
30	.29621	3.37594	.31530	3.17159	.33460	2.98868	.35412	2.82391	30
31	653	.37234	562	.16838	492	.98580	445	.82130	29
32	685	.36875	594	.16517	524	.98292	477	.81870	28
33	716	.36516	626	.16197	557	.98004	510	.81610	27
34	748	.36158	658	.15877	589	.97717	543	.81350	26
35	.29780	3.35800	.31690	3.15558	.33621	2.97430	.35576	2.81091	25
36	811	.35443	722	.15240	654	.97144	608	.80833	24
37	843	.35087	754	.14922	686	.96858	641	.80574	23
38	875	.34732	786	.14605	718	.96573	674	.80316	22
39	906	.34377	818	.14288	751	.96288	707	.80059	21
40	.29938	3.34023	.31850	3.13972	.33783	2.96004	.35740	2.79802	20
41	970	.33670	882	.13656	816	.95721	772	.79545	19
42	.30001	.33317	914	.13341	848	.95437	805	.79289	18
43	033	.32965	946	.13027	881	.95155	838	.79033	17
44	065	.32614	978	.12713	913	.94872	871	.78778	16
45	.30097	3.32264	.32010	3.12400	.33945	2.94591	.35904	2.78523	15
46	128	.31914	042	.12087	978	.94309	937	.78269	14
47	160	.31565	074	.11775	.34010	.94028	969	.78014	13
48	192	.31216	106	.11464	043	.93748	.36002	.77761	12
49	224	.30868	139	.11153	075	.93468	035	.77507	11
50	.30255	3.30521	.32171	3.10842	.34108	2.93189	.36068	2.77254	10
51	287	.30174	203	.10532	140	.92910	101	.77002	9
52	319	.29829	235	.10223	173	.92632	134	.76750	8
53	351	.29483	267	.09914	205	.92354	167	.76498	7
54	382	.29139	299	.09606	238	.92076	199	.76247	6
55	.30414	3.28795	.32331	3.09298	.34270	2.91799	.36232	2.75996	5
56	446	.28452	363	.08991	303	.91523	265	.75746	4
57	478	.28109	396	.08685	335	.91246	298	.75496	3
58	509	.27767	428	.08379	368	.90971	331	.75246	2
59	541	.27426	460	.08073	400	.90696	364	.74997	1
60	.30573	3.27085	.32492	3.07768	.34433	2.90421	.36397	2.74748	0
	Cot.	Tan.	Cot.	Tan.	Cot.	Tan.	Cot.	Tan.	M
	73°		72°		71°		70°		

TABLE 60.—*Continued*

NATURAL TANGENTS AND COTANGENTS

M.	20° Tan.	20° Cot.	21° Tan.	21° Cot.	22° Tan.	22° Cot.	23° Tan.	23° Cot.	
0	.36397	2.74748	.38386	2.60509	.40403	2.47509	.42447	2.35585	60
1	430	.74499	420	.60283	436	.47302	482	.35395	59
2	463	.74251	453	.60057	470	.47095	516	.35205	58
3	496	.74004	487	.59831	504	.46888	551	.35015	57
4	529	.73756	520	.59606	538	.46682	585	.34825	56
5	.36562	2.73509	.38553	2.59381	.40572	2.46476	.42619	2.34636	55
6	595	.73263	587	.59156	606	.46270	654	.34447	54
7	628	.73017	620	.58932	640	.46065	688	.34258	53
8	661	.72771	654	.58708	674	.45860	722	.34069	52
9	694	.72526	687	.58484	707	.45655	757	.33881	51
10	.36727	2.72281	.38721	2.58261	.40741	2.45451	.42791	2.33693	50
11	760	.72036	754	.58038	775	.45246	826	.33505	49
12	793	.71792	787	.57815	809	.45043	860	.33317	48
13	826	.71548	821	.57593	843	.44839	894	.33130	47
14	859	.71305	854	.57371	877	.44636	929	.32943	46
15	.36892	2.71062	.38888	2.57150	.40911	2.44433	.42963	2.32756	45
16	925	.70819	921	.56928	945	.44230	998	.32570	44
17	958	.70577	955	.56707	979	.44027	.43032	.32383	43
18	991	.70335	988	.56487	.41013	.43825	067	.32197	42
19	.37024	.70094	.39022	.56266	047	.43623	101	.32012	41
20	.37057	2.69853	.39055	2.56046	.41081	2.43422	.43136	2.31826	40
21	090	.69612	089	.55827	115	.43220	170	.31641	39
22	123	.69371	122	.55608	149	.43019	205	.31456	38
23	157	.69131	156	.55389	183	.42819	239	.31271	37
24	190	.68892	190	.55170	217	.42618	274	.31086	36
25	.37223	2.68653	.39223	2.54952	.41251	2.42418	.43308	2.30902	35
26	256	.68414	257	.54734	285	.42218	343	.30718	34
27	289	.68175	290	.54516	319	.42019	378	.30534	33
28	322	.67937	324	.54299	353	.41819	412	.30351	32
29	355	.67700	357	.54082	387	.41620	447	.30167	31
30	.37388	2.67462	.39391	2.53865	.41421	2.41421	.43481	2.29984	30
31	422	.67225	425	.53648	455	.41223	516	.29801	29
32	455	.66989	458	.53432	490	.41025	550	.29619	28
33	488	.66752	492	.53217	524	.40827	585	.29437	27
34	521	.66516	526	.53001	558	.40629	620	.29254	26
35	.37554	2.66281	.39559	2.52786	.41592	2.40432	.43654	2.29073	25
36	588	.66046	593	.52571	626	.40235	689	.28891	24
37	621	.65811	626	.52357	660	.40038	724	.28710	23
38	654	.65576	660	.52142	694	.39841	758	.28528	22
39	687	.65342	694	.51929	728	.39645	793	.28348	21
40	.37720	2.65109	.39727	2.51715	.41763	2.39449	.43828	2.28167	20
41	754	.64875	761	.51502	797	.39253	862	.27987	19
42	787	.64642	795	.51289	831	.39058	897	.27806	18
43	820	.64410	829	.51076	865	.38863	932	.27626	17
44	853	.64177	862	.50864	899	.38668	966	.27447	16
45	.37887	2.63945	.39896	2.50652	.41933	2.38473	.44001	2.27267	15
46	920	.63714	930	.50440	968	.38279	036	.27088	14
47	953	.63483	963	.50229	.42002	.38084	071	.26909	13
48	986	.63252	997	.50018	036	.37891	105	.26730	12
49	.38020	.63021	.40031	.49807	070	.37697	140	.26552	11
50	.38053	2.62791	.40065	2.49597	.42105	2.37504	.44175	2.26374	10
51	086	.62561	098	.49386	139	.37311	210	.26196	9
52	120	.62332	132	.49177	173	.37118	244	.26018	8
53	153	.62103	166	.48967	207	.36925	279	.25840	7
54	186	.61874	200	.48758	242	.36733	314	.25663	6
55	.38220	2.61646	.40234	2.48549	.42276	2.36541	.44349	2.25486	5
56	253	.61418	267	.48340	310	.36349	384	.25309	4
57	286	.61190	301	.48132	345	.36158	418	.25132	3
58	320	.60963	335	.47924	379	.35967	453	.24956	2
59	353	.60736	369	.47716	413	.35776	488	.24780	1
60	.38386	2.60509	.40403	2.47509	.42447	2.35585	.44523	2.24604	0
	Cot.	Tan.	Cot.	Tan.	Cot.	Tan.	Cot.	Tan.	M.
	69°		68°		67°		66°		

TABLE 60. — *Continued*

NATURAL TANGENTS AND COTANGENTS

M.	24° Tan.	24° Cot.	25° Tan.	25° Cot.	26° Tan.	26° Cot.	27° Tan.	27° Cot.	
0	.44523	2.24604	.46631	2.14451	.48773	2.05030	.50953	1.96261	60
1	558	.24428	666	.14288	809	.04879	989	.96120	59
2	593	.24252	702	.14125	845	.04728	.51026	.95979	58
3	627	.24077	737	.13963	881	.04577	063	.95838	57
4	662	.23902	772	.13801	917	.04426	099	.95698	56
5	.44697	2.23727	.46808	2.13639	.48953	2.04276	.51136	1.95557	55
6	732	.23553	843	.13477	989	.04125	173	.95417	54
7	767	.23378	879	.13316	.49026	.03975	209	.95277	53
8	802	.23204	914	.13154	062	.03825	246	.95137	52
9	837	.23030	950	.12993	098	.03675	283	.94997	51
10	.44872	2.22857	.46985	2.12832	.49134	2.03526	.51319	1.94858	50
11	907	.22683	.47021	.12671	170	.03376	356	.94718	49
12	942	.22510	056	.12511	206	.03227	393	.94579	48
13	977	.22337	092	.12350	242	.03078	430	.94440	47
14	.45012	.22164	128	.12190	278	.02929	467	.94301	46
15	.45047	2.21992	.47163	2.12030	.49315	2.02780	.51503	1.94162	45
16	082	.21819	199	.11871	351	.02631	540	.94023	44
17	117	.21647	234	.11711	387	.02483	577	.93885	43
18	152	.21475	270	.11552	423	.02335	614	.93746	42
19	187	.21304	305	.11392	459	.02187	651	.93608	41
20	.45222	2.21132	.47341	2.11233	.49495	2.02039	.51688	1.93470	40
21	257	.20961	377	.11075	532	.01891	724	.93332	39
22	292	.20790	412	.10916	568	.01743	761	.93195	38
23	327	.20619	448	.10758	604	.01596	798	.93057	37
24	362	.20449	483	.10600	640	.01449	835	.92920	36
25	.45397	2.20278	.47519	2.10442	.49677	2.01302	.51872	1.92782	35
26	432	.20108	555	.10284	713	.01155	909	.92645	34
27	467	.19938	590	.10126	749	.01008	946	.92508	33
28	502	.19769	626	.09969	786	.00862	983	.92371	32
29	538	.19599	662	.09811	822	.00715	.52020	.92235	31
30	.45573	2.19430	.47698	2.09654	.49858	2.00569	.52057	1.92098	30
31	608	.19261	733	.09498	894	.00423	094	.91962	29
32	643	.19092	769	.09341	931	.00277	131	.91826	28
33	678	.18923	805	.09184	967	.00131	168	.91690	27
34	713	.18755	840	.09028	.50004	1.99986	205	.91554	26
35	.45748	2.18587	.47876	2.08872	.50040	1.99841	.52242	1.91418	25
36	784	.18419	912	.08716	076	.99695	279	.91282	24
37	819	.18251	948	.08560	113	.99550	316	.91147	23
38	854	.18084	984	.08405	149	.99406	353	.91012	22
39	889	.17916	.48019	.08250	185	.99261	390	.90876	21
40	.45924	2.17749	.48055	2.08094	.50222	1.99116	.52427	1.90741	20
41	960	.17582	091	.07939	258	.98972	464	.90607	19
42	995	.17416	127	.07785	295	.98828	501	.90472	18
43	.46030	.17249	163	.07630	331	.98684	538	.90337	17
44	065	.17083	198	.07476	368	.98540	575	.90203	16
45	.46101	2.16917	.48234	2.07321	.50404	1.98396	.52613	1.90069	15
46	136	.16751	270	.07167	441	.98253	650	.89935	14
47	171	.16585	306	.07014	477	.98110	687	.89801	13
48	206	.16420	342	.06860	514	.97966	724	.89667	12
49	242	.16255	378	.06706	550	.97823	761	.89533	11
50	.46277	2.16090	.48414	2.06553	.50587	1.97681	.52798	1.89400	10
51	312	.15925	450	.06400	623	.97538	836	.89266	9
52	348	.15760	486	.06247	660	.97395	873	.89133	8
53	383	.15596	521	.06094	696	.97253	910	.89000	7
54	418	.15432	557	.05942	733	.97111	947	.88867	6
55	.46454	2.15268	.48593	2.05790	.50769	1.96969	.52985	1.88734	5
56	489	.15104	629	.05637	806	.96827	.53022	.88602	4
57	525	.14940	665	.05485	843	.96685	059	.88469	3
58	560	.14777	701	.05333	879	.96544	096	.88337	2
59	595	.14614	737	.05182	916	.96402	134	.88205	1
60	.46631	2.14451	.48773	2.05030	.50953	1.96261	.53171	1.88073	0
	Cot.	Tan.	Cot.	Tan.	Cot.	Tan.	Cot.	Tan.	M
	65°		64°		63°		62°		

TABLE 60.—*Continued*

NATURAL TANGENTS AND COTANGENTS

M.	28° Tan.	28° Cot.	29° Tan.	29° Cot.	30° Tan.	30° Cot.	31° Tan.	31° Cot.	
0	.53171	1.88073	.55431	1.80405	.57735	1.73205	.60086	1.66428	60
1	208	.87941	469	.80281	774	.73089	126	.66318	59
2	246	.87809	507	.80158	813	.72973	165	.66209	58
3	283	.87677	545	.80034	851	.72857	205	.66099	57
4	320	.87546	583	.79911	890	.72741	245	.65990	56
5	.53358	1.87415	.55621	1.79788	.57929	1.72625	.60284	1.65881	55
6	395	.87283	659	.79665	968	.72509	324	.65772	54
7	432	.87152	697	.79542	.58007	.72393	364	.65663	53
8	470	.87021	736	.79419	046	.72278	403	.65554	52
9	507	.86891	774	.79296	085	.72163	443	.65445	51
10	.53545	1.86760	.55812	1.79174	.58124	1.72047	.60483	1.65337	50
11	582	.86630	850	.79051	162	.71932	522	.65228	49
12	620	.86499	888	.78929	201	.71817	562	.65120	48
13	657	.86369	926	.78807	240	.71702	602	.65011	47
14	694	.86239	964	.78685	279	.71588	642	.64903	46
15	.53732	1.86109	.56003	1.78563	.58318	1.71473	.60681	1.64795	45
16	769	.85979	041	.78441	357	.71358	721	.64687	44
17	807	.85850	079	.78319	396	.71244	761	.64579	43
18	844	.85720	117	.78198	435	.71129	801	.64471	42
19	882	.85591	156	.78077	474	.71015	841	.64363	41
20	.53920	1.85462	.56194	1.77955	.58513	1.70901	.60881	1.64256	40
21	957	.85333	232	.77834	552	.70787	921	.64148	39
22	995	.85204	270	.77713	591	.70673	960	.64041	38
23	.54032	.85075	309	.77592	631	.70560	.61000	.63934	37
24	070	.84946	347	.77471	670	.70446	040	.63826	36
25	.54107	1.84818	.56385	1.77351	.58709	1.70332	.61080	1.63719	35
26	145	.84689	424	.77230	748	.70219	120	.63612	34
27	183	.84561	462	.77110	787	.70106	160	.63505	33
28	220	.84433	501	.76990	826	.69992	200	.63398	32
29	258	.84305	539	.76869	865	.69879	240	.63292	31
30	.54296	1.84177	.56577	1.76749	.58905	1.69766	.61280	1.63185	30
31	333	.84049	616	.76629	944	.69653	320	.63079	29
32	371	.83922	654	.76510	983	.69541	360	.62972	28
33	409	.83794	693	.76390	.59022	.69428	400	.62866	27
34	446	.83667	731	.76271	061	.69316	440	.62760	26
35	.54484	1.83540	.56769	1.76151	.59101	1.69203	.61480	1.62654	25
36	522	.83413	808	.76032	140	.69091	520	.62548	24
37	560	.83286	846	.75913	179	.68979	561	.62442	23
38	597	.83159	885	.75794	218	.68866	601	.62336	22
39	635	.83033	923	.75675	258	.68754	641	.62230	21
40	.54673	1.82906	.56962	1.75556	.59297	1.68643	.61681	1.62125	20
41	711	.82780	.57000	.75437	336	.68531	721	.62019	19
42	748	.82654	039	.75319	376	.68419	761	.61914	18
43	786	.82528	078	.75200	415	.68308	801	.61808	17
44	824	.82402	116	.75082	454	.68196	842	.61703	16
45	.54862	1.82276	.57155	1.74964	.59494	1.68085	.61882	1.61598	15
46	900	.82150	193	.74846	533	.67974	922	.61493	14
47	938	.82025	232	.74728	573	.67863	962	.61388	13
48	975	.81899	271	.74610	612	.67752	.62003	.61283	12
49	.55013	.81774	309	.74492	651	.67641	043	.61179	11
50	.55051	1.81649	.57348	1.74375	.59691	1.67530	.62083	1.61074	10
51	089	.81524	386	.74257	730	.67419	124	.60970	9
52	127	.81399	425	.74140	770	.67309	164	.60865	8
53	165	.81274	464	.74022	809	.67198	204	.60761	7
54	203	.81150	503	.73905	849	.67088	245	.60657	6
55	.55241	1.81025	.57541	1.73788	.59888	1.66978	.62285	1.60553	5
56	279	.80901	580	.73671	928	.66867	325	.60449	4
57	317	.80777	619	.73555	967	.66757	366	.60345	3
58	355	.80653	657	.73438	.60007	.66647	406	.60241	2
59	393	.80529	696	.73321	046	.66538	446	.60137	1
60	.55431	1.80405	.57735	1.73205	.60086	1.66428	.62487	1.60033	0
	Cot.	Tan.	Cot.	Tan.	Cot.	Tan.	Cot.	Tan.	M.
	61°		60°		59°		58°		

TABLE 60.—*Continued*

NATURAL TANGENTS AND COTANGENTS

M.	32° Tan.	32° Cot.	33° Tan.	33° Cot.	34° Tan.	34° Cot.	35° Tan.	35° Cot.	
0	.62487	1.60033	.64941	1.53986	.67451	1.48256	.70021	1.42815	60
1	527	.59930	982	.53888	493	.48163	064	.42726	59
2	568	.59826	.65024	.53791	536	.48070	107	.42638	58
3	608	.59723	065	.53693	578	.47977	151	.42550	57
4	649	.59620	106	.53595	620	.47885	194	.42462	56
5	.62689	1.59517	.65148	1.53497	.67663	1.47792	.70238	1.42374	55
6	730	.59414	189	.53400	705	.47699	281	.42286	54
7	770	.59311	231	.53302	748	.47607	325	.42198	53
8	811	.59208	272	.53205	790	.47514	368	.42110	52
9	852	.59105	314	.53107	832	.47422	412	.42022	51
10	.62892	1.59002	.65355	1.53010	.67875	1.47330	.70455	1.41934	50
11	933	.58900	397	.52913	917	.47238	499	.41847	49
12	973	.58797	438	.52816	960	.47146	542	.41759	48
13	.63014	.58695	480	.52719	.68002	.47053	586	.41672	47
14	055	.58593	521	.52622	045	.46962	629	.41584	46
15	.63095	1.58490	.65563	1.52525	.68088	1.46870	.70673	1.41497	45
16	136	.58388	604	.52429	130	.46778	717	.41409	44
17	177	.58286	646	.52332	173	.46686	760	.41322	43
18	217	.58184	688	.52235	215	.46595	804	.41235	42
19	258	.58083	729	.52139	258	.46503	848	.41148	41
20	.63299	1.57981	.65771	1.52043	.68301	1.46411	.70891	1.41061	40
21	340	.57879	813	.51946	343	.46320	935	.40974	39
22	380	.57778	854	.51850	386	.46229	979	.40887	38
23	421	.57676	896	.51754	429	.46137	.71023	.40800	37
24	462	.57575	938	.51658	471	.46046	066	.40714	36
25	.63503	1.57474	.65980	1.51562	.68514	1.45955	.71110	1.40627	35
26	544	.57372	.66021	.51466	557	.45864	154	.40540	34
27	584	.57271	063	.51370	600	.45773	198	.40454	33
28	625	.57170	105	.51275	642	.45682	242	.40367	32
29	666	.57069	147	.51179	685	.45592	285	.40281	31
30	.63707	1.56969	.66189	1.51084	.68728	1.45501	.71329	1.40195	30
31	748	.56868	230	.50988	771	.45410	373	.40109	29
32	789	.56767	272	.50893	814	.45320	417	.40022	28
33	830	.56667	314	.50797	857	.45229	461	.39936	27
34	871	.56566	356	.50702	900	.45139	505	.39850	26
35	.63912	1.56466	.66398	1.50607	.68942	1.45049	.71549	1.39764	25
36	953	.56366	440	.50512	985	.44958	593	.39679	24
37	994	.56265	482	.50417	.69028	.44868	637	.39593	23
38	.64035	.56165	524	.50322	071	.44778	681	.39507	22
39	076	.56065	566	.50228	114	.44688	725	.39421	21
40	.64117	1.55966	.66608	1.50133	.69157	1.44598	.71769	1.39336	20
41	158	.55866	650	.50038	200	.44508	813	.39250	19
42	199	.55766	692	.49944	243	.44418	857	.39165	18
43	240	.55666	734	.49849	286	.44329	901	.39079	17
44	281	.55567	776	.49755	329	.44239	946	.38994	16
45	.64322	1.55467	.66818	1.49661	.69372	1.44149	.71990	1.38909	15
46	363	.55368	860	.49566	416	.44060	.72034	.38824	14
47	404	.55269	902	.49472	459	.43970	078	.38738	13
48	446	.55170	944	.49378	502	.43881	122	.38653	12
49	487	.55071	986	.49284	545	.43792	167	.38568	11
50	.64528	1.54972	.67028	1.49190	.69588	1.43703	.72211	1.38484	10
51	569	.54873	071	.49097	631	.43614	255	.38399	9
52	610	.54774	113	.49003	675	.43525	299	.38314	8
53	652	.54675	155	.48909	718	.43436	344	.38229	7
54	693	.54576	197	.48816	761	.43347	388	.38145	6
55	.64734	1.54478	.67239	1.48722	.69804	1.43258	.72432	1.38060	5
56	775	.54379	282	.48629	847	.43169	477	.37976	4
57	817	.54281	324	.48536	891	.43080	521	.37891	3
58	858	.54183	366	.48442	934	.42992	565	.37807	2
59	899	.54085	409	.48349	977	.42903	610	.37722	1
60	.64941	1.53986	.67451	1.48256	.70021	1.42815	.72654	1.37638	0
	Cot.	Tan.	Cot.	Tan.	Cot.	Tan.	Cot.	Tan.	M
	57°		56°		55°		54°		

TABLE 60. — *Continued*

NATURAL TANGENTS AND COTANGENTS

M.	36° Tan.	36° Cot.	37° Tan.	37° Cot.	38° Tan.	38° Cot.	39° Tan.	39° Cot.	
0	.72654	1.37638	.75355	1.32704	.78129	1.27994	.80978	1.23490	60
1	699	.37554	401	.32624	175	.27917	.81027	.23416	59
2	743	.37470	447	.32544	222	.27841	075	.23343	58
3	788	.37386	492	.32464	269	.27764	123	.23270	57
4	832	.37302	538	.32384	316	.27688	171	.23196	56
5	.72877	1.37218	.75584	1.32304	.78363	1.27611	.81220	1.23123	55
6	921	.37134	629	.32224	410	.27535	268	.23050	54
7	966	.37050	675	.32144	457	.27458	316	.22977	53
8	.73010	.36967	721	.32064	504	.27382	364	.22904	52
9	055	.36883	767	.31984	551	.27306	413	.22831	51
10	.73100	1.36800	.75812	1.31904	.78598	1.27230	.81461	1.22758	50
11	144	.36716	858	.31825	645	.27153	510	.22685	49
12	189	.36633	904	.31745	692	.27077	558	.22612	48
13	234	.36549	950	.31666	739	.27001	606	.22539	47
14	278	.36466	996	.31586	786	.26925	655	.22467	46
15	.73323	1.36383	.76042	1.31507	.78834	1.26849	.81703	1.22394	45
16	368	.36300	088	.31427	881	.26774	752	.22321	44
17	413	.36217	134	.31348	928	.26698	800	.22249	43
18	457	.36134	180	.31269	975	.26622	849	.22176	42
19	502	.36051	226	.31190	.79022	.26546	898	.22104	41
20	.73547	1.35968	.76272	1.31110	.79070	1.26471	.81946	1.22031	40
21	592	.35885	318	.31031	117	.26395	995	.21959	39
22	637	.35802	364	.30952	164	.26319	.82044	.21886	38
23	681	.35719	410	.30873	212	.26244	092	.21814	37
24	726	.35637	456	.30795	259	.26169	141	.21742	36
25	.73771	1.35554	.76502	1.30716	.79306	1.26093	.82190	1.21670	35
26	816	.35472	548	.30637	354	.26018	238	.21598	34
27	861	.35389	594	.30558	401	.25943	287	.21526	33
28	906	.35307	640	.30480	449	.25867	336	.21454	32
29	951	.35224	686	.30401	496	.25792	385	.21382	31
30	.73996	1.35142	.76733	1.30323	.79544	1.25717	.82434	1.21310	30
31	.74041	.35060	779	.30244	591	.25642	483	.21238	29
32	086	.34978	825	.30166	639	.25567	531	.21166	28
33	131	.34896	871	.30087	686	.25492	580	.21094	27
34	176	.34814	918	.30009	734	.25417	629	.21023	26
35	.74221	1.34732	.76964	1.29931	.79781	1.25343	.82678	1.20951	25
36	267	.34650	.77010	.29853	829	.25268	727	.20879	24
37	312	.34568	057	.29775	877	.25193	776	.20808	23
38	357	.34487	103	.29696	924	.25118	825	.20736	22
39	402	.34405	149	.29618	972	.25044	874	.20665	21
40	.74447	1.34323	.77196	1.29541	.80020	1.24969	.82923	1.20593	20
41	492	.34242	242	.29463	067	.24895	972	.20522	19
42	538	.34160	289	.29385	115	.24820	.83022	.20451	18
43	583	.34079	335	.29307	163	.24746	071	.20379	17
44	628	.33998	382	.29229	211	.24672	120	.20308	16
45	.74674	1.33916	.77428	1.29152	.80258	1.24597	.83169	1.20237	15
46	719	.33835	475	.29074	306	.24523	218	.20166	14
47	764	.33754	521	.28997	354	.24449	268	.20095	13
48	810	.33673	568	.28919	402	.24375	317	.20024	12
49	855	.33592	615	.28842	450	.24301	366	.19953	11
50	.74900	1.33511	.77661	1.28764	.80498	1.24227	.83415	1.19882	10
51	946	.33430	708	.28687	546	.24153	465	.19811	9
52	991	.33349	754	.28610	594	.24079	514	.19740	8
53	.75037	.33268	801	.28533	642	.24005	564	.19669	7
54	082	.33187	848	.28456	690	.23931	613	.19599	6
55	.75128	1.33107	.77895	1.28379	.80738	1.23858	.83662	1.19528	5
56	173	.33026	941	.28302	786	.23784	712	.19457	4
57	219	.32946	988	.28225	834	.23710	761	.19387	3
58	264	.32865	.78035	.28148	882	.23637	811	.19316	2
59	310	.32785	082	.28071	930	.23563	860	.19246	1
60	.75355	1.32704	.78129	1.27994	.80978	1.23490	.83910	1.19175	0
	Cot.	Tan.	Cot.	Tan.	Cot.	Tan.	Cot.	Tan.	M.
	53°		52°		51°		50°		

TABLE 60.—*Continued*

NATURAL TANGENTS AND COTANGENTS

M.	40° Tan.	40° Cot.	41° Tan.	41° Cot.	42° Tan.	42° Cot.	43° Tan.	43° Cot.	
0	.83910	1.19175	.86929	1.15037	.90040	1.11061	.93252	1.07237	60
1	960	.19105	980	.14969	093	.10996	306	.07174	59
2	.84009	.19035	.87031	.14902	146	.10931	360	.07112	58
3	059	.18964	082	.14834	199	.10867	415	.07049	57
4	108	.18894	133	.14767	251	.10802	469	.06987	56
5	.84158	1.18824	.87184	1.14699	.90304	1.10737	.93524	1.06925	55
6	208	.18754	236	.14632	357	.10672	578	.06862	54
7	258	.18684	287	.14565	410	.10607	633	.06800	53
8	307	.18614	338	.14498	463	.10543	688	.06738	52
9	357	.18544	389	.14430	516	.10478	742	.06676	51
10	.84407	1.18474	.87441	1.14363	.90569	1.10414	.93797	1.06613	50
11	457	.18404	492	.14296	621	.10349	852	.06551	49
12	507	.18334	543	.14229	674	.10285	906	.06489	48
13	556	.18264	595	.14162	727	.10220	961	.06427	47
14	606	.18194	646	.14095	781	.10156	.94016	.06365	46
15	.84656	1.18125	.87698	1.14028	.90834	1.10091	.94071	1.06303	45
16	706	.18055	749	.13961	887	.10027	125	.06241	44
17	756	.17986	801	.13894	940	.09963	180	.06179	43
18	806	.17916	852	.13828	993	.09899	235	.06117	42
19	856	.17846	904	.13761	.91046	.09834	290	.06056	41
20	.84906	1.17777	.87955	1.13694	.91099	1.09770	.94345	1.05994	40
21	956	.17708	.88007	.13627	153	.09706	400	.05932	39
22	.85006	.17638	059	.13561	206	.09642	455	.05870	38
23	057	.17569	110	.13494	259	.09578	510	.05809	37
24	107	.17500	162	.13428	313	.09514	565	.05747	36
25	.85157	1.17430	.88214	1.13361	.91366	1.09450	.94620	1.05685	35
26	207	.17361	265	.13295	419	.09386	676	.05624	34
27	257	.17292	317	.13228	473	.09322	731	.05562	33
28	308	.17223	369	.13162	526	.09258	786	.05501	32
29	358	.17154	421	.13096	580	.09195	841	.05439	31
30	.85408	1.17085	.88473	1.13029	.91633	1.09131	.94896	1.05378	30
31	458	.17016	524	.12963	687	.09067	952	.05317	29
32	509	.16947	576	.12897	740	.09003	.95007	.05255	28
33	559	.16878	628	.12831	794	.08940	062	.05194	27
34	609	.16809	680	.12765	847	.08876	118	.05133	26
35	.85660	1.16741	.88732	1.12699	.91901	1.08813	.95173	1.05072	25
36	710	.16672	784	.12633	955	.08749	229	.05010	24
37	761	.16603	836	.12567	.92008	.08686	284	.04949	23
38	811	.16535	888	.12501	062	.08622	340	.04888	22
39	862	.16466	940	.12435	116	.08559	395	.04827	21
40	.85912	1.16398	.88992	1.12369	.92170	1.08496	.95451	1.04766	20
41	963	.16329	.89045	.12303	224	.08432	506	.04705	19
42	.86014	.16261	097	.12238	277	.08369	562	.04644	18
43	064	.16192	149	.12172	331	.08306	618	.04583	17
44	115	.16124	201	.12106	385	.08243	673	.04522	16
45	.86166	1.16056	.89253	1.12041	.92439	1.08179	.95729	1.04461	15
46	216	.15987	306	.11975	493	.08116	785	.04401	14
47	267	.15919	358	.11909	547	.08053	841	.04340	13
48	318	.15851	410	.11844	601	.07990	897	.04279	12
49	368	.15783	463	.11778	655	.07927	952	.04218	11
50	.86419	1.15715	.89515	1.11713	.92709	1.07864	.96008	1.04158	10
51	470	.15647	567	.11648	763	.07801	064	.04097	9
52	521	.15579	620	.11582	817	.07738	120	.04036	8
53	572	.15511	672	.11517	872	.07676	176	.03976	7
54	623	.15443	725	.11452	926	.07613	232	.03915	6
55	.86674	1.15375	.89777	1.11387	.92980	1.07550	.96288	1.03855	5
56	725	.15308	830	.11321	.93034	.07487	344	.03794	4
57	776	.15240	883	.11256	088	.07425	400	.03734	3
58	827	.15172	935	.11191	143	.07362	457	.03674	2
59	878	.15104	988	.11126	197	.07299	513	.03613	1
60	.86929	1.15037	.90040	1.11061	.93252	1.07237	.96569	1.03553	0
	Cot.	Tan.	Cot.	Tan.	Cot.	Tan.	Cot.	Tan.	
	49°		48°		47°		46°		

TABLE 60.—*Continued*

NATURAL TANGENTS AND COTANGENTS

M.	44° Tan.	44° Cot.		M.	44° Tan.	44° Cot.		M.	44° Tan.	44° Cot.	
0	.96569	1.03553	60	20	.97700	1.02355	40	40	.98843	1.01170	20
1	625	.03493	59	21	756	.02295	39	41	901	.01112	19
2	681	.03433	58	22	813	.02236	38	42	958	.01053	18
3	738	.03372	57	23	870	.02176	37	43	.99016	.00994	17
4	794	.03312	56	24	927	.02117	36	44	073	.00935	16
5	.96850	1.03252	55	25	.97984	1.02057	35	45	.99131	1.00876	15
6	907	.03192	54	26	.98041	.01998	34	46	189	.00818	14
7	963	.03132	53	27	098	.01939	33	47	247	.00759	13
8	.97020	.03072	52	28	155	.01879	32	48	304	.00701	12
9	076	.03012	51	29	213	.01820	31	49	362	.00642	11
10	.97133	1.02952	50	30	.98270	1.01761	30	50	.99420	1.00583	10
11	189	.02892	49	31	327	.01702	29	51	478	.00525	9
12	246	.02832	48	32	384	.01642	28	52	536	.00467	8
13	302	.02772	47	33	441	.01583	27	53	594	.00408	7
14	359	.02713	46	34	499	.01524	26	54	652	.00350	6
15	.97416	1.02653	45	35	.98556	1.01465	25	55	.99710	1.00291	5
16	472	.02593	44	36	613	.01406	24	56	768	.00233	4
17	529	.02533	43	37	671	.01347	23	57	826	.00175	3
18	586	.02474	42	38	728	.01288	22	58	884	.00116	2
19	643	.02414	41	39	786	.01229	21	59	942	.00058	1
20	.97700	1.02355	40	40	.98843	1.01170	20	60	1.00000	1.00000	0
	Cot.	Tan.	M.		Cot.	Tan.	M.		Cot.	Tan.	M.
	45°				45°				45°		

TABLE 61

NATURAL VERSED SINES AND EXTERNAL SECANTS

M.	0°		1°		2°		3°		M.
	Vers.	Exsec.	Vers.	Exsec.	Vers.	Exsec.	Vers.	Exsec.	
0	.00000	.00000	.00015	.00015	.00061	.00061	.00137	.00137	0
1	000	000	016	016	062	062	139	139	1
2	000	000	016	016	063	063	140	140	2
3	000	000	017	017	064	064	142	142	3
4	000	000	017	017	065	065	143	143	4
5	.00000	.00000	.00018	.00018	.00066	.00066	.00145	.00145	5
6	000	000	018	018	067	067	146	147	6
7	000	000	019	019	068	068	148	148	7
8	000	000	020	020	069	069	149	150	8
9	000	000	020	020	070	070	151	151	9
10	.00000	.00000	.00021	.00021	.00071	.00072	.00153	.00153	10
11	001	001	021	021	073	073	154	155	11
12	001	001	022	022	074	074	156	156	12
13	001	001	023	023	075	075	158	158	13
14	001	001	023	023	076	076	159	159	14
15	.00001	.00001	.00024	.00024	.00077	.00077	.00161	.00161	15
16	001	001	024	024	078	078	162	163	16
17	001	001	025	025	079	079	164	164	17
18	001	001	026	026	081	081	166	166	18
19	002	002	026	026	082	082	167	168	19
20	.00002	.00002	.00027	.00027	.00083	.00083	.00169	.00169	20
21	002	002	028	028	084	084	171	171	21
22	002	002	028	028	085	085	173	173	22
23	002	002	029	029	087	087	174	175	23
24	002	002	030	030	088	088	176	176	24
25	.00003	.00003	.00031	.00031	.00089	.00089	.00178	.00178	25
26	003	003	031	031	090	090	179	180	26
27	003	003	032	032	091	091	181	182	27
28	003	003	033	033	093	093	183	183	28
29	004	004	034	034	094	094	185	185	29
30	.00004	.00004	.00034	.00034	.00095	.00095	.00187	.00187	30
31	004	004	035	035	096	097	188	189	31
32	004	004	036	036	098	098	190	190	32
33	005	005	037	037	099	099	192	192	33
34	005	005	037	037	100	100	194	194	34
35	.00005	.00005	.00038	.00038	.00102	.00102	.00196	.00196	35
36	005	005	039	039	103	103	197	198	36
37	006	006	040	040	104	104	199	200	37
38	006	006	041	041	106	106	201	201	38
39	006	006	041	041	107	107	203	203	39
40	.00007	.00007	.00042	.00042	.00108	.00108	.00205	.00205	40
41	007	007	043	043	110	110	207	207	41
42	007	007	044	044	111	111	208	209	42
43	008	008	045	045	112	113	210	211	43
44	008	008	046	046	114	114	212	213	44
45	.00009	.00009	.00047	.00047	.00115	.00115	.00214	.00215	45
46	009	009	048	048	117	117	216	216	46
47	009	009	048	048	118	118	218	218	47
48	010	010	049	049	119	120	220	220	48
49	010	010	050	050	121	121	222	222	49
50	.00011	.00011	.00051	.00051	.00122	.00122	.00224	.00224	50
51	011	011	052	052	124	124	226	226	51
52	011	011	053	053	125	125	228	228	52
53	012	012	054	054	127	127	230	230	53
54	012	012	055	055	128	128	232	232	54
55	.00013	.00013	.00056	.00056	.00130	.00130	.00234	.00234	55
56	013	013	057	057	131	131	236	236	56
57	014	014	058	058	133	133	238	238	57
58	014	014	059	059	134	134	240	240	58
59	015	015	060	060	136	136	242	242	59
60	.00015	.00015	.00061	.00061	.00137	.00137	.00244	.00244	60

TABLE 61.—*Continued*

NATURAL VERSED SINES AND EXTERNAL SECANTS

M.	4°		5°		6°		7°		M.
	Vers.	Exsec.	Vers.	Exsec.	Vers.	Exsec.	Vers.	Exsec.	
0	.00244	.00244	.00381	.00382	.00548	.00551	.00745	.00751	0
1	246	246	383	385	551	554	749	755	1
2	248	248	386	387	554	557	752	758	2
3	250	250	388	390	557	560	756	762	3
4	252	252	391	392	560	563	760	765	4
5	.00254	.00254	.00393	.00395	.00563	.00566	.00763	.00769	5
6	256	257	396	397	566	569	767	773	6
7	258	259	398	400	569	573	770	776	7
8	260	261	401	403	572	576	774	780	8
9	262	263	404	405	576	579	778	784	9
10	.00264	.00265	.00406	.00408	.00579	.00582	.00781	.00787	10
11	266	267	409	411	582	585	785	791	11
12	269	269	412	413	585	588	789	795	12
13	271	271	414	416	588	592	792	799	13
14	273	274	417	419	591	595	796	802	14
15	.00275	.00276	.00420	.00421	.00594	.00598	.00800	.00806	15
16	277	278	422	424	598	601	803	810	16
17	279	280	425	427	601	604	807	813	17
18	281	282	428	429	604	608	811	817	18
19	284	284	430	432	607	611	814	821	19
20	.00286	.00287	.00433	.00435	.00610	.00614	.00818	.00825	20
21	288	289	436	438	614	617	822	828	21
22	290	291	438	440	617	621	825	832	22
23	292	293	441	443	620	624	829	836	23
24	295	296	444	446	623	627	833	840	24
25	.00297	.00298	.00447	.00449	.00626	.00630	.00837	.00844	25
26	299	300	449	451	630	634	840	848	26
27	301	302	452	454	633	637	844	851	27
28	304	305	455	457	636	640	848	855	28
29	306	307	458	460	640	644	852	859	29
30	.00308	.00309	.00460	.00463	.00643	.00647	.00856	.00863	30
31	311	312	463	465	646	650	859	867	31
32	313	314	466	468	649	654	863	871	32
33	315	316	469	471	653	657	867	875	33
34	317	318	472	474	656	660	871	878	34
35	.00320	.00321	.00474	.00477	.00659	.00664	.00875	.00882	35
36	322	323	477	480	663	667	878	886	36
37	324	326	480	482	666	671	882	890	37
38	327	328	483	485	669	674	886	894	38
39	329	330	486	488	673	677	890	898	39
40	.00332	.00333	.00489	.00491	.00676	.00681	.00894	.00902	40
41	334	335	492	494	680	684	898	906	41
42	336	337	494	497	683	688	902	910	42
43	339	340	497	500	686	691	906	914	43
44	341	342	500	503	690	695	909	918	44
45	.00343	.00345	.00503	.00506	.00693	.00698	.00913	.00922	45
46	346	347	506	509	697	701	917	926	46
47	348	349	509	512	700	705	921	930	47
48	351	352	512	515	703	708	925	934	48
49	353	354	515	518	707	712	929	938	49
50	.00356	.00357	.00518	.00521	.00710	.00715	.00933	.00942	50
51	358	359	521	524	714	719	937	946	51
52	361	362	524	527	717	722	941	950	52
53	363	364	527	530	721	726	945	954	53
54	365	367	530	533	724	730	949	958	54
55	.00368	.00369	.00533	.00536	.00728	.00733	.00953	.00962	55
56	370	372	536	539	731	737	957	966	56
57	373	374	539	542	735	740	961	970	57
58	375	377	542	545	738	744	965	975	58
59	378	379	545	548	742	747	969	979	59
60	.00381	.00382	.00548	.00551	.00745	.00751	.00973	.00983	60

TABLE 61.—*Continued*

NATURAL VERSED SINES AND EXTERNAL SECANTS

M.	8°		9°		10°		11°		M.
	Vers.	Exsec.	Vers.	Exsec.	Vers.	Exsec.	Vers.	Exsec.	
0	.00973	.00983	.01231	.01247	.01519	.01543	.01837	.01872	0
1	977	987	236	251	524	548	843	877	1
2	981	991	240	256	529	553	848	883	2
3	985	995	245	261	534	558	854	889	3
4	989	999	249	265	539	564	860	895	4
5	.00994	.01004	.01254	.01270	.01545	.01569	.01865	.01901	5
6	998	008	259	275	550	574	871	906	6
7	.01002	012	263	279	555	579	876	912	7
8	006	016	268	284	560	585	882	918	8
9	010	020	272	289	565	590	888	924	9
10	.01014	.01024	.01277	.01294	.01570	.01595	.01893	.01930	10
11	018	029	282	298	575	601	899	936	11
12	022	033	286	303	580	606	904	941	12
13	027	037	291	308	586	611	910	947	13
14	031	041	296	313	591	616	916	953	14
15	.01035	.01046	.01300	.01317	.01596	.01622	.01921	.01959	15
16	039	050	305	322	601	627	927	965	16
17	043	054	310	327	606	633	933	971	17
18	047	059	314	332	611	638	939	977	18
19	052	063	319	337	617	643	944	983	19
20	.01056	.01067	.01324	.01342	.01622	.01649	.01950	.01989	20
21	060	071	329	346	627	654	956	995	21
22	064	076	333	351	632	659	961	.02001	22
23	069	080	338	356	638	665	967	007	23
24	073	084	343	361	643	670	973	013	24
25	.01077	.01089	.01348	.01366	.01648	.01676	.01979	.02019	25
26	081	093	352	371	653	681	984	025	26
27	086	097	357	376	659	687	990	031	27
28	090	102	362	381	664	692	996	037	28
29	094	106	367	386	669	698	.02002	043	29
30	.01098	.01111	.01371	.01391	.01675	.01703	.02008	.02049	30
31	103	115	376	395	680	709	013	055	31
32	107	119	381	400	685	714	019	061	32
33	111	124	386	405	690	720	025	067	33
34	116	128	391	410	696	725	031	073	34
35	.01120	.01133	.01396	.01415	.01701	.01731	.02037	.02079	35
36	124	137	400	420	706	736	042	085	36
37	129	142	405	425	712	742	048	091	37
38	133	146	410	430	717	747	054	097	38
39	137	151	415	435	723	753	060	103	39
40	.01142	.01155	.01420	.01440	.01728	.01758	.02066	.02110	40
41	146	160	425	445	733	764	072	116	41
42	151	164	430	450	739	769	078	122	42
43	155	169	435	455	744	775	084	128	43
44	159	173	439	460	750	781	090	134	44
45	.01164	.01178	.01444	.01466	.01755	.01786	.02095	.02140	45
46	168	182	449	471	760	792	101	146	46
47	173	187	454	476	766	798	107	153	47
48	177	191	459	481	771	803	113	159	48
49	182	196	464	486	777	809	119	165	49
50	.01186	.01200	.01469	.01491	.01782	.01815	.02125	.02171	50
51	191	205	474	496	788	820	131	178	51
52	195	209	479	501	793	826	137	184	52
53	200	214	484	506	799	832	143	190	53
54	204	219	489	512	804	837	149	196	54
55	.01209	.01223	.01494	.01517	.01810	.01843	.02155	.02203	55
56	213	228	499	522	815	849	161	209	56
57	218	233	504	527	821	854	167	215	57
58	222	237	509	532	826	860	173	221	58
59	227	242	514	537	832	866	179	228	59
60	.01231	.01247	.01519	.01543	.01837	.01872	.02185	.02234	60

TABLE 61.—*Continued*

NATURAL VERSED SINES AND EXTERNAL SECANTS

M.	12°		13°		14°		15°		M.
	Vers.	Exsec.	Vers.	Exsec.	Vers.	Exsec.	Vers.	Exsec.	
0	.02185	.02234	.02563	.02630	.02970	.03061	.03407	.03528	0
1	191	240	570	637	977	069	415	536	1
2	197	247	576	644	985	076	422	544	2
3	203	253	583	651	992	084	430	552	3
4	209	259	589	658	999	091	438	560	4
5	.02216	.02266	.02596	.02665	.03006	.03099	.03445	.03568	5
6	222	272	602	672	013	106	453	576	6
7	228	279	609	679	020	114	460	584	7
8	234	285	616	686	027	121	468	592	8
9	240	291	622	693	034	129	476	601	9
10	.02246	.02298	.02629	.02700	.03041	.03137	.03483	.03609	10
11	252	304	635	707	048	144	491	617	11
12	258	311	642	714	055	152	498	625	12
13	265	317	649	721	063	159	506	633	13
14	271	323	655	728	070	167	514	642	14
15	.02277	.02330	.02662	.02735	.03077	.03175	.03521	.03650	15
16	283	336	669	742	084	182	529	658	16
17	289	343	675	749	091	190	537	666	17
18	295	349	682	756	098	197	544	674	18
19	302	356	689	763	106	205	552	683	19
20	.02308	.02362	.02696	.02770	.03113	.03213	.03560	.03691	20
21	314	369	702	777	120	220	567	699	21
22	320	375	709	784	127	228	575	708	22
23	327	382	716	791	134	236	583	716	23
24	333	388	722	799	142	244	590	724	24
25	.02339	.02395	.02729	.02806	.03149	.03251	.03598	.03732	25
26	345	402	736	813	156	259	606	741	26
27	352	408	743	820	163	267	614	749	27
28	358	415	749	827	171	275	621	758	28
29	364	421	756	834	178	282	629	766	29
30	.02370	.02428	.02763	.02842	.03185	.03290	.03637	.03774	30
31	377	435	770	849	193	298	645	783	31
32	383	441	777	856	200	306	653	791	32
33	389	448	783	863	207	313	660	799	33
34	396	454	790	870	214	321	668	808	34
35	.02402	.02461	.02797	.02878	.03222	.03329	.03676	.03816	35
36	408	468	804	885	229	337	684	825	36
37	415	474	811	892	236	345	692	833	37
38	421	481	818	899	244	353	699	842	38
39	427	488	824	907	251	360	707	850	39
40	.02434	.02494	.02831	.02914	.03258	.03368	.03715	.03858	40
41	440	501	838	921	266	376	723	867	41
42	447	508	845	928	273	384	731	875	42
43	453	515	852	936	281	392	739	884	43
44	459	521	859	943	288	400	747	892	44
45	.02466	.02528	.02866	.02950	.03295	.03408	.03754	.03901	45
46	472	535	873	958	303	416	762	909	46
47	479	542	880	965	310	424	770	918	47
48	485	548	887	972	318	432	778	927	48
49	492	555	894	980	325	439	786	935	49
50	.02498	.02562	.02900	.02987	.03333	.03447	.03794	.03944	50
51	504	569	907	994	340	455	802	952	51
52	511	576	914	.03002	347	463	810	961	52
53	517	582	921	009	355	471	818	969	53
54	524	589	928	017	362	479	826	978	54
55	.02530	.02596	.02935	.03024	.03370	.03487	.03834	.03987	55
56	537	603	942	032	377	495	842	995	56
57	543	610	949	039	385	503	850	.04004	57
58	550	617	956	046	392	511	858	013	58
59	556	624	963	054	400	520	866	021	59
60	.02563	.02630	.02970	.03061	.03407	.03528	.03874	.04030	60

TABLE 61.—*Continued*

NATURAL VERSED SINES AND EXTERNAL SECANTS

M.	16°		17°		18°		19°		M.
	Vers.	Exsec.	Vers.	Exsec.	Vers.	Exsec.	Vers.	Exsec.	
0	.03874	.04030	.04370	.04569	.04894	.05146	.05448	.05762	0
1	882	039	378	578	903	156	458	773	1
2	890	047	387	588	912	166	467	783	2
3	898	056	395	597	921	176	477	794	3
4	906	065	404	606	930	186	486	805	4
5	.03914	.04073	.04412	.04616	.04939	.05196	.05496	.05815	5
6	922	082	421	625	948	206	505	826	6
7	930	091	429	635	957	216	515	836	7
8	938	100	438	644	967	226	524	847	8
9	946	108	446	653	976	236	534	858	9
10	.03954	.04117	.04455	.04663	.04985	.05246	.05543	.05869	10
11	963	126	464	672	994	256	553	879	11
12	971	135	472	682	.05003	266	562	890	12
13	979	144	481	691	012	276	572	901	13
14	987	152	489	700	021	286	582	911	14
15	.03995	.04161	.04498	.04710	.05030	.05297	.05591	.05922	15
16	.04003	170	507	719	039	307	601	933	16
17	011	179	515	729	048	317	610	944	17
18	019	188	524	738	057	327	620	955	18
19	028	197	533	748	067	337	630	965	19
20	.04036	.04206	.04541	.04757	.05076	.05347	.05639	.05976	20
21	044	214	550	767	085	357	649	987	21
22	052	223	559	776	094	367	658	998	22
23	060	232	567	786	103	378	668	.06009	23
24	069	241	576	795	112	388	678	020	24
25	.04077	.04250	.04585	.04805	.05122	.05398	.05687	.06030	25
26	085	259	593	815	131	408	697	041	26
27	093	268	602	824	140	418	707	052	27
28	102	277	611	834	149	429	716	063	28
29	110	286	620	843	158	439	726	074	29
30	.04118	.04295	.04628	.04853	.05168	.05449	.05736	.06085	30
31	126	304	637	863	177	460	746	096	31
32	135	313	646	872	186	470	755	107	32
33	143	322	655	882	195	480	765	118	33
34	151	331	663	891	205	490	775	129	34
35	.04159	.04340	.04672	.04901	.05214	.05501	.05785	.06140	35
36	168	349	681	911	223	511	794	151	36
37	176	358	690	920	232	521	804	162	37
38	184	367	699	930	242	532	814	173	38
39	193	376	707	940	251	542	824	184	39
40	.04201	.04385	.04716	.04950	.05260	.05552	.05833	.06195	40
41	209	394	725	959	270	563	843	206	41
42	218	403	734	969	279	573	853	217	42
43	226	413	743	979	288	584	863	228	43
44	234	422	752	989	298	594	873	239	44
45	.04243	.04431	.04760	.04998	.05307	.05604	.05882	.06250	45
46	251	440	769	.05008	316	615	892	261	46
47	260	449	778	018	326	625	902	272	47
48	268	458	787	028	335	636	912	283	48
49	276	468	796	038	344	646	922	295	49
50	.04285	.04477	.04805	.05047	.05354	.05657	.05932	.06306	50
51	293	486	814	057	363	667	942	317	51
52	302	495	823	067	373	678	951	328	52
53	310	504	832	077	382	688	961	339	53
54	319	514	841	087	391	699	971	350	54
55	.04327	.04523	.04850	.05097	.05401	.05709	.05981	.06362	55
56	336	532	858	107	410	720	991	373	56
57	344	541	867	116	420	730	.06001	384	57
58	353	551	876	126	429	741	011	395	58
59	361	560	885	136	439	751	021	407	59
60	.04370	.04569	.04894	.05146	.05448	.05762	.06031	.06418	60

TABLE 61.—*Continued*

NATURAL VERSED SINES AND EXTERNAL SECANTS

M.	20°		21°		22°		23°		M.
	Vers.	Exsec.	Vers.	Exsec.	Vers.	Exsec.	Vers.	Exsec.	
0	.06031	.06418	.06642	.07114	.07282	.07853	.07950	.08636	0
1	041	429	652	126	293	866	961	649	1
2	051	440	663	138	303	879	972	663	2
3	061	452	673	150	314	892	984	676	3
4	071	463	684	162	325	904	995	690	4
5	.06081	.06474	.06694	.07174	.07336	.07917	.08006	.08703	5
6	091	486	705	186	347	930	018	717	6
7	101	497	715	199	358	943	029	730	7
8	111	508	726	211	369	955	041	744	8
9	121	520	736	223	380	968	052	757	9
10	.06131	.06531	.06747	.07235	.07391	.07981	.08064	.08771	10
11	141	542	757	247	402	994	075	784	11
12	151	554	768	259	413	.08006	086	798	12
13	161	565	778	271	424	019	098	811	13
14	171	577	789	283	435	032	109	825	14
15	.06181	.06588	.06799	.07295	.07446	.08045	.08121	.08839	15
16	191	600	810	307	457	058	132	852	16
17	201	611	820	320	468	071	144	866	17
18	211	622	831	332	479	084	155	880	18
19	221	634	841	344	490	097	167	893	19
20	.06231	.06645	.06852	.07356	.07501	.08109	.08178	.08907	20
21	241	657	863	368	512	122	190	920	21
22	252	668	873	380	523	135	201	934	22
23	262	680	884	393	534	148	213	948	23
24	272	691	894	405	545	161	225	962	24
25	.06282	.06703	.06905	.07417	.07556	.08174	.08236	.08975	25
26	292	715	916	429	568	187	248	989	26
27	302	726	926	442	579	200	259	.09003	27
28	312	738	937	454	590	213	271	017	28
29	323	749	948	466	601	226	282	030	29
30	.06333	.06761	.06958	.07479	.07612	.08239	.08294	.09044	30
31	343	773	969	491	623	252	306	058	31
32	353	784	980	503	634	265	317	072	32
33	363	796	990	516	645	278	329	086	33
34	374	807	.07001	528	657	291	340	099	34
35	.06384	.06819	.07012	.07540	.07668	.08305	.08352	.09113	35
36	394	831	022	553	679	318	364	127	36
37	404	842	033	565	690	331	375	141	37
38	415	854	044	578	701	344	387	155	38
39	425	866	055	590	713	357	399	169	39
40	.06435	.06878	.07065	.07602	.07724	.08370	.08410	.09183	40
41	445	889	076	615	735	383	422	197	41
42	456	901	087	627	746	397	434	211	42
43	466	913	098	640	757	410	445	224	43
44	476	925	108	652	769	423	457	238	44
45	.06486	.06936	.07119	.07665	.07780	.08436	.08469	.09252	45
46	497	948	130	677	791	449	481	266	46
47	507	960	141	690	802	463	492	280	47
48	517	972	151	702	814	476	504	294	48
49	528	984	162	715	825	489	516	308	49
50	.06538	.06995	.07173	.07727	.07836	.08503	.08528	.09323	50
51	548	.07007	184	740	848	516	539	337	51
52	559	019	195	752	859	529	551	351	52
53	569	031	206	765	870	542	563	365	53
54	580	043	216	778	881	556	575	379	54
55	.06590	.07055	.07227	.07790	.07893	.08569	.08586	.09393	55
56	600	067	238	803	904	582	598	407	56
57	611	079	249	816	915	596	610	421	57
58	621	091	260	828	927	609	622	435	58
59	632	103	271	841	938	623	634	449	59
60	.06642	.07114	.07282	.07853	.07950	.08636	.08645	.09464	60

TABLE 61.—*Continued*

NATURAL VERSED SINES AND EXTERNAL SECANTS

M.	24°		25°		26°		27°		M.
	Vers.	Exsec.	Vers.	Exsec.	Vers.	Exsec.	Vers.	Exsec.	
0	.08645	.09464	.09369	.10338	.10121	.11260	.10899	.12233	0
1	657	478	382	353	133	276	913	249	1
2	669	492	394	368	146	292	926	266	2
3	681	506	406	383	159	308	939	283	3
4	693	520	418	398	172	323	952	299	4
5	.08705	.09535	.09431	.10413	.10184	.11339	.10965	.12316	5
6	717	549	443	428	197	355	979	333	6
7	728	563	455	443	210	371	992	349	7
8	740	577	468	458	223	387	.11005	366	8
9	752	592	480	473	236	403	019	383	9
10	.08764	.09606	.09493	.10488	.10248	.11419	.11032	.12400	10
11	776	620	505	503	261	435	045	416	11
12	788	635	517	518	274	451	058	433	12
13	800	649	530	533	287	467	072	450	13
14	812	663	542	549	300	483	085	467	14
15	.08824	.09678	.09554	.10564	.10313	.11499	.11098	.12484	15
16	836	692	567	579	326	515	112	501	16
17	848	707	579	594	338	531	125	518	17
18	860	721	592	609	351	547	138	534	18
19	872	735	604	625	364	563	152	551	19
20	.08884	.09750	.09617	.10640	.10377	.11579	.11165	.12568	20
21	896	764	629	655	390	595	178	585	21
22	908	779	642	670	403	611	192	602	22
23	920	793	654	686	416	627	205	619	23
24	932	808	666	701	429	643	218	636	24
25	.08944	.09822	.09679	.10716	.10442	.11659	.11232	.12653	25
26	956	837	691	731	455	675	245	670	26
27	968	851	704	747	468	691	259	687	27
28	980	866	716	762	481	708	272	704	28
29	992	880	729	777	494	724	285	721	29
30	.09004	.09895	.09741	.10793	.10507	.11740	.11299	.12738	30
31	016	909	754	808	520	756	312	755	31
32	028	924	767	824	533	772	326	772	32
33	040	939	779	839	546	789	339	789	33
34	052	953	792	854	559	805	353	807	34
35	.09064	.09968	.09804	.10870	.10572	.11821	.11366	.12824	35
36	076	982	817	885	585	838	380	841	36
37	089	997	829	901	598	854	393	858	37
38	101	.10012	842	916	611	870	407	875	38
39	113	026	854	932	624	886	420	892	39
40	.09125	.10041	.09867	.10947	.10637	.11903	.11434	.12910	40
41	137	056	880	963	650	919	447	927	41
42	149	071	892	978	663	936	461	944	42
43	161	085	905	994	676	952	474	961	43
44	174	100	918	.11009	689	968	488	979	44
45	.09186	.10115	.09930	.11025	.10702	.11985	.11501	.12996	45
46	198	130	943	041	715	.12001	515	.13013	46
47	210	144	955	056	728	018	528	031	47
48	222	159	968	072	741	034	542	048	48
49	234	174	981	087	755	051	555	065	49
50	.09247	.10189	.09993	.11103	.10768	.12067	.11569	.13083	50
51	259	204	.10006	119	781	083	583	100	51
52	271	218	019	134	794	100	596	117	52
53	283	233	032	150	807	117	610	135	53
54	296	248	044	166	820	133	623	152	54
55	.09308	.10263	.10057	.11181	.10833	.12150	.11637	.13170	55
56	320	278	070	197	847	166	651	187	56
57	332	293	082	213	860	183	664	205	57
58	345	308	095	229	873	199	678	222	58
59	357	323	108	244	886	216	692	239	59
60	.09369	.10338	.10121	.11260	.10899	.12233	.11705	.13257	60

TABLE 61.—*Continued*

NATURAL VERSED SINES AND EXTERNAL SECANTS

M.	28°		29°		30°		31°		M.
	Vers.	Exsec.	Vers.	Exsec.	Vers.	Exsec.	Vers.	Exsec.	
0	.11705	.13257	.12538	.14335	.13397	.15470	.14283	.16663	0
1	719	275	552	354	412	489	298	684	1
2	733	292	566	372	427	509	313	704	2
3	746	310	580	391	441	528	328	725	3
4	760	327	594	409	456	548	343	745	4
5	.11774	.13345	.12609	.14428	.13470	.15567	.14358	.16766	5
6	787	362	623	446	485	587	373	786	6
7	801	380	637	465	499	606	388	806	7
8	815	398	651	483	514	626	403	827	8
9	828	415	665	502	529	645	418	848	9
10	.11842	.13433	.12679	.14521	.13543	.15665	.14433	.16868	10
11	856	451	694	539	558	684	449	889	11
12	870	468	708	558	573	704	464	909	12
13	883	486	722	576	587	724	479	930	13
14	897	504	736	595	602	743	494	950	14
15	.11911	.13521	.12750	.14614	.13616	.15763	.14509	.16971	15
16	925	539	765	632	631	782	524	992	16
17	938	557	779	651	646	802	539	.17012	17
18	952	575	793	670	660	822	554	033	18
19	966	593	807	689	675	841	569	054	19
20	.11980	.13610	.12822	.14707	.13690	.15861	.14584	.17075	20
21	994	628	836	726	705	881	599	095	21
22	.12007	646	850	745	719	901	615	116	22
23	021	664	864	764	734	920	630	137	23
24	035	682	879	782	749	940	645	158	24
25	.12049	.13700	.12893	.14801	.13763	.15960	.14660	.17178	25
26	063	718	907	820	778	980	675	199	26
27	077	735	921	839	793	.16000	690	220	27
28	091	753	936	858	808	019	706	241	28
29	104	771	950	877	822	039	721	262	29
30	.12118	.13789	.12964	.14896	.13837	.16059	.14736	.17283	30
31	132	807	979	914	852	079	751	304	31
32	146	825	993	933	867	099	766	325	32
33	160	843	.13007	952	881	119	782	346	33
34	174	861	022	971	896	139	797	367	34
35	.12188	.13879	.13036	.14990	.13911	.16159	.14812	.17388	35
36	202	897	051	.15009	926	179	827	409	36
37	216	915	065	028	941	199	843	430	37
38	230	934	079	047	955	219	858	451	38
39	244	952	094	066	970	239	873	472	39
40	.12257	.13970	.13108	.15085	.13985	.16259	.14888	.17493	40
41	271	988	122	105	.14000	279	904	514	41
42	285	.14006	137	124	015	299	919	535	42
43	299	024	151	143	030	319	934	556	43
44	313	042	166	162	044	339	949	577	44
45	.12327	.14061	.13180	.15181	.14059	.16359	.14965	.17598	45
46	341	079	195	200	074	380	980	620	46
47	355	097	209	219	089	400	995	641	47
48	369	115	223	239	104	420	.15011	662	48
49	383	134	238	258	119	440	026	683	49
50	.12397	.14152	.13252	.15277	.14134	.16460	.15041	.17704	50
51	411	170	267	296	149	481	057	726	51
52	425	188	281	315	164	501	072	747	52
53	439	207	296	335	179	521	087	768	53
54	454	225	310	354	194	541	103	790	54
55	.12468	.14243	.13325	.15373	.14208	.16562	.15118	.17811	55
56	482	262	339	393	223	582	134	832	56
57	496	280	354	412	238	602	149	854	57
58	510	299	368	431	253	623	164	875	58
59	524	317	383	451	268	643	180	896	59
60	.12538	.14335	.13397	.15470	.14283	.16663	.15195	.17918	60

TABLE 61. — *Continued*

NATURAL VERSED SINES AND EXTERNAL SECANTS

M.	32° Vers.	32° Exsec.	33° Vers.	33° Exsec.	34° Vers.	34° Exsec.	35° Vers.	35° Exsec.	M.
0	.15195	.17918	.16133	.19236	.17096	.20622	.18085	.22077	0
1	211	939	149	259	113	645	101	102	1
2	226	961	165	281	129	669	118	127	2
3	241	982	181	304	145	693	135	152	3
4	257	.18004	196	327	161	717	152	177	4
5	.15272	.18025	.16212	.19349	.17178	.20740	.18168	.22202	5
6	288	047	228	372	194	764	185	227	6
7	303	068	244	394	210	788	202	252	7
8	319	090	260	417	227	812	218	277	8
9	334	111	276	440	243	836	235	302	9
10	.15350	.18133	.16292	.19463	.17259	.20859	.18252	.22327	10
11	365	155	308	485	276	883	269	352	11
12	381	176	324	508	292	907	286	377	12
13	396	198	340	531	308	931	302	402	13
14	412	220	355	553	325	955	319	428	14
15	.15427	.18241	.16371	.19576	.17341	.20979	.18336	.22453	15
16	443	263	387	599	357	.21003	353	478	16
17	458	285	403	622	374	027	369	503	17
18	474	307	419	645	390	051	386	528	18
19	489	328	435	668	407	075	403	554	19
20	.15505	.18350	.16451	.19691	.17423	.21099	.18420	.22579	20
21	520	372	467	713	439	123	437	604	21
22	536	394	483	736	456	147	454	629	22
23	552	416	499	759	472	171	470	655	23
24	567	437	515	782	489	195	487	680	24
25	.15583	.18459	.16531	.19805	.17505	.21220	.18504	.22706	25
26	598	481	547	828	522	244	521	731	26
27	614	503	563	851	538	268	538	756	27
28	630	525	579	874	554	292	555	782	28
29	645	547	595	897	571	316	572	807	29
30	.15661	.18569	.16611	.19920	.17587	.21341	.18588	.22833	30
31	676	591	627	944	604	365	605	858	31
32	692	613	644	967	620	389	622	884	32
33	708	635	660	990	637	414	639	909	33
34	723	657	676	.20013	653	438	656	935	34
35	.15739	.18679	.16692	.20036	.17670	.21462	.18673	.22960	35
36	755	701	708	059	686	487	690	986	36
37	770	723	724	083	703	511	707	.23012	37
38	786	745	740	106	719	535	724	037	38
39	802	767	756	129	736	560	741	063	39
40	.15818	.18790	.16772	.20152	.17752	.21584	.18758	.23089	40
41	833	812	788	176	769	609	775	114	41
42	849	834	805	199	786	633	792	140	42
43	865	856	821	222	802	658	809	166	43
44	880	878	837	246	819	682	826	192	44
45	.15896	.18901	.16853	.20269	.17835	.21707	.18843	.23217	45
46	912	923	869	292	852	731	860	243	46
47	928	945	885	316	868	756	877	269	47
48	943	967	902	339	885	781	894	295	48
49	959	990	918	363	902	805	911	321	49
50	.15975	.19012	.16934	.20386	.17918	.21830	.18928	.23347	50
51	991	034	950	410	935	855	945	373	51
52	.16006	057	966	433	952	879	962	398	52
53	022	079	983	457	968	904	979	424	53
54	038	102	999	480	985	929	996	450	54
55	.16054	.19124	.17015	.20504	.18001	.21953	.19013	.23476	55
56	070	146	031	527	018	978	030	502	56
57	085	169	047	551	035	.22003	047	529	57
58	101	191	064	575	051	028	064	555	58
59	117	214	080	598	068	053	081	581	59
60	.16133	.19236	.17096	.20622	.18085	.22077	.19098	.23607	60

TABLE 61. — *Continued*

NATURAL VERSED SINES AND EXTERNAL SECANTS

M.	36°		37°		38°		39°		M.
	Vers.	Exsec.	Vers.	Exsec.	Vers.	Exsec.	Vers.	Exsec.	
0	.19098	.23607	.20136	.25214	.21199	.26902	.22285	.28676	0
1	115	633	154	241	217	931	304	706	1
2	133	659	171	269	235	960	322	737	2
3	150	685	189	296	253	988	340	767	3
4	167	711	207	324	271	.27017	359	797	4
5	.19184	.23738	.20224	.25351	.21289	.27046	.22377	.28828	5
6	201	764	242	379	306	075	395	858	6
7	218	790	259	406	324	104	414	889	7
8	235	816	277	434	342	133	432	919	8
9	252	843	294	462	360	162	450	950	9
10	.19270	.23869	.20312	.25489	.21378	.27191	.22469	.28980	10
11	287	895	329	517	396	221	487	.29011	11
12	304	922	347	545	414	250	506	042	12
13	321	948	365	572	432	279	524	072	13
14	338	975	382	600	450	308	542	103	14
15	.19356	.24001	.20400	.25628	.21468	.27337	.22561	.29133	15
16	373	028	417	656	486	366	579	164	16
17	390	054	435	683	504	396	598	195	17
18	407	081	453	711	522	425	616	226	18
19	424	107	470	739	540	454	634	256	19
20	.19442	.24134	.20488	.25767	.21558	.27483	.22653	.29287	20
21	459	160	506	795	576	513	671	318	21
22	476	187	523	823	595	542	690	349	22
23	493	213	541	851	613	572	708	380	23
24	511	240	559	879	631	601	727	411	24
25	.19528	.24267	.20576	.25907	.21649	.27630	.22745	.29442	25
26	545	293	594	935	667	660	764	473	26
27	562	320	612	963	685	689	782	504	27
28	580	347	629	991	703	719	801	535	28
29	597	373	647	.26019	721	748	819	566	29
30	.19614	.24400	.20665	.26047	.21739	.27778	.22838	.29597	30
31	632	427	682	075	757	807	856	628	31
32	649	454	700	104	775	837	875	659	32
33	666	481	718	132	794	867	893	690	33
34	684	508	736	160	812	896	912	721	34
35	.19701	.24534	.20753	.26188	.21830	.27926	.22930	.29752	35
36	718	561	771	216	848	956	949	784	36
37	736	588	789	245	866	985	967	815	37
38	753	615	807	273	884	.28015	986	846	38
39	770	642	824	301	902	045	.23004	877	39
40	.19788	.24669	.20842	.26330	.21921	.28075	.23023	.29909	40
41	805	696	860	358	939	105	041	940	41
42	822	723	878	387	957	134	060	971	42
43	840	750	895	415	975	164	079	.30003	43
44	857	777	913	443	993	194	097	034	44
45	.19875	.24804	.20931	.26472	.22012	.28224	.23116	.30066	45
46	892	832	949	500	030	254	134	097	46
47	909	859	967	529	048	284	153	129	47
48	927	886	984	557	066	314	172	160	48
49	944	913	.21002	586	084	344	190	192	49
50	.19962	.24940	.21020	.26615	.22103	.28374	.23209	.30223	50
51	979	967	038	643	121	404	228	255	51
52	997	995	056	672	139	434	246	287	52
53	.20014	.25022	074	701	157	464	265	318	53
54	032	049	092	729	176	495	283	350	54
55	.20049	.25077	.21109	.26758	.22194	.28525	.23302	.30382	55
56	066	104	127	787	212	555	321	413	56
57	084	131	145	815	231	585	339	445	57
58	101	159	163	844	249	615	358	477	58
59	119	186	181	873	267	646	377	509	59
60	.20136	.25214	.21199	.26902	.22285	.28676	.23396	.30541	60

TABLE 61. — *Continued*

NATURAL VERSED SINES AND EXTERNAL SECANTS

M.	40° Vers.	40° Exsec.	41° Vers.	41° Exsec.	42° Vers.	42° Exsec.	43° Vers.	43° Exsec.	M.
0	.23396	.30541	.24529	.32501	.25686	.34563	.26865	.36733	0
1	414	573	548	535	705	599	884	770	1
2	433	605	567	568	724	634	904	807	2
3	452	636	586	602	744	669	924	844	3
4	470	668	605	636	763	704	944	881	4
5	.23489	.30700	.24625	.32669	.25783	.34740	.26964	.36919	5
6	508	732	644	703	802	775	984	956	6
7	527	764	663	737	822	811	.27004	993	7
8	545	796	682	770	841	846	024	.37030	8
9	564	829	701	804	861	882	043	068	9
10	.23583	.30861	.24720	.32838	.25880	.34917	.27063	.37105	10
11	602	893	739	872	900	953	083	143	11
12	620	925	759	905	920	988	103	180	12
13	639	957	778	939	939	.35024	123	218	13
14	658	989	797	973	959	060	143	255	14
15	.23677	.31022	.24816	.33007	.25978	.35095	.27163	.37293	15
16	696	054	835	041	998	131	183	330	16
17	714	086	854	075	.26017	167	203	368	17
18	733	119	874	109	037	203	223	406	18
19	752	151	893	143	056	238	243	443	19
20	.23771	.31183	.24912	.33177	.26076	.35274	.27263	.37481	20
21	790	216	931	211	096	310	283	519	21
22	808	248	950	245	115	346	303	556	22
23	827	281	970	279	135	382	323	594	23
24	846	313	989	314	154	418	343	632	24
25	.23865	.31346	.25008	.33348	.26174	.35454	.27363	.37670	25
26	884	378	027	382	194	490	383	708	26
27	903	411	047	416	213	526	403	746	27
28	922	443	066	451	233	562	423	784	28
29	941	476	085	485	253	598	443	822	29
30	.23959	.31509	.25104	.33519	.26272	.35634	.27463	.37860	30
31	978	541	124	554	292	670	483	898	31
32	997	574	143	588	312	707	503	936	32
33	.24016	607	162	622	331	743	523	974	33
34	035	640	182	657	351	779	543	.38012	34
35	.24054	.31672	.25201	.33691	.26371	.35815	.27563	.38051	35
36	073	705	220	726	390	852	583	089	36
37	092	738	240	760	410	888	603	127	37
38	111	771	259	795	430	924	623	165	38
39	130	804	278	830	449	961	643	204	39
40	.24149	.31837	.25297	.33864	.26469	.35997	.27663	.38242	40
41	168	870	317	899	489	.36034	683	280	41
42	187	903	336	934	509	070	703	319	42
43	206	936	356	968	528	107	723	357	43
44	225	969	375	.34003	548	143	743	396	44
45	.24244	.32002	.25394	.34038	.26568	.36180	.27764	.38434	45
46	262	035	414	073	587	217	784	473	46
47	281	068	433	108	607	253	804	512	47
48	300	101	452	142	627	290	824	550	48
49	320	134	472	177	647	327	844	589	49
50	.24339	.32168	.25491	.34212	.26667	.36363	.27864	.38628	50
51	358	201	511	247	686	400	884	666	51
52	377	234	530	282	706	437	905	705	52
53	396	267	549	317	726	474	925	744	53
54	415	301	569	352	746	511	945	783	54
55	.24434	.32334	.25588	.34387	.26766	.36548	.27965	.38822	55
56	453	368	608	423	785	585	985	860	56
57	472	401	627	458	805	622	.28005	899	57
58	491	434	647	493	825	659	026	938	58
59	510	468	666	528	845	696	046	977	59
60	.24529	.32501	.25686	.34563	.26865	.36733	.28066	.39016	60

TABLE 61.—*Continued*

NATURAL VERSED SINES AND EXTERNAL SECANTS

M.	44° Vers.	44° Exsec.	45° Vers.	45° Exsec.	46° Vers.	46° Exsec.	47° Vers.	47° Exsec.	M.
0	.28066	.39016	.29289	.41421	.30534	.43956	.31800	.46628	0
1	086	055	310	463	555	999	821	674	1
2	106	095	330	504	576	.44042	843	719	2
3	127	134	351	545	597	086	864	765	3
4	147	173	372	586	618	129	885	811	4
5	.28167	.39212	.29392	.41627	.30639	.44173	.31907	.46857	5
6	187	251	413	669	660	217	928	903	6
7	208	291	433	710	681	260	949	949	7
8	228	330	454	752	702	304	971	995	8
9	248	369	475	793	723	347	992	.47041	9
10	.28268	.39409	.29495	.41835	.30744	.44391	.32013	.47087	10
11	289	448	516	876	765	435	035	134	11
12	309	487	537	918	786	479	056	180	12
13	329	527	557	959	807	523	077	226	13
14	350	566	578	.42001	828	567	099	272	14
15	.28370	.39606	.29599	.42042	.30849	.44610	.32120	.47319	15
16	390	646	619	084	870	654	141	365	16
17	410	685	640	126	891	698	163	411	17
18	431	725	661	168	912	742	184	458	18
19	451	764	681	209	933	787	205	504	19
20	.28471	.39804	.29702	.42251	.30954	.44831	.32227	.47551	20
21	492	844	723	293	975	875	248	598	21
22	512	884	743	335	996	919	270	644	22
23	532	924	764	377	.31017	963	291	691	23
24	553	963	785	419	038	.45007	312	738	24
25	.28573	.40003	.29805	.42461	.31059	.45052	.32334	.47784	25
26	593	043	826	503	080	096	355	831	26
27	614	083	847	545	101	141	377	878	27
28	634	123	868	587	122	185	398	925	28
29	655	163	888	630	143	229	420	972	29
30	.28675	.40203	.29909	.42672	.31165	.45274	.32441	.48019	30
31	695	243	930	714	186	319	462	066	31
32	716	283	951	756	207	363	484	113	32
33	736	324	971	799	228	408	505	160	33
34	757	364	992	841	249	452	527	207	34
35	.28777	.40404	.30013	.42883	.31270	.45497	.32548	.48254	35
36	797	444	034	926	291	542	570	301	36
37	818	485	054	968	312	587	591	349	37
38	838	525	075	.43011	334	631	613	396	38
39	859	565	096	053	355	676	634	443	39
40	.28879	.40606	.30117	.43096	.31376	.45721	.32656	.48491	40
41	900	646	138	139	397	766	677	538	41
42	920	687	158	181	418	811	699	586	42
43	941	727	179	224	439	856	720	633	43
44	961	768	200	267	461	901	742	681	44
45	.28981	.40808	.30221	.43309	.31482	.45946	.32763	.48728	45
46	.29002	849	242	352	503	992	785	776	46
47	022	890	263	395	524	.46037	806	824	47
48	043	930	283	438	545	082	828	871	48
49	063	971	304	481	566	127	849	919	49
50	.29084	.41012	.30325	.43524	.31588	.46173	.32871	.48967	50
51	104	053	346	567	609	218	893	.49015	51
52	125	093	367	610	630	263	914	063	52
53	145	134	388	653	651	309	936	111	53
54	166	175	409	696	673	354	957	159	54
55	.29187	.41216	.30430	.43739	.31694	.46400	.32979	.49207	55
56	207	257	451	783	715	445	.33001	255	56
57	228	298	471	826	736	491	022	303	57
58	248	339	492	869	758	537	044	351	58
59	269	380	513	912	779	582	065	399	59
60	.29289	.41421	.30534	.43956	.31800	.46628	.33087	.49448	60

TABLE 61. — *Continued*

NATURAL VERSED SINES AND EXTERNAL SECANTS

M.	48° Vers.	48° Exsec.	49° Vers.	49° Exsec.	50° Vers.	50° Exsec.	51° Vers.	51° Exsec.	M.
0	.33087	.49448	.34394	.52425	.35721	.55572	.37068	.58902	0
1	109	496	416	476	744	626	091	959	1
2	130	544	438	527	766	680	113	.59016	2
3	152	593	460	579	788	734	136	073	3
4	173	641	482	630	810	789	158	130	4
5	.33195	.49690	.34504	.52681	.35833	.55843	.37181	.59188	5
6	217	738	526	732	855	897	204	245	6
7	238	787	548	784	877	951	226	302	7
8	260	835	570	835	900	.56005	249	360	8
9	282	884	592	886	922	060	272	418	9
10	.33303	.49933	.34614	.52938	.35944	.56114	.37294	.59475	10
11	325	981	636	989	967	169	317	533	11
12	347	.50030	658	.53041	989	223	340	590	12
13	368	079	680	092	.36011	278	362	648	13
14	390	128	702	144	034	332	385	706	14
15	.33412	.50177	.34724	.53196	.36056	.56387	.37408	.59764	15
16	434	226	746	247	078	442	430	822	16
17	455	275	768	299	101	497	453	880	17
18	477	324	790	351	123	551	476	938	18
19	499	373	812	403	146	606	498	996	19
20	.33520	.50422	.34834	.53455	.36168	.56661	.37521	.60054	20
21	542	471	856	507	190	716	544	112	21
22	564	521	878	559	213	771	567	171	22
23	586	570	900	611	235	826	589	229	23
24	607	619	923	663	258	881	612	287	24
25	.33629	.50669	.34945	.53715	.36280	.56937	.37635	.60346	25
26	651	718	967	768	302	992	658	404	26
27	673	767	989	820	325	.57047	680	463	27
28	694	817	.35011	872	347	103	703	521	28
29	716	866	033	924	370	158	726	580	29
30	.33738	.50916	.35055	.53977	.36392	.57213	.37749	.60639	30
31	760	966	077	.54029	415	269	771	698	31
32	782	.51015	099	082	437	324	794	756	32
33	803	065	122	134	460	380	817	815	33
34	825	115	144	187	482	436	840	874	34
35	.33847	.51165	.35166	.54240	.36504	.57491	.37862	.60933	35
36	869	215	188	292	527	547	885	992	36
37	891	265	210	345	549	603	908	.61051	37
38	912	314	232	398	572	659	931	111	38
39	934	364	254	451	594	715	954	170	39
40	.33956	.51415	.35277	.54504	.36617	.57771	.37976	.61229	40
41	978	465	299	557	639	827	999	288	41
42	.34000	515	321	610	662	883	.38022	348	42
43	022	565	343	663	684	939	045	407	43
44	044	615	365	716	707	995	068	467	44
45	.34065	.51665	.35388	.54769	.36729	.58051	.38091	.61526	45
46	087	716	410	822	752	108	113	586	46
47	109	766	432	876	775	164	136	646	47
48	131	817	454	929	797	221	159	705	48
49	153	867	476	982	820	277	182	765	49
50	.34175	.51918	.35499	.55036	.36842	.58333	.38205	.61825	50
51	197	968	521	089	865	390	228	885	51
52	219	.52019	543	143	887	447	251	945	52
53	241	069	565	196	910	503	274	.62005	53
54	262	120	588	250	932	560	296	065	54
55	.34284	.52171	.35610	.55303	.36955	.58617	.38319	.62125	55
56	306	222	632	357	978	674	342	185	56
57	328	273	654	411	.37000	731	365	246	57
58	350	323	677	465	023	788	388	306	58
59	372	374	699	518	045	845	411	366	59
60	.34394	.52425	.35721	.55572	.37068	.58902	.38434	.62427	60

TABLE 61. — *Continued*

NATURAL VERSED SINES AND EXTERNAL SECANTS

M.	52° Vers.	52° Exsec.	53° Vers.	53° Exsec.	54° Vers.	54° Exsec.	55° Vers.	55° Exsec.	M.
0	.38434	.62427	.39818	.66164	.41221	.70130	.42642	.74345	0
1	457	487	842	228	245	198	666	417	1
2	480	548	865	292	269	267	690	490	2
3	503	609	888	357	292	335	714	562	3
4	526	669	911	421	316	403	738	635	4
5	.38549	.62730	.39935	.66486	.41339	.70472	.42762	.74708	5
6	571	791	958	550	363	540	785	781	6
7	594	852	981	615	386	609	809	854	7
8	617	913	.40005	679	410	677	833	927	8
9	640	974	028	744	433	746	857	.75000	9
10	.38663	.63035	.40051	.66809	.41457	.70815	.42881	.75073	10
11	686	096	074	873	481	884	905	146	11
12	709	157	098	938	504	953	929	219	12
13	732	218	121	.67003	528	.71022	953	293	13
14	755	279	144	068	551	091	976	366	14
15	.38778	.63341	.40168	.67133	.41575	.71160	.43000	.75440	15
16	801	402	191	198	599	229	024	513	16
17	824	464	214	264	622	298	048	587	17
18	847	525	237	329	646	368	072	661	18
19	870	587	261	394	670	437	096	734	19
20	.38893	.63648	.40284	.67460	.41693	.71506	.43120	.75808	20
21	916	710	307	525	717	576	144	882	21
22	939	772	331	591	740	646	168	956	22
23	962	834	354	656	764	715	192	.76031	23
24	985	895	378	722	788	785	216	105	24
25	.39009	.63957	.40401	.67788	.41811	.71855	.43240	.76179	25
26	032	.64019	424	853	835	925	264	253	26
27	055	081	448	919	859	995	287	328	27
28	078	144	471	985	882	.72065	311	402	28
29	101	206	494	.68051	906	135	335	477	29
30	.39124	.64268	.40518	.68117	.41930	.72205	.43359	.76552	30
31	147	330	541	183	953	275	383	626	31
32	170	393	564	250	977	346	407	701	32
33	193	455	588	316	.42001	416	431	776	33
34	216	518	611	382	024	487	455	851	34
35	.39239	.64580	.40635	.68449	.42048	.72557	.43479	.76926	35
36	262	643	658	515	072	628	503	.77001	36
37	286	705	682	582	096	698	527	077	37
38	309	768	705	648	119	769	551	152	38
39	332	831	728	715	143	840	575	227	39
40	.39355	.64894	.40752	.68782	.42167	.72911	.43599	.77303	40
41	378	957	775	848	190	982	623	378	41
42	401	.65020	799	915	214	.73053	647	454	42
43	424	083	822	982	238	124	671	530	43
44	447	146	846	.69049	262	195	695	606	44
45	.39471	.65209	.40869	.69116	.42285	.73267	.43720	.77681	45
46	494	272	892	183	309	338	744	757	46
47	517	335	916	250	333	409	768	833	47
48	540	399	939	318	357	481	792	910	48
49	563	462	963	385	381	552	816	986	49
50	.39586	.65526	.40986	.69452	.42404	.73624	.43840	.78062	50
51	610	589	.41010	520	428	696	864	138	51
52	633	653	033	587	452	768	888	215	52
53	656	717	057	655	476	840	912	291	53
54	679	780	080	723	499	911	936	368	54
55	.39702	.65844	.41104	.69790	.42523	.73983	.43960	.78445	55
56	726	908	127	858	547	.74056	984	521	56
57	749	972	151	926	571	128	.44008	598	57
58	772	.66036	174	994	595	200	032	675	58
59	795	100	198	.70062	619	272	057	752	59
60	.39818	.66164	.41221	.70130	.42642	.74345	.44081	.78829	60

TABLE 61. — *Continued*

NATURAL VERSED SINES AND EXTERNAL SECANTS

M.	56° Vers.	56° Exsec.	57° Vers.	57° Exsec.	58° Vers.	58° Exsec.	59° Vers.	59° Exsec.	M.
0	.44081	.78829	.45536	.83608	.47008	.88708	.48496	.94160	0
1	105	906	560	690	033	796	521	254	1
2	129	984	585	773	057	884	546	349	2
3	153	.79061	609	855	082	972	571	443	3
4	177	138	634	938	107	.89060	596	537	4
5	.44201	.79216	.45658	.84020	.47131	.89148	.48621	.94632	5
6	225	293	683	103	156	237	646	726	6
7	250	371	707	186	181	325	671	821	7
8	274	449	731	269	206	414	696	916	8
9	298	527	756	352	230	503	721	.95011	9
10	.44322	.79604	.45780	.84435	.47255	.89591	.48746	.95106	10
11	346	682	805	518	280	680	771	201	11
12	370	761	829	601	304	769	796	296	12
13	395	839	854	685	329	858	821	392	13
14	419	917	878	768	354	948	846	487	14
15	.44443	.79995	.45903	.84852	.47379	.90037	.48871	.95583	15
16	467	.80074	927	935	403	126	896	678	16
17	491	152	951	.85019	428	216	921	774	17
18	516	231	976	103	453	305	946	870	18
19	540	309	.46000	187	478	395	971	966	19
20	.44564	.80388	.46025	.85271	.47502	.90485	.48996	.96062	20
21	588	467	049	355	527	575	.49021	158	21
22	612	546	074	439	552	665	046	255	22
23	637	625	098	523	577	755	071	351	23
24	661	704	123	608	601	845	096	448	24
25	.44685	.80783	.46147	.85692	.47626	.90935	.49121	.96544	25
26	709	862	172	777	651	.91026	146	641	26
27	734	942	196	861	676	116	171	738	27
28	758	.81021	221	946	701	207	196	835	28
29	782	101	246	.86031	725	297	221	932	29
30	.44806	.81180	.46270	.86116	.47750	.91388	.49246	.97029	30
31	831	260	295	201	775	479	271	127	31
32	855	340	319	286	800	570	296	224	32
33	879	419	344	371	825	661	321	322	33
34	903	499	368	457	849	752	346	420	34
35	.44928	.81579	.46393	.86542	.47874	.91844	.49372	.97517	35
36	952	659	417	627	899	935	397	615	36
37	976	740	442	713	924	.92027	422	713	37
38	.45001	820	466	799	949	118	447	811	38
39	025	900	491	885	974	210	472	910	39
40	.45049	.81981	.46516	.86970	.47998	.92302	.49497	.98008	40
41	073	.82061	540	.87056	.48023	394	522	107	41
42	098	142	565	142	048	486	547	205	42
43	122	222	589	229	073	578	572	304	43
44	146	303	614	315	098	670	597	403	44
45	.45171	.82384	.46639	.87401	.48123	.92762	.49623	.98502	45
46	195	465	663	488	148	855	648	601	46
47	219	546	688	574	172	947	673	700	47
48	244	627	712	661	197	.93040	698	799	48
49	268	709	737	748	222	133	723	899	49
50	.45292	.82790	.46762	.87834	.48247	.93226	.49748	.98998	50
51	317	871	786	921	272	319	773	.99098	51
52	341	953	811	.88008	297	412	799	198	52
53	365	.83034	836	095	322	505	824	298	53
54	390	116	860	183	347	598	849	398	54
55	.45414	.83198	.46885	.88270	.48372	.93692	.49874	.99498	55
56	439	280	909	357	396	785	899	598	56
57	463	362	934	445	421	879	924	698	57
58	487	444	959	532	446	973	950	799	58
59	512	526	983	620	471	.94066	975	899	59
60	.45536	.83608	.47008	.88708	.48496	.94160	.50000	1.00000	60

TABLE 61. — *Continued*

NATURAL VERSED SINES AND EXTERNAL SECANTS

M.	60°		61°		62°		63°		M.
	Vers.	Exsec.	Vers.	Exsec.	Vers.	Exsec.	Vers.	Exsec.	
0	.50000	1.00000	.51519	1.06267	.53053	1.13005	.54601	1.20269	0
1	025	.00101	544	.06375	079	.13122	627	.20395	1
2	050	.00202	570	.06483	104	.13239	653	.20521	2
3	076	.00303	595	.06592	130	.13356	679	.20647	3
4	101	.00404	621	.06701	156	.13473	705	.20773	4
5	.50126	1.00505	.51646	1.06809	.53181	1.13590	.54731	1.20900	5
6	151	.00607	672	.06918	207	.13707	757	.21026	6
7	176	.00708	697	.07027	233	.13825	782	.21153	7
8	202	.00810	723	.07137	258	.13942	808	.21280	8
9	227	.00912	748	.07246	284	.14060	834	.21407	9
10	.50252	1.01014	.51774	1.07356	.53310	1.14178	.54860	1.21535	10
11	277	.01116	799	.07465	336	.14296	886	.21662	11
12	303	.01218	825	.07575	361	.14414	912	.21790	12
13	328	.01320	850	.07685	387	.14533	938	.21918	13
14	353	.01422	876	.07795	413	.14651	964	.22045	14
15	.50378	1.01525	.51901	1.07905	.53439	1.14770	.54990	1.22174	15
16	404	.01628	927	.08015	464	.14889	.55016	.22302	16
17	429	.01730	952	.08126	490	.15008	042	.22430	17
18	454	.01833	978	.08236	516	.15127	068	.22559	18
19	479	.01936	.52003	.08347	542	.15246	094	.22688	19
20	.50505	1.02039	.52029	1.08458	.53567	1.15366	.55120	1.22817	20
21	530	.02143	054	.08569	593	.15485	146	.22946	21
22	555	.02246	080	.08680	619	.15605	172	.23075	22
23	581	.02349	105	.08791	645	.15725	198	.23205	23
24	606	.02453	131	.08903	670	.15845	224	.23334	24
25	.50631	1.02557	.52156	1.09014	.53696	1.15965	.55250	1.23464	25
26	656	.02661	182	.09126	722	.16085	276	.23594	26
27	682	.02765	207	.09238	748	.16206	302	.23724	27
28	707	.02869	233	.09350	774	.16326	328	.23855	28
29	732	.02973	259	.09462	799	.16447	354	.23985	29
30	.50758	1.03077	.52284	1.09574	.53825	1.16568	.55380	1.24116	30
31	783	.03182	310	.09686	851	.16689	406	.24247	31
32	808	.03286	335	.09799	877	.16810	432	.24378	32
33	834	.03391	361	.09911	903	.16932	458	.24509	33
34	859	.03496	386	.10024	928	.17053	484	.24640	34
35	.50884	1.03601	.52412	1.10137	.53954	1.17175	.55510	1.24772	35
36	910	.03706	438	.10250	980	.17297	536	.24903	36
37	935	.03811	463	.10363	.54006	.17419	563	.25035	37
38	960	.03916	489	.10477	032	.17541	589	.25167	38
39	986	.04022	514	.10590	058	.17663	615	.25300	39
40	.51011	1.04128	.52540	1.10704	.54083	1.17786	.55641	1.25432	40
41	036	.04233	566	.10817	109	.17909	667	.25565	41
42	062	.04339	591	.10931	135	.18031	693	.25697	42
43	087	.04445	617	.11045	161	.18154	719	.25830	43
44	112	.04551	642	.11159	187	.18277	745	.25963	44
45	.51138	1.04657	.52668	1.11274	.54213	1.18401	.55771	1.26097	45
46	163	.04764	694	.11388	238	.18524	797	.26230	46
47	189	.04870	719	.11503	264	.18648	823	.26364	47
48	214	.04977	745	.11617	290	.18772	849	.26498	48
49	239	.05084	771	.11732	316	.18895	876	.26632	49
50	.51265	1.05191	.52796	1.11847	.54342	1.19019	.55902	1.26766	50
51	290	.05298	822	.11963	368	.19144	928	.26900	51
52	316	.05405	847	.12078	394	.19268	954	.27035	52
53	341	.05512	873	.12193	420	.19393	980	.27169	53
54	366	.05619	899	.12309	446	.19517	.56006	.27304	54
55	.51392	1.05727	.52924	1.12425	.54471	1.19642	.56032	1.27439	55
56	417	.05835	950	.12540	497	.19767	058	.27574	56
57	443	.05942	976	.12657	523	.19892	084	.27710	57
58	468	.06050	.53001	.12773	549	.20018	111	.27845	58
59	494	.06158	027	.12889	575	.20143	137	.27981	59
60	.51519	1.06267	.53053	1.13005	.54601	1.20269	.56163	1.28117	60

TABLE 61. — *Continued*

NATURAL VERSED SINES AND EXTERNAL SECANTS

M.	64° Vers.	64° Exsec.	65° Vers.	65° Exsec.	66° Vers.	66° Exsec.	67° Vers.	67° Exsec.	M.
0	.56163	1.28117	.57738	1.36620	.59326	1.45859	.60927	1.55930	0
1	189	.28253	765	.36768	353	.46020	954	.56106	1
2	215	.28390	791	.36916	379	.46181	980	.56282	2
3	241	.28526	817	.37064	406	.46342	.61007	.56458	3
4	267	.28663	844	.37212	433	.46504	034	.56634	4
5	.56294	1.28800	.57870	1.37361	.59459	1.46665	.61061	1.56811	5
6	320	.28937	896	.37509	486	.46827	088	.56988	6
7	346	.29074	923	.37658	512	.46989	114	.57165	7
8	372	.29211	949	.37808	539	.47152	141	.57342	8
9	398	.29349	976	.37957	566	.47314	168	.57520	9
10	.56425	1.29487	.58002	1.38107	.59592	1.47477	.61195	1.57698	10
11	451	.29625	028	.38256	619	.47640	222	.57876	11
12	477	.29763	055	.38406	645	.47804	248	.58054	12
13	503	.29901	081	.38556	672	.47967	275	.58233	13
14	529	.30040	108	.38707	699	.48131	302	.58412	14
15	.56555	1.30179	.58134	1.38857	.59725	1.48295	.61329	1.58591	15
16	582	.30318	160	.39008	752	.48459	356	.58771	16
17	608	.30457	187	.39159	779	.48624	383	.58950	17
18	634	.30596	213	.39311	805	.48789	409	.59130	18
19	660	.30735	240	.39462	832	.48954	436	.59311	19
20	.56687	1.30875	.58266	1.39614	.59859	1.49119	.61463	1.59491	20
21	713	.31015	293	.39766	885	.49284	490	.59672	21
22	739	.31155	319	.39918	912	.49450	517	.59853	22
23	765	.31295	345	.40070	938	.49616	544	.60035	23
24	791	.31436	372	.40222	965	.49782	570	.60217	24
25	.56818	1.31576	.58398	1.40375	.59992	1.49948	.61597	1.60399	25
26	844	.31717	425	.40528	.60018	.50115	624	.60581	26
27	870	.31858	451	.40681	045	.50282	651	.60763	27
28	896	.31999	478	.40835	072	.50449	678	.60946	28
29	923	.32140	504	.40988	098	.50617	705	.61129	29
30	.56949	1.32282	.58531	1.41142	.60125	1.50784	.61732	1.61313	30
31	975	.32424	557	.41296	152	.50952	759	.61496	31
32	.57001	.32566	584	.41450	178	.51120	785	.61680	32
33	028	.32708	610	.41605	205	.51289	812	.61864	33
34	054	.32850	637	.41760	232	.51457	839	.62049	34
35	.57080	1.32993	.58663	1.41914	.60259	1.51626	.61866	1.62234	35
36	106	.33135	690	.42070	285	.51795	893	.62419	36
37	133	.33278	716	.42225	312	.51965	920	.62604	37
38	159	.33422	743	.42380	339	.52134	947	.62790	38
39	185	.33565	769	.42536	365	.52304	974	.62976	39
40	.57212	1.33708	.58796	1.42692	.60392	1.52474	.62001	1.63162	40
41	238	.33852	822	.42848	419	.52645	027	.63348	41
42	264	.33996	849	.43005	445	.52815	054	.63535	42
43	291	.34140	875	.43162	472	.52986	081	.63722	43
44	317	.34284	902	.43318	499	.53157	108	.63909	44
45	.57343	1.34429	.58928	1.43476	.60526	1.53329	.62135	1.64097	45
46	369	.34573	955	.43633	552	.53500	162	.64285	46
47	396	.34718	981	.43790	579	.53672	189	.64473	47
48	422	.34863	.59008	.43948	606	.53845	216	.64662	48
49	448	.35009	034	.44106	633	.54017	243	.64851	49
50	.57475	1.35154	.59061	1.44264	.60659	1.54190	.62270	1.65040	50
51	501	.35300	087	.44423	686	.54363	297	.65229	51
52	527	.35446	114	.44582	713	.54536	324	.65419	52
53	554	.35592	140	.44741	740	.54709	351	.65609	53
54	580	.35738	167	.44900	766	.54883	378	.65799	54
55	.57606	1.35885	.59194	1.45059	.60793	1.55057	.62405	1.65989	55
56	633	.36031	220	.45219	820	.55231	431	.66180	56
57	659	.36178	247	.45378	847	.55405	458	.66371	57
58	685	.36325	273	.45539	873	.55580	485	.66563	58
59	712	.36473	300	.45699	900	.55755	512	.66755	59
60	.57738	1.36620	.59326	1.45859	.60927	1.55930	.62539	1.66947	60

TABLE 61.—*Continued*

NATURAL VERSED SINES AND EXTERNAL SECANTS

M.	68°		69°		70°		71°		M.
	Vers.	Exsec.	Vers.	Exsec.	Vers.	Exsec.	Vers.	Exsec.	
0	.62539	1.66947	.64163	1.79043	.65798	1.92380	.67443	2.07155	0
1	566	.67139	190	.79254	825	.92614	471	.07415	1
2	593	.67332	218	.79466	853	.92849	498	.07675	2
3	620	.67525	245	.79679	880	.93083	526	.07936	3
4	647	.67718	272	.79891	907	.93318	553	.08197	4
5	.62674	1.67911	.64299	1.80104	.65935	1.93554	.67581	2.08459	5
6	701	.68105	326	.80318	962	.93790	608	.08721	6
7	728	.68299	353	.80531	989	.94026	636	.08983	7
8	755	.68494	381	.80746	.66017	.94263	663	.09246	8
9	782	.68689	408	.80960	044	.94500	691	.09510	9
10	.62809	1.68884	.64435	1.81175	.66071	1.94737	.67718	2.09774	10
11	836	.69079	462	.81390	099	.94975	746	.10038	11
12	863	.69275	489	.81605	126	.95213	773	.10303	12
13	890	.69471	516	.81821	154	.95452	801	.10568	13
14	917	.69667	544	.82037	181	.95691	829	.10834	14
15	.62944	1.69864	.64571	1.82254	.66208	1.95931	.67856	2.11101	15
16	971	.70061	598	.82471	236	.96171	884	.11367	16
17	998	.70258	625	.82688	263	.96411	911	.11635	17
18	.63025	.70455	653	.82906	290	.96652	939	.11903	18
19	052	.70653	680	.83124	318	.96893	966	.12171	19
20	.63079	1.70851	.64707	1.83342	.66345	1.97135	.67994	2.12440	20
21	106	.71050	734	.83561	373	.97377	.68021	.12709	21
22	133	.71249	761	.83780	400	.97619	049	.12979	22
23	161	.71448	789	.83999	427	.97862	077	.13249	23
24	188	.71647	816	.84219	455	.98106	104	.13520	24
25	.63215	1.71847	.64843	1.84439	.66482	1.98349	.68132	2.13791	25
26	242	.72047	870	.84659	510	.98594	159	.14063	26
27	269	.72247	898	.84880	537	.98838	187	.14335	27
28	296	.72448	925	.85102	564	.99083	214	.14608	28
29	323	.72649	952	.85323	592	.99329	242	.14881	29
30	.63350	1.72850	.64979	1.85545	.66619	1.99574	.68270	2.15155	30
31	377	.73052	.65007	.85767	647	.99821	297	.15429	31
32	404	.73254	034	.85990	674	2.00067	325	.15704	32
33	431	.73456	061	.86213	702	.00315	352	.15979	33
34	458	.73659	088	.86437	729	.00562	380	.16255	34
35	.63485	1.73862	.65116	1.86661	.66756	2.00810	.68407	2.16531	35
36	512	.74065	143	.86885	784	.01059	435	.16808	36
37	539	.74269	170	.87109	811	.01308	463	.17085	37
38	566	.74473	197	.87334	839	.01557	490	.17363	38
39	594	.74677	225	.87560	866	.01807	518	.17641	39
40	.63621	1.74881	.65252	1.87785	.66894	2.02057	.68546	2.17920	40
41	648	.75086	279	.88011	921	.02308	573	.18199	41
42	675	.75292	306	.88238	949	.02559	601	.18479	42
43	702	.75497	334	.88465	976	.02810	628	.18759	43
44	729	.75703	361	.88692	.67003	.03062	656	.19040	44
45	.63756	1.75909	.65388	1.88920	.67031	2.03315	.68684	2.19322	45
46	783	.76116	416	.89148	058	.03568	711	.19604	46
47	810	.76323	443	.89376	086	.03821	739	.19886	47
48	838	.76530	470	.89605	113	.04075	767	.20169	48
49	865	.76737	497	.89834	141	.04329	794	.20453	49
50	.63892	1.76945	.65525	1.90063	.67168	2.04584	.68822	2.20737	50
51	919	.77154	552	.90293	196	.04839	849	.21021	51
52	946	.77362	579	.90524	223	.05094	877	.21306	52
53	973	.77571	607	.90754	251	.05350	905	.21592	53
54	.64000	.77780	634	.90986	278	.05607	932	.21878	54
55	.64027	1.77990	.65661	1.91217	.67306	2.05864	.68960	2.22165	55
56	055	.78200	689	.91449	333	.06121	988	.22452	56
57	082	.78410	716	.91681	361	.06379	.69015	.22740	57
58	109	.78621	743	.91914	388	.06637	043	.23028	58
59	136	.78832	771	.92147	416	.06896	071	.23317	59
60	.64163	1.79043	.65798	1.92380	.67443	2.07155	.69098	2.23607	60

TABLE 61.—*Continued*

NATURAL VERSED SINES AND EXTERNAL SECANTS

M.	72°		73°		74°		75°		M.
	Vers.	Exsec.	Vers.	Exsec.	Vers.	Exsec.	Vers.	Exsec.	
0	.69098	2.23607	.70763	2.42030	.72436	2.62796	.74118	2.86370	0
1	126	.23897	791	.42356	464	.63164	146	.86790	1
2	154	.24187	818	.42683	492	.63533	174	.87211	2
3	181	.24478	846	.43010	520	.63903	202	.87633	3
4	209	.24770	874	.43337	548	.64274	231	.88056	4
5	.69237	2.25062	.70902	2.43666	.72576	2.64645	.74259	2.88479	5
6	264	.25355	930	.43995	604	.65018	287	.88904	6
7	292	.25648	958	.44324	632	.65391	315	.89330	7
8	320	.25942	985	.44655	660	.65765	343	.89756	8
9	347	.26237	.71013	.44986	688	.66140	371	.90184	9
10	.69375	2.26531	.71041	2.45317	.72716	2.66515	.74399	2.90613	10
11	403	.26827	069	.45650	744	.66892	427	.91042	11
12	430	.27123	097	.45983	772	.67269	455	.91473	12
13	458	.27420	125	.46316	800	.67647	484	.91904	13
14	486	.27717	153	.46651	828	.68025	512	.92337	14
15	.69514	2.28015	.71180	2.46986	.72856	2.68405	.74540	2.92770	15
16	541	.28313	208	.47321	884	.68785	568	.93204	16
17	569	.28612	236	.47658	912	.69167	596	.93640	17
18	597	.28912	264	.47995	940	.69549	624	.94076	18
19	624	.29212	292	.48333	968	.69931	652	.94514	19
20	.69652	2.29512	.71320	2.48671	.72996	2.70315	.74680	2.94952	20
21	680	.29814	348	.49010	.73024	.70700	709	.95392	21
22	708	.30115	375	.49350	052	.71085	737	.95832	22
23	735	.30418	403	.49691	080	.71471	765	.96274	23
24	763	.30721	431	.50032	108	.71858	793	.96716	24
25	.69791	2.31024	.71459	2.50374	.73136	2.72246	.74821	2.97160	25
26	818	.31328	487	.50716	164	.72635	849	.97604	26
27	846	.31633	515	.51060	192	.73024	878	.98050	27
28	874	.31939	543	.51404	220	.73414	906	.98497	28
29	902	.32244	571	.51748	248	.73806	934	.98944	29
30	.69929	2.32551	.71598	2.52094	.73276	2.74198	.74962	2.99393	30
31	957	.32858	626	.52440	304	.74591	990	.99843	31
32	985	.33166	654	.52787	332	.74984	.75018	3.00293	32
33	.70013	.33474	682	.53134	360	.75379	046	.00745	33
34	040	.33783	710	.53482	388	.75775	075	.01198	34
35	.70068	2.34092	.71738	2.53831	.73416	2.76171	.75103	3.01652	35
36	096	.34403	766	.54181	444	.76568	131	.02107	36
37	124	.34713	794	.54531	472	.76966	159	.02563	37
38	151	.35025	822	.54883	500	.77365	187	.03020	38
39	179	.35336	850	.55234	529	.77765	216	.03479	39
40	.70207	2.35649	.71877	2.55587	.73557	2.78166	.75244	3.03938	40
41	235	.35962	905	.55940	585	.78568	272	.04398	41
42	263	.36276	933	.56294	613	.78970	300	.04860	42
43	290	.36590	961	.56649	641	.79374	328	.05322	43
44	318	.36905	989	.57005	669	.79778	356	.05786	44
45	.70346	2.37221	.72017	2.57361	.73697	2.80183	.75385	3.06251	45
46	374	.37537	045	.57718	725	.80589	413	.06717	46
47	401	.37854	073	.58076	753	.80996	441	.07184	47
48	429	.38171	101	.58434	781	.81404	469	.07652	48
49	457	.38489	129	.58794	809	.81813	497	.08121	49
50	.70485	2.38808	.72157	2.59154	.73837	2.82223	.75526	3.08591	50
51	513	.39128	185	.59514	865	.82633	554	.09063	51
52	540	.39448	213	.59876	893	.83045	582	.09535	52
53	568	.39768	241	.60238	921	.83457	610	.10009	53
54	596	.40089	269	.60601	950	.83871	638	.10484	54
55	.70624	2.40411	.72296	2.60965	.73978	2.84285	.75667	3.10960	55
56	652	.40734	324	.61330	.74006	.84700	695	.11437	56
57	679	.41057	352	.61695	034	.85116	723	.11915	57
58	707	.41381	380	.62061	062	.85533	751	.12394	58
59	735	.41705	408	.62428	090	.85951	780	.12875	59
60	.70763	2.42030	.72436	2.62796	.74118	2.86370	.75808	3.13357	60

TABLE 61. — *Continued*

NATURAL VERSED SINES AND EXTERNAL SECANTS

M.	76° Vers.	76° Exsec.	77° Vers.	77° Exsec.	78° Vers.	78° Exsec.	79° Vers.	79° Exsec.	M.
0	.75808	3.13357	.77505	3.44541	.79209	3.80973	.80919	4.24084	0
1	836	.13839	533	.45102	237	.81633	948	.24870	1
2	864	.14323	562	.45664	266	.82294	976	.25658	2
3	892	.14809	590	.46228	294	.82956	.81005	.26448	3
4	921	.15295	618	.46793	323	.83621	033	.27241	4
5	.75949	3.15782	.77647	3.47360	.79351	3.84288	.81062	4.28036	5
6	977	.16271	675	.47928	380	.84956	090	.28833	6
7	.76005	.16761	703	.48498	408	.85627	119	.29634	7
8	034	.17252	732	.49069	437	.86299	148	.30436	8
9	062	.17744	760	.49642	465	.86973	176	.31241	9
10	.76090	3.18238	.77788	3.50216	.79493	3.87649	.81205	4.32049	10
11	118	.18733	817	.50791	522	.88327	233	.32859	11
12	147	.19228	845	.51368	550	.89007	262	.33671	12
13	175	.19725	874	.51947	579	.89689	290	.34486	13
14	203	.20224	902	.52527	607	.90373	319	.35304	14
15	.76231	3.20723	.77930	3.53109	.79636	3.91058	.81348	4.36124	15
16	260	.21224	959	.53692	664	.91746	376	.36947	16
17	288	.21726	987	.54277	693	.92436	405	.37772	17
18	316	.22229	.78015	.54863	721	.93128	433	.38600	18
19	344	.22734	044	.55451	750	.93821	462	.39430	19
20	.76373	3.23239	.78072	3.56041	.79778	3.94517	.81491	4.40263	20
21	401	.23746	101	.56632	807	.95215	519	.41099	21
22	429	.24255	129	.57224	835	.95914	548	.41937	22
23	458	.24764	157	.57819	864	.96616	576	.42778	23
24	486	.25275	186	.58414	892	.97320	605	.43622	24
25	.76514	3.25787	.78214	3.59012	.79921	3.98025	.81633	4.44468	25
26	542	.26300	242	.59611	949	.98733	662	.45317	26
27	571	.26814	271	.60211	978	.99443	691	.46169	27
28	599	.27330	299	.60813	.80006	4.00155	719	.47023	28
29	627	.27847	328	.61417	035	.00869	748	.47881	29
30	.76655	3.28366	.78356	3.62023	.80063	4.01585	.81776	4.48740	30
31	684	.28885	384	.62630	092	.02303	805	.49603	31
32	712	.29406	413	.63238	120	.03024	834	.50468	32
33	740	.29929	441	.63849	149	.03746	862	.51337	33
34	769	.30452	470	.64461	177	.04471	891	.52208	34
35	.76797	3.30977	.78498	3.65074	.80206	4.05197	.81919	4.53081	35
36	825	.31503	526	.65690	234	.05926	948	.53958	36
37	854	.32031	555	.66307	263	.06657	977	.54837	37
38	882	.32560	583	.66925	291	.07390	.82005	.55720	38
39	910	.33090	612	.67545	320	.08125	034	.56605	39
40	.76938	3.33622	.78640	3.68167	.80348	4.08863	.82063	4.57493	40
41	967	.34154	669	.68791	377	.09602	091	.58383	41
42	995	.34689	697	.69417	405	.10344	120	.59277	42
43	.77023	.35224	725	.70044	434	.11088	148	.60174	43
44	052	.35761	754	.70673	462	.11835	177	.61073	44
45	.77080	3.36299	.78782	3.71303	.80491	4.12583	.82206	4.61976	45
46	108	.36839	811	.71935	519	.13334	234	.62881	46
47	137	.37380	839	.72569	548	.14087	263	.63790	47
48	165	.37923	868	.73205	577	.14842	292	.64701	48
49	193	.38466	896	.73843	605	.15599	320	.65616	49
50	.77222	3.39012	.78924	3.74482	.80634	4.16359	.82349	4.66533	50
51	250	.39558	953	.75123	662	.17121	377	.67454	51
52	278	.40106	981	.75766	691	.17886	406	.68377	52
53	307	.40656	.79010	.76411	719	.18652	435	.69304	53
54	335	.41206	038	.77057	748	.19421	463	.70234	54
55	.77363	3.41759	.79067	3.77705	.80776	4.20193	.82492	4.71166	55
56	392	.42312	095	.78355	805	.20966	521	.72102	56
57	420	.42867	123	.79007	833	.21742	549	.73041	57
58	448	.43424	152	.79661	862	.22521	578	.73983	58
59	477	.43982	180	.80316	891	.23301	607	.74929	59
60	.77505	3.44541	.79209	3.80973	.80919	4.24084	.82635	4.75877	60

TABLE 61. — *Continued*

NATURAL VERSED SINES AND EXTERNAL SECANTS

M.	80° Vers.	80° Exsec.	81° Vers.	81° Exsec.	82° Vers.	82° Exsec.	83° Vers.	83° Exsec.	M.
0	.82635	4.75877	.84357	5.39245	.86083	6.18530	.87813	7.20551	0
1	664	.76829	385	.40422	111	.20020	842	.22500	1
2	692	.77783	414	.41602	140	.21517	871	.24457	2
3	721	.78742	443	.42787	169	.23019	900	.26425	3
4	750	.79703	471	.43977	198	.24529	929	.28402	4
5	.82778	4.80667	.84500	5.45171	.86227	6.26044	.87957	7.30388	5
6	807	.81635	529	.46369	256	.27566	986	.32384	6
7	836	.82606	558	.47572	284	.29095	.88015	.34390	7
8	864	.83581	586	.48779	313	.30630	044	.36405	8
9	893	.84558	615	.49991	342	.32171	073	.38431	9
10	.82922	4.85539	.84644	5.51208	.86371	6.33719	.88102	7.40466	10
11	950	.86524	673	.52429	400	.35274	131	.42511	11
12	979	.87511	701	.53655	428	.36835	160	.44566	12
13	.83008	.88502	730	.54886	457	.38403	188	.46632	13
14	036	.89497	759	.56121	486	.39978	217	.48707	14
15	.83065	4.90495	.84788	5.57361	.86515	6.41560	.88246	7.50793	15
16	094	.91496	816	.58606	544	.43148	275	.52889	16
17	122	.92501	845	.59855	573	.44743	304	.54996	17
18	151	.93509	874	.61110	601	.46346	333	.57113	18
19	180	.94521	903	.62369	630	.47955	362	.59241	19
20	.83208	4.95536	.84931	5.63633	.86659	6.49571	.88391	7.61379	20
21	237	.96555	960	.64902	688	.51194	420	.63528	21
22	266	.97577	989	.66176	717	.52825	448	.65688	22
23	294	.98603	.85018	.67454	746	.54462	477	.67859	23
24	323	.99633	046	.68738	774	.56107	506	.70041	24
25	.83352	5.00666	.85075	5.70027	.86803	6.57759	.88535	7.72234	25
26	380	.01702	104	.71321	832	.59418	564	.74438	26
27	409	.02743	133	.72620	861	.61085	593	.76653	27
28	438	.03787	162	.73924	890	.62759	622	.78880	28
29	467	.04834	190	.75233	919	.64441	651	.81118	29
30	.83495	5.05886	.85219	5.76547	.86947	6.66130	.88680	7.83367	30
31	524	.06941	248	.77866	976	.67826	709	.85628	31
32	553	.08000	277	.79191	.87005	.69530	737	.87901	32
33	581	.09062	305	.80521	034	.71242	766	.90186	33
34	610	.10129	334	.81856	063	.72962	795	.92482	34
35	.83639	5.11199	.85363	5.83196	.87092	6.74689	.88824	7.94791	35
36	667	.12273	392	.84542	120	.76424	853	.97111	36
37	696	.13350	420	.85893	149	.78167	882	.99444	37
38	725	.14432	449	.87250	178	.79918	911	8.01788	38
39	754	.15517	478	.88612	207	.81677	940	.04146	39
40	.83782	5.16607	.85507	5.89979	.87236	6.83443	.88969	8.06515	40
41	811	.17700	536	.91352	265	.85218	998	.08897	41
42	840	.18797	564	.92731	294	.87001	.89027	.11292	42
43	868	.19898	593	.94115	322	.88792	055	.13699	43
44	897	.21004	622	.95505	351	.90592	084	.16120	44
45	.83926	5.22113	.85651	5.96900	.87380	6.92399	.89113	8.18553	45
46	954	.23226	680	.98301	409	.94216	142	.20999	46
47	983	.24343	708	.99708	438	.96040	171	.23459	47
48	.84012	.25464	737	6.01120	467	.97873	200	.25931	48
49	041	.26590	766	.02538	496	.99714	229	.28417	49
50	.84069	5.27719	.85795	6.03962	.87524	7.01565	.89258	8.30917	50
51	098	.28853	823	.05392	553	.03423	287	.33430	51
52	127	.29991	852	.06828	582	.05291	316	.35957	52
53	155	.31133	881	.08269	611	.07167	345	.38497	53
54	184	.32279	910	.09717	640	.09052	374	.41052	54
55	.84213	5.33429	.85939	6.11171	.87669	7.10946	.89403	8.43620	55
56	242	.34584	967	.12630	698	.12849	431	.46203	56
57	270	.35743	996	.14096	726	.14760	460	.48800	57
58	299	.36906	.86025	.15568	755	.16681	489	.51411	58
59	328	.38073	054	.17046	784	.18612	518	.54037	59
60	.84357	5.39245	.86083	6.18530	.87813	7.20551	.89547	8.56677	60

TABLE 61.—*Continued*

NATURAL VERSED SINES AND EXTERNAL SECANTS

M.	84° Vers.	84° Exsec.	85° Vers.	85° Exsec.	86° Vers.	86° Exsec.	M.
0	.89547	8.56677	.91284	10.47371	.93024	13.33559	0
1	576	.59332	313	.51199	053	.39547	1
2	605	.62002	342	.55052	082	.45586	2
3	634	.64687	371	.58932	111	.51676	3
4	663	.67387	400	.62837	140	.57817	4
5	.89692	8.70103	.91429	10.66769	.93169	13.64011	5
6	721	.72833	458	.70728	198	.70258	6
7	750	.75579	487	.74714	227	.76558	7
8	779	.78341	516	.78727	257	.82913	8
9	808	.81119	545	.82768	286	.89323	9
10	.89836	8.83912	.91574	10.86837	.93315	13.95788	10
11	865	.86722	603	.90934	344	14.02310	11
12	894	.89547	632	.95060	373	.08890	12
13	923	.92389	661	.99214	402	.15527	13
14	952	.95248	690	11.03397	431	.22223	14
15	.89981	8.98123	.91719	11.07610	.93460	14.28979	15
16	.90010	9.01015	748	.11852	489	.35795	16
17	039	.03923	777	.16125	518	.42672	17
18	068	.06849	806	.20427	547	.49611	18
19	097	.09792	835	.24761	576	.56613	19
20	.90126	9.12752	.91864	11.29125	.93605	14.63679	20
21	155	.15730	893	.33521	634	.70810	21
22	184	.18725	922	.37948	663	.78005	22
23	213	.21739	951	.42408	692	.85268	23
24	242	.24770	980	.46900	721	.92597	24
25	.90271	9.27819	.92009	11.51424	.93750	14.99995	25
26	300	.30887	038	.55981	779	15.07462	26
27	329	.33973	067	.60572	808	.14999	27
28	358	.37077	096	.65197	837	.22607	28
29	386	.40201	125	.69856	866	.30287	29
30	.90415	9.43343	.92154	11.74549	.93895	15.38041	30
31	444	.46505	183	.79278	924	.45869	31
32	473	.49685	212	.84042	953	.53772	32
33	502	.52886	241	.88841	982	.61751	33
34	531	.56106	270	.93677	.94011	.69808	34
35	.90560	9.59346	.92299	11.98549	.94040	15.77944	35
36	589	.62605	328	12.03458	069	.86159	36
37	618	.65885	357	.08404	098	.94456	37
38	647	.69186	386	.13388	127	16.02835	38
39	676	.72507	415	.18411	156	.11297	39
40	.90705	9.75849	.92444	12.23472	.94186	16.19843	40
41	734	.79212	473	.28572	215	.28476	41
42	763	.82596	502	.33712	244	.37196	42
43	792	.86001	531	.38891	273	.46005	43
44	821	.89428	560	.44112	302	.54903	44
45	.90850	9.92877	.92589	12.49373	.94331	16.63893	45
46	879	.96348	618	.54676	360	.72975	46
47	908	.99841	647	.60021	389	.82152	47
48	937	10.03356	676	.65408	418	.91424	48
49	966	.06894	705	.70838	447	17.00794	49
50	.90995	10.10455	.92734	12.76311	.94476	17.10262	50
51	.91024	.14039	763	.81829	505	.19830	51
52	053	.17646	792	.87391	534	.29500	52
53	082	.21277	821	.92999	563	.39274	53
54	111	.24932	850	.98651	592	.49153	54
55	.91140	10.28610	.92879	13.04350	.94621	17.59139	55
56	169	.32313	908	.10096	650	.69233	56
57	197	.36040	937	.15889	679	.79438	57
58	226	.39792	966	.21730	708	.89755	58
59	255	.43569	995	.27620	737	18.00185	59
60	.91284	10.47371	.93024	13.33559	.94766	18.10732	60

TABLE 61. — *Continued*

NATURAL VERSED SINES AND EXTERNAL SECANTS

M.	87° Vers.	87° Exsec.	88° Vers.	88° Exsec.	89° Vers.	89° Exsec.	M.
0	.94766	18.10732	.96510	27.65371	.98255	56.29869	0
1	795	.21397	539	.89440	284	57.26975	1
2	825	.32182	568	28.13917	313	58.27431	2
3	854	.43088	597	.38812	342	59.31411	3
4	883	.54119	626	.64137	371	60.39105	4
5	.94912	18.65275	.96655	28.89903	.98400	61.50715	5
6	941	.76560	684	29.16120	429	62.66460	6
7	970	.87976	714	.42802	458	63.86572	7
8	999	.99524	743	.69960	487	65.11304	8
9	.95028	19.11207	772	.97607	517	66.40927	9
10	.95057	19.23028	.96801	30.25758	.98546	67.75736	10
11	086	.34989	830	.54425	575	69.16047	11
12	115	.47093	859	.83623	604	70.62205	12
13	144	.59341	888	31.13366	633	72.14583	13
14	173	.71737	917	.43671	662	73.73586	14
15	.95202	19.84283	.96946	31.74554	.98691	75.39655	15
16	231	.96982	975	32.06030	720	77.13274	16
17	260	20.09838	.97004	.38118	749	78.94968	17
18	289	.22852	033	.70835	778	80.85315	18
19	318	.36027	062	33.04199	807	82.84947	19
20	.95347	20.49368	.97092	33.38232	.98836	84.94561	20
21	377	.62876	121	.72951	866	87.14924	21
22	406	.76555	150	34.08380	895	89.46886	22
23	435	.90409	179	.44539	924	91.91387	23
24	464	21.04440	208	.81452	953	94.49471	24
25	.95493	21.18653	.97237	35.19141	.98982	97.22303	25
26	522	.33050	266	.57633	.99011	100.11185	26
27	551	.47635	295	.96953	040	103.17574	27
28	580	.62413	324	36.37127	069	106.43114	28
29	609	.77386	353	.78185	098	109.89656	29
30	.95638	21.92559	.97382	37.20155	.99127	113.59301	30
31	667	22.07935	411	.63068	156	117.54440	31
32	696	.23520	440	38.06957	186	121.77803	32
33	725	.39316	470	.51855	215	126.32526	33
34	754	.55329	499	.97797	244	131.22229	34
35	.95783	22.71563	.97528	39.44820	.99273	136.51108	35
36	812	.88022	557	.92963	302	142.24061	36
37	841	23.04712	586	40.42266	331	148.46837	37
38	871	.21637	615	.92772	360	155.26228	38
39	900	.38802	644	41.44525	389	162.70325	39
40	.95929	23.56212	.97673	41.97571	.99418	170.88831	40
41	958	.73873	702	42.51961	447	179.93496	41
42	987	.91790	731	43.07746	476	189.98680	42
43	.96016	24.09969	760	.64980	505	201.22122	43
44	045	.28414	789	44.23719	535	213.85995	44
45	.96074	24.47134	.97819	44.84026	.99564	228.18385	45
46	103	.66132	848	45.45963	593	244.55402	46
47	132	.85417	877	46.09596	622	263.44269	47
48	161	25.04994	906	.74997	651	285.47948	48
49	190	.24869	935	47.42241	680	311.52297	49
50	.96219	25.45051	.97964	48.11406	.99709	342.77516	50
51	248	.65545	993	.82576	738	380.97230	51
52	277	.86360	.98022	49.55840	767	428.71873	52
53	307	26.07503	051	50.31290	796	490.10702	53
54	336	.28981	080	51.09027	825	571.95809	54
55	.96365	26.50804	.98109	51.89156	.99855	686.54960	55
56	394	.72978	138	52.71790	884	858.43689	56
57	423	.95512	168	53.57046	913	1144.91574	57
58	452	27.18417	197	54.45953	942	1717.87348	58
59	481	.41700	226	55.35946	971	3436.74682	59
60	.96510	27.65371	.98255	56.29869	1.00000	∞	60

TABLE 62

LENGTHS OF CIRCULAR ARCS TO RADIUS 1

Deg.	Length	Deg.	Length	Deg.	Length	Min.	Length	Sec.	Length
1	.0174533	61	1.0646508	121	2.1118484	1	.0002909	1	.0000048
2	.0349066	62	1.0821041	122	2.1293017	2	.0005818	2	.0000097
3	.0523599	63	1.0995574	123	2.1467550	3	.0008727	3	.0000145
4	.0698132	64	1.1170107	124	2.1642083	4	.0011636	4	.0000194
5	.0872665	65	1.1344640	125	2.1816616	5	.0014544	5	.0000242
6	.1047198	66	1.1519173	126	2.1991149	6	.0017453	6	.0000291
7	.1221730	67	1.1693706	127	2.2165682	7	.0020362	7	.0000339
8	.1396263	68	1.1868239	128	2.2340214	8	.0023271	8	.0000388
9	.1570796	69	1.2042772	129	2.2514747	9	.0026180	9	.0000436
10	.1745329	70	1.2217305	130	2.2689280	10	.0029089	10	.0000485
11	.1919862	71	1.2391838	131	2.2863813	11	.0031998	11	.0000533
12	.2094395	72	1.2566371	132	2.3038346	12	.0034907	12	.0000582
13	.2268928	73	1.2740904	133	2.3212879	13	.0037815	13	.0000630
14	.2443461	74	1.2915436	134	2.3387412	14	.0040724	14	.0000679
15	.2617994	75	1.3089969	135	2.3561945	15	.0043633	15	.0000727
16	.2792527	76	1.3264502	136	2.3736478	16	.0046542	16	.0000776
17	.2967060	77	1.3439035	137	2.3911011	17	.0049451	17	.0000824
18	.3141593	78	1.3613568	138	2.4085544	18	.0052360	18	.0000873
19	.3316126	79	1.3788101	139	2.4260077	19	.0055269	19	.0000921
20	.3490659	80	1.3962634	140	2.4434610	20	.0058178	20	.0000970
21	.3665191	81	1.4137167	141	2.4609142	21	.0061087	21	.0001018
22	.3839724	82	1.4311700	142	2.4783675	22	.0063995	22	.0001067
23	.4014257	83	1.4486233	143	2.4958208	23	.0066904	23	.0001115
24	.4188790	84	1.4660766	144	2.5132741	24	.0069813	24	.0001164
25	.4363323	85	1.4835299	145	2.5307274	25	.0072722	25	.0001212
26	.4537856	86	1.5009832	146	2.5481807	26	.0075631	26	.0001261
27	.4712389	87	1.5184364	147	2.5656340	27	.0078540	27	.0001309
28	.4886922	88	1.5358897	148	2.5830873	28	.0081449	28	.0001357
29	.5061455	89	1.5533430	149	2.6005406	29	.0084358	29	.0001406
30	.5235988	90	1.5707963	150	2.6179939	30	.0087266	30	.0001454
31	.5410521	91	1.5882496	151	2.6354472	31	.0090175	31	.0001503
32	.5585054	92	1.6057029	152	2.6529005	32	.0093084	32	.0001551
33	.5759587	93	1.6231562	153	2.6703538	33	.0095993	33	.0001600
34	.5934119	94	1.6406095	154	2.6878070	34	.0098902	34	.0001648
35	.6108652	95	1.6580628	155	2.7052603	35	.0101811	35	.0001697
36	.6283185	96	1.6755161	156	2.7227136	36	.0104720	36	.0001745
37	.6457718	97	1.6929694	157	2.7401669	37	.0107629	37	.0001794
38	.6632251	98	1.7104227	158	2.7576202	38	.0110538	38	.0001842
39	.6806784	99	1.7278760	159	2.7750735	39	.0113446	39	.0001891
40	.6981317	100	1.7453293	160	2.7925268	40	.0116355	40	.0001939
41	.7155850	101	1.7627825	161	2.8099801	41	.0119264	41	.0001988
42	.7330383	102	1.7802358	162	2.8274334	42	.0122173	42	.0002036
43	.7504916	103	1.7976891	163	2.8448867	43	.0125082	43	.0002085
44	.7679449	104	1.8151424	164	2.8623400	44	.0127991	44	.0002133
45	.7853982	105	1.8325957	165	2.8797933	45	.0130900	45	.0002182
46	.8028515	106	1.8500490	166	2.8972466	46	.0133809	46	.0002230
47	.8203047	107	1.8675023	167	2.9146999	47	.0136717	47	.0002279
48	.8377580	108	1.8849556	168	2.9321531	48	.0139626	48	.0002327
49	.8552113	109	1.9024089	169	2.9496064	49	.0142535	49	.0002376
50	.8726646	110	1.9198622	170	2.9670597	50	.0145444	50	.0002424
51	.8901179	111	1.9373155	171	2.9845130	51	.0148353	51	.0002473
52	.9075712	112	1.9547688	172	3.0019663	52	.0151262	52	.0002521
53	.9250245	113	1.9722221	173	3.0194196	53	.0154171	53	.0002570
54	.9424778	114	1.9896753	174	3.0368729	54	.0157080	54	.0002618
55	.9599311	115	2.0071286	175	3.0543262	55	.0159989	55	.0002666
56	.9773844	116	2.0245819	176	3.0717795	56	.0162897	56	.0002715
57	.9948377	117	2.0420352	177	3.0892328	57	.0165806	57	.0002763
58	1.0122910	118	2.0594885	178	3.1066861	58	.0168715	58	.0002812
59	1.0297443	119	2.0769418	179	3.1241394	59	.0171624	59	.0002860
60	1.0471976	120	2.0943951	180	3.1415927	60	.0174533	60	.0002909

ACKNOWLEDGMENTS AND EXPLANATION OF TABLES

Table No. 11 is taken from "Rules and Instructions for the Government of Maintenance of Way Employees," Louisville and Nashville Railroad Company.

Table No. 32 is taken from "Track," a publication by the Railroad Supply Company of Chicago.

Tables No. 33 and 34 are in substance taken from the standards of the Illinois Central Railroad Company but have been extended.

Tables No. 38 to 43 inclusive are taken from the standards of the Illinois Central Railroad Company.

Table No. 45 is taken from "Elements of Railroad Engineering," by William G. Raymond.

Tables No. 49, 50 and 51 were illustrated and arranged for this publication by Mr. James Elmo Smith, Instructor in Civil Engineering at the University of Illinois.

Table No. 52 is taken from "Engineer's Field Book," by Edward Butts.

Table No. 53 is also taken from "Engineer's Field Book," but represents only that portion of Mr. Butts' comprehensive curve tables that refers to the lengths of arcs and tangents of a one-degree curve.

Tables No. 54 to 61 inclusive are taken from "Field and Office Tables," by C. Frank Allen.

Table No. 62 is taken from Trautwine's "Engineer's Pocketbook."

The author wishes here to acknowledge his indebtedness for the permission to use the above information, without which the tables of this book must have been incomplete. The remaining tables are original, or if not original in conception, they have at least been originally computed.

Explanation of Tables

Table No. 1 represents a few convenient conversion multiples that need no explanation.

Tables No. 2, 3, 4, 5, 6, 7 and 10 are arranged in the same manner, and the explanation of Table No. 2 will suffice to make clear the others referred to. Having the decimals of an inch find the two decimals in the column of decimals

between which the given decimal lies. In the column of inches that quantity between these two tabular decimals is the nearest 64th of an inch to the given decimal. If it is desired to reduce a fraction of an inch to decimals, take the tabular decimal in the column adjacent to the fraction to the right of and above it, and add to it the first decimal in the first column of decimals.

Tables No. 8 and 9. If extreme accuracy of computation is desired, the decimal for the minutes may be taken from Table No. 9 and for seconds from Table No. 8, the sum of these two giving the exact decimal of degree corresponding to the minutes and seconds.

Table No. 10. If extreme accuracy is not required, the decimal of a degree may be taken directly from the table with no greater error than 9 seconds. As for most track work the nearest minute is sufficiently close, this table will serve with sufficient accuracy for all such work, and it is more convenient than Tables No. 8 and 9.

Table No. 11 gives the mid-ordinate for curving rails. The ordinate is given to the nearest eighth of an inch, which is deemed as close as the average trackman will be able to work.

Table No. 12 gives the elevation of the outer rail on curves for curves from a 30-minute to a 30-degree curve, and for velocities from 10 to 60 miles per hour. The elevation is given to the nearest eighth of an inch which is deemed as close as the trackman will work.

Table No. 13 is for use in widening gage on curves, and is in accordance with the recommendations of the American Railway Engineering and Maintenance of Way Association.

Table No. 14 gives the properties of frogs and split switches recommended by the American Railway Engineering and Maintenance of Way Association. The various parts of the frog and switch rail as indicated in this table are illustrated in Figure 66.

Table No. 15 shows the theoretical switch leads recommended by the American Railway Engineering and Maintenance of Way Association.

Table No. 16 gives the practical switch leads recommended by the American Railway Engineering and Maintenance of Way Association, and the various quantities of *this table* are illustrated by Fig. 66.

Tables No. 17 and 18 give the properties of frogs and switches, and theoretical and practical switch leads for rigid and spring frogs. They have been found to give satisfactory results under the test of service where 80-lb. rail and lighter rails are used.

Table No. 19 gives the co-ordinates for locating parallel sidings with a tape for frogs from No. 4 to 15 inclusive and for tracks from 12 to 20 feet center to center, with the rate of change of the different distances for $\frac{1}{10}$-foot change in spacing for tracks. This table is illustrated by Fig. 39.

Table No. 20 gives the distance between frog points measured parallel to either of the parallel tracks for crossovers between parallel tracks, using frogs of the same number and straight track between the heels of the frogs, for frogs from No. 4 to 15 inclusive and for track centers varying by six inches from 12 feet to 20 feet with the change in the frog distance for each $\frac{1}{10}$-foot change in the distance center to center of tracks.

Tables No. 21 and 22 give the frog distances measured parallel to either of the parallel tracks for crossovers between parallel tracks using frogs of different number and simple curve tangent to the heels of the frogs, with the rate of change of the frog distances for each $\frac{1}{10}$-foot change in the spacing of the tracks. These two tables should be used jointly to obtain the most economical spacings of the frogs, Table No. 22 being used where No. 21 leaves off, or vice versa. These tables are illustrated by Figs. 16 and 17, respectively.

Table No. 23 gives the frog distances measured parallel to the center of either of the parallel tracks for crossovers between parallel tracks, using frogs of the same number and reversed curve of equal radii tangent to the heels of the frogs, for frogs No. 6 to 10 inclusive, and for tracks spaced 16 to 60 feet center to center, with the rate of change of the different parts for accurate interpolation for change in the spacing center to center of tracks. This table is illustrated by Fig. 18.

Table No. 24 is similar to No. 23 except that frogs of different number are used and reversed curve of unequal radii is used tangent to the heels of the frog. This table covers the following combinations of frogs, 6–7, 6–8, 6–9, 6–9½,

6–10, 7–8, 7–9, 7–9½, 7–10, 8–9, 8–9½, and 8–10. This table is illustrated by Fig. 19.

Table No. 25 is fully illustrated by Fig. 2.

Table No. 26 gives the location of the frog point for turnouts from straight tracks into diverging spur tracks for frogs No. 6 to 10 inclusive, and for all angles from the frog angle to 130 degrees. In addition to giving the location of the frog, this table gives all of the important distances indicated in Fig. 9, and has various applications. The table is computed on the assumption that the degree of the connecting curve tangent to the heel of the frog and to the diverging spur is the same as the degree of the lead curve to the nearest even degree. The distance K from the point to the heel of the frog is assumed to be 8 feet, which will make the table practicable for use with the great majority of frogs at present in use on the various railroads. The Table gives the location of the frog with reference to the intersection of the extended center line of the spur track with the center line of the track from which the turnout is taken. It also gives the location of the frog with respect to the intersection of the extended center line of the spur track and the gage line of the rail of the track in which the frog is located. The table also gives the tangent distance to the connecting curve, the distance from the point of intersection of the center lines of the spur and principal track to the P. I., also the distance from the point of intersection of the center line of the spur and the gage line of the rail of the principal track to the P. I. of the connecting curve. So that by its use, the connecting curve may be run in and the frog located with only one setting-up of the transit on the principal track. If offsets are taken to the principal track, the frog may be properly located and the curve run in without setting up at all on this track. In the case of crossovers between parallel tracks, where different numbers of frogs are used with a simple curve connecting the frogs, if it is known that the spacing of the tracks is such as to bring the location of the frogs under the condition of Table No. 22, the frogs may be conveniently staked out by reference to Table No. 26. Thus, delta of Table No. 26 will be the frog angle of the frog of less number. With the location of either frog fixed, the procedure is evident. In case of *crossovers* between parallel tracks where either the same or

different numbers of frogs are used with reversed curve of equal or unequal radii tangent to the heels of the frogs, after determining the angle $(F + \phi)$, the frogs may be located by Table No. 26, $(F + \phi)$ corresponding to the delta of Table No. 26.

Tables No. 27, 28, 29 and 30 give bills of material for switch ties and crossover ties. These are based on the switch leads given in Tables No. 17 and 18, and where such leads are used are correct. For the switch leads recommended by the American Railway Engineering and Maintenance of Way Association and given in Table No. 16, it may be necessary to make slight changes in these tables of switch and crossover ties; but for the sake of preliminary estimates the tables are sufficiently accurate even when the American Railway Engineering and Maintenance of Way Association leads are used.

Table No. 31 gives the width of base of rail and tread for rails varying in weight from 30 to 100 pounds per linear yard. As the width of base of rail varies even for rail of the same weight, this table is accurate only for the particular section considered, but is in general sufficiently close for determining with what weight rail a track is laid.

Table No. 32 gives the quantity of materials, rails, ties and fastenings necessary to lay respectively one mile and 100 feet of track with rails varying in weight from 50 to 110 pounds per yard. Also the length and weight of the angle bars considered, together with the size of track bolts and the number of bolts per keg of 200 pounds.

Table No. 33 gives the cubic yards of ballast per mile and per 100 feet for single and double track for depths of ballast under the tie from 4 to 12 inches, and for different sizes and spacing of ties.

Table No. 34 gives the area of opening required for waterways draining various areas and for four different slopes of ground.

Table No. 35 gives the diameter, thickness of shell, weight per linear foot and weight per 12-foot section of cast iron culvert pipe. The weights and thickness of shell of cast iron culvert pipe vary with the pressure the pipes are estimated to withstand. Therefore, these quantities cannot be absolute; they are only approximate.

Table No. 36 gives the dimensions and cubic contents of head walls for cast iron pipe culverts, with formulas for determining the proper length of pipe for fills of different heights.

Table No. 37 gives the cubic contents per linear foot of the body of box culverts and the cubic contents of the wing walls with practical dimensions for the various parts of the culvert.

Table No. 38 gives the area of openings of arch culverts of radii varying from 4 to 20 feet and the cubic contents per linear foot of the body of the culverts with the cubic contents for square-end walls, straight-wing walls and 30-degree wing walls.

Tables No. 39, 40 and 41 give the weights of deck and through plate girders, with the distance center to center of the girders, the distance from base of rail to low iron, and from base of rail to the top of the masonry.

Table No. 42 consists of two curves showing the approximate contents of *T* and straight abutments for single track for various heights from base of rail to the ground.

Table No. 43 consists of six plates of cost curves, — first, single track, open deck, untreated frame trestles; second, single track, untreated, open deck, four and six pile trestles; third, single track, creosoted, open deck, four and six pile trestles; fourth, double track, open deck, untreated and treated ten pile trestles; fifth, single track, ballast floor, creosoted, four and six pile trestles; sixth, double track, ballast floor, creosoted ten pile trestles.

Tables No. 44 and 44A give the amount and interest at compound interest, capitalization, annual cost and equivalent cost for rates of interest of 4% and 5% and for periods of from 5 to 25 years inclusive. A definite example may be taken to best explain the use of these tables.

With interest rate for money at 5%, Table 44A, —

(1) To find the amount, principal plus interest, at compound interest, of $1000 for 14 years. From column "Amount," line 14,

$$\text{Amount} = \$1000 \times 1.98 = \$1980.$$

(2) To find the interest on $1000 at compound interest for 14 years. From the column "Interest," line 14,

$$\text{Interest} = \$1000 \times 0.98 = \$980.$$

(3) Given an accumulation of $1980 at compound interest at the end of 14 years; to find the principal or present value. From the column "Amount," line 14,

$$\text{Present Value} = \$1980 \div 1.98 = \$1000.$$

(4) To find the capital sum that at compound interest for 14 years will produce interest amounting to $980. From the column "Interest," line 14,

$$\text{Capital Sum} = \$980 \div 0.98 = \$1000.$$

(5) To find the total capitalization of a crosstie that costs $0.55 in the track and will last 7 years. From the column "Capitalization," line 7,

$$\text{Capitalization} = \$0.55 \times 3.456 = \$1.901.$$

(6) To find the annual cost of the tie given above. From the column "Annual Cost," line 7,

$$\text{Annual Cost} = \$0.55 \times 0.173 = \$0.095.$$

(7) To find how much may be paid for a crosstie lasting 16 years to show the same economy as a tie lasting 7 years and costing $0.55. From column 7, line 16,

$$\text{Equivalent Cost} = \$0.55 \times 1.873 = \$1.030.$$

(8) To find how much may be paid for a tie lasting 7 years to show the same economy as a tie lasting 16 years and costing $1.03. From Column 16, line 7,

$$\text{Equivalent Cost} = \$1.03 \times 0.534 = \$0.55.$$

(9) To find how long a crosstie should last that costs $1.03 in order to be as economical as a tie that costs $0.55 and lasts 7 years,

$$\$1.03 \div 0.55 = \$1.873.$$

Under column 7 the corresponding value is found on line 16. Therefore, the tie costing $1.03 should last 16 years to be as economical as the $0.55 tie lasting 7 years.

(10) To find how long a tie that costs $0.55 should last in order to be as economical as the tie costing $1.03 and lasting 16 years,

$$\$0.55 \div 1.03 = \$0.534.$$

Under column 16 the corresponding value is found on line 7. Therefore, the tie costing $0.55 should last 7 years.

(11) To compare the economy of a tie costing \$0.90 in the track and lasting 5 years with a steel tie costing \$2.44 in the track and lasting 25 years; the steel tie weighs originally 180 pounds and has remaining 40% of its original weight when it is renewed, the scrap value of the steel is \$11.00 per ton, and the interest rate on money is 4%.

From Table No. 44, Column 5, line 25, there may be given for a tie lasting 25 years,

$$\$0.9 \times 3.509 = \$3.158,$$

to be of equivalent value to one lasting 5 years and costing \$0.90. There is a salvage on the steel tie amounting to

$$(180 \div 2240) \times (0.40 \times \$11) = \$0.347$$

at the end of 25 years. The present value of this salvage is, from column "Amount," line 25,

$$\$0.347 \div 2.666 = \$0.13,$$

so that the present value of the steel tie may be considered

$$\$2.44 - \$0.13 = \$2.31.$$

The advantage of the steel tie is, therefore,

$$\$3.158 - \$2.31 = \$0.848,$$

where tie for tie is used.

(12) In cases where opinion prevails that it is necessary to use 20 steel ties to a 33-foot rail where 18 wooden ties answer the same purpose, then the advantage of the steel tie is

$$\frac{(\$3.158 \times 18) - (\$2.31 \times 20)}{20} = \$0.531 \text{ per tie.}$$

Or, a steel tie lasting 25 years having the salvage given above would have to cost more than \$2.84 before it becomes less economical than a wooden tie lasting 5 years and costing \$0.90.

Or, from the table, column 25, line 5, if the steel tie cost \$2.31, then, with equal economy tie for tie, there may be given for the five-year wooden tie,

$$\$2.31 \times 0.285 = \$0.658.$$

Or, where 20 steel ties were used to 18 wooden ties,

$$\$2.31 \times 0.285 \times \frac{20}{18} = \$0.731.$$

That is to say, the wooden tie lasting 5 years would have *to cost less* than \$0.73 to be more economical than the steel

tie lasting 25 years and costing $2.44 with the salvage assumed above.

Table No. 45 shows the velocity heads in feet for various velocities in miles per hour. To those familiar with the chapter on Rise and Fall in Wellington's Economic Theory of Railway Location, or to the treatment of this subject by W. G. Raymond in his "Elements of Railroad Engineering," this table needs no explanation. To those who are not familiar with either reference given, or similar works, an explanation would do no good.

Table No. 46. — General Geometric Problems arranged and illustrated for convenient reference.

Table No. 47. — General Trigonometric Formulæ arranged and illustrated for convenient reference.

Table No. 48. — General Properties of Triangles.

Table No. 49. — Simple Curve Formulæ — which as illustrated needs no further explanation.

Table No. 50. — Compound Curve Formulæ — which as illustrated needs no further explanation.

Table No. 51. — Reversed Curve Formulæ between parallel tangents and intersecting tangents, which as illustrated needs no further explanation.

Table No. 52. — Radii of curves for every minute, from 0 to 20 degree curves.

Table No. 53. — Tangents and Actual Arcs of a One-degree Curve for all minutes of intersection angle from 0 to 90 degrees.

Table No. 53A. — Corrections to be added to the tangent distances.

Table No. 54. — Logarithms of Numbers. Where there are more than four significant figures, the table of proportional parts will be found useful. The star opposite certain logarithms shows that the two figures at the left are to be taken from the line below.

Example. Required log of 6723.46.

For left 672 and top 3 the logarithm = .827563 and diff. = 65.

Table of prop. parts 65 gives	26 for 4
	4 for .6
	3.827593

the characteristic 3 being one less than the number of significant figures to the left of the decimal point, in 6723.46.

Example. To find number for log 2.672962.

Log of 4709	=	.672929
		33
Diff. = 92; for 3 prop. part	=	28
		5.
5 prop. part	=	4.6

Number is 470.935.

Table No. 55. — Logarithmic Sines, Cosines, Tangents, and Cotangents. In taking out degrees and minutes, use the minutes at the left with the degrees at the left, whether the degrees appear at top or at bottom of page; use the minutes at right in a similar way with the degrees at right. Use headings for Sin, Cos, Tan, Cot, as given at top with the degrees shown at top (whether right or left); use headings for Cos, Sin, Tan, Cot, as given at bottom with the degrees given at bottom (whether right or left). The difference for 1 second is given for every minute, and is to be multiplied by the number of seconds and the results added or subtracted.

For very small angles up to 5 degrees, where results precise for the nearest second are required, Table 56 should be used.

Table No. 56. — Auxiliary Table for Logarithmic Sines and Tangents of Small Angles. This table is computed upon the basis (approximately true) that the sines of small angles, or the tangents of small angles, are proportional to the angles themselves.

Example. Required log sin 0° 47′ 12″.

Then
$$\frac{\sin 47' 12''}{\sin 47'} = \frac{47' 12''}{47'}$$

$$\sin 47' 12'' = 47' 12'' \frac{\sin 47'}{47'} = 2832'' \frac{\sin 47}{2820''}$$

$$\begin{aligned} \log \sin \quad 47' &= 8.135810 \\ \log \quad 2820'' &= \underline{3.450249} \\ & 4.685561 \\ \log \quad 2832'' &= 3.452093 \\ \log \sin 47' 12'' &= \overline{8.137654} \end{aligned}$$

This auxiliary table gives for 47′, shown in the example *above, the* value of log sin 47′ − log 2820″ = 4.685561 as

appears above, and for each minute in similar fashion; the number given in the table, then, is to be added to the log of the required angle (given in seconds). It should be noted that the table gives the value of every minute in seconds. As above, 47′ = 2820″; whence also 47′ 12″ = 2832.″

Example. Required angle whose log sin = 8.325327.

Log sin 1° 13′ is the nearest (Table No. 55).

Required log sin	= 8.325327
Table No. 56 (sin) 1° 13′	= 4.685542
4363″ log	= 3.639785
or 1° 12′ 43″	= required angle.

Example. Required log sin 3° 19′ 34″.

Table No. 56, value for 3° 19′ (sin)	= 4.685332
3° 20′	= 4.685330
Interpolate tabular value for 3° 19′ 34″	= 4.685331
Then log 11974″	= 4.078239
log sin 3° 19′ 34″	= 8.763570

Table No. 57. — Logarithmic Versed Sines and External Secants. No explanation appears necessary.

Table No. 58. — It may be shown that vers $A = 2 \sin^2 \frac{1}{2} A$, whence it follows that for small angles it is approximately true that the vers of angles are as the squares of the angles themselves.

Example. $$\frac{\text{vers } 0° \, 41' \, 17''}{\text{vers } 0° \, 41'} = \frac{(0° \, 41' \, 17'')^2}{(0° \, 41')^2} = \frac{2477^2}{2460^2}$$

$$\text{vers } 0° \, 41' \, 17'' = 2477^2 \frac{\text{vers } 0° \, 41'}{2460^2}.$$

The tabular number for 0° 41′	= log vers 0° 41′ − log 2460^2
	= 9.070115
2 log 2477 = 3.393926 × 2	= 6.787852
log vers 0° 41′ 17″	= 5.857967

Example. Required angle whose log vers = 6.309065.

Log vers 1° 9′ is the nearest (Table No. 57).

Required log vers	= 6.309065
Table No. 58 (vers) 1° 9′	= 9.070105
	7.238960(2
4164″ log	= 3.619480
or 1° 09′ 24″	= required angle.

Similarly for external secants of small angles.

For exsec of 90° − small angles, it may be shown that

$$\text{exsec } A = \frac{\text{vers } A}{\cos A}$$

$$\text{exsec } 90° - A = \frac{\text{vers } 90° - A}{\cos 90° - A} = \frac{\text{vers } 90° - A}{\sin A}$$

where sin A may be taken from auxiliary tables.

Table No. 59. — Natural Sines and Cosines.

Table No. 60. — Natural Tangents and Cotangents.

Use the minutes at the left with the degrees at the top, and the minutes on the right with the degrees at the bottom.

Table No. 61. — Natural Versed Sines and External Secants. This requires no explanation.
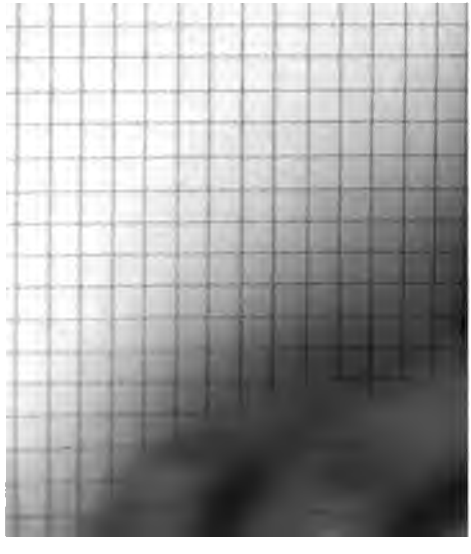
Table No. 62. — Lengths of Circular Arcs to Radius One. To find the length of arc for a given angle and radius. From the table take out the tabular quantities corresponding to the given degrees, minutes and seconds of intersection angle. The sum of these multiplied by the radius equals the required arc.